Advantage IV and *EB-Flow2* Product Lines

O&M MANUAL

Updated March 20, 2024

EBTRON, Inc.
1663 Hwy 701 South, Loris SC 29569
Toll Free: 1-800-2EBTRON (1-800-232-8766)
FAX: 1-843-756-1838
Internet: EBTRON.com

©2020 EBTRON, Inc. ALL RIGHTS RESERVED

O&M MANUAL

foreword

Thank you for choosing EBTRON airflow measurement equipment. EBTRON has been the leader in airflow measurement for monitoring and control since 1983. Our advanced thermal dispersion measurement technology has been copied by others but duplicated by none.

We are supported by an extensive, factory trained, ***local*** *representative network that is available to support all of your needs. We also provide toll-free factory support at 800-2EBTRON (232-8766), Monday through Thursday 8:00 AM to 4:30 PM and Friday 8:00 AM to 2:00 PM eastern time.*

Don't know who your local EBTRON representative is? Visit EBTRON.com and click on the REP FINDER button.

This manual has been developed as a comprehensive guide to our Advantage IV and *EB-Flow2* product lines. It is structured as a complete, single source, reference manual and contains the following information:

- FCC Part 15 Compliance Statement
- Section 1 – Installation
- Section 2 – Startup
- Section 3 – Custom Configuration
- Section 4 – Built-in Tools
- Section 5 – Diagnostics
- Section 6 – Troubleshooting
- Appendix A – Placement Guidelines
- Appendix B – Sensor Probe Installation Guides
- Appendix C – Transmitter Installation Guides
- Appendix D – Wiring Guides
- Appendix E – Startup Guides
- Appendix F – Network Registers and Object Lists
- Appendix G – Mechanical Drawings

The following symbols are used in this manual:

⚠ *IMPORTANT. The comment is very important and should not be ignored.*

ⓘ *INFORMATION. The comment provides additional information.*

SUGGESTION. The comment is a suggestion to the user.

EBTRON, Inc • 1663 Hwy 701 S., Loris, SC 29569 • Toll Free: 800-2EBTRON (232-8766) • Fax: 843-756-1838 • EBTRON.com

Advantage IV and *EB-Flow2* Product Lines

O&M MANUAL

FCC-Part 15 Compliance

ALL GTx116, GTx116e, GTx208e, GTx108, GTx108e and GTx204e Models contain transmitter module:
FCC ID: T9JRN4020 / IC: 6514A-RN4020

GTW116 and GTW108 Models also contain transmitter module:
FCC ID: OJM900MCA / IC: 5840A-900MCA

Altering the transmitter module(s) or using an antenna other than an Ebtron approved antenna with the transmitter module(s) could void the users' authority to operate the equipment.

Note: The OJM900MCA (IC: 5840A-900MCA) transmitter module has been co-location verified with the T9JRN4020 (IC: 6514A-RN4020).
The above transmitter enabled Ebtron models comply with Part 15 of the FCC rules and Industry Canada license-exempt RSS standards.
(The above transmitter module enabled Ebtron models complies with Industry Canada License-exempt RSS standards.)

Les modèles Ebtron activés pour le module émetteur ci-dessus sont conformes aux normes RSS exemptes de licence d'Industrie Canada.

All above models and the EF-x1000, EF-x2000, HTx104, HTx202 Ebtron models comply with Part 15 of the FCC rules and Industry Canada ICES-003. Operation of these devices is subject to the following two conditions:

1. This device may not cause harmful interference, and
2. This device must accept any interference received, including interference that may cause undesired operation.

This equipment has been tested and found to comply with the limits for a Class A digital device, pursuant to part 15 of the FCC Rules and Industry Canada ICES-003. These limits are designed to provide reasonable protection against harmful interference when the equipment is operated in a commercial environment. This equipment generates, uses, and can radiate radio frequency energy and, if not installed and used in accordance with the instruction manual, may cause harmful interferences to radio communications. Operations of this equipment in a residential area is likely to cause harmful interference in which case the user will be required to correct the interference at his own expense.

(All above Ebtron models are Class A digital apparatus and complies with Canadian ICES-003.

Operation of these devices is subject to the following two conditions: 1 This device may not cause harmful interference, and 2. This device must accept any interference received, including interference that may cause undesired operation.)

Tous les modèles Ebtron ci-dessus sont des appareils numériques de classe A et sont conformes à la norme ICES-003 canadienne. Le fonctionnement de ces appareils est soumis aux deux conditions suivantes: 1 Cet appareil ne doit pas provoquer d'interférences nuisibles, et 2. Cet appareil doit accepter toute interférence reçue, y compris les interférences susceptibles de provoquer un fonctionnement indésirable.

Under Industry Canada regulations, the noted radio transmitters may only operate using an antenna of a type and maximum (or lesser) gain approved for the transmitter by Industry Canada. To reduce potential radio interference to other users, the antenna type and its gain should be so chosen that the equivalent isotropically radiated power (e.i.r.p) is not more than that necessary for successful communication.

Conformément à la réglementation d'Industrie Canada, le présent émetteur radio peut fonctionner avec
une antenne d'un type et d'un gain maximal (ou inférieur) approuvé pour l'émetteur par Industrie Canada. Dans le but de réduire les risques de brouillage radioélectrique à l'intention des autres utilisateurs, il faut choisir le type d'antenne et son gain de sorte que la puissance isotrope rayonnée équivalente (p.i.r.e.) ne dépasse pas l'intensité nécessaire à l'établissement d'une communication satisfaisante.

EBTRON, Inc • 1663 Hwy 701 S., Loris, SC 29569 • Toll Free: 800-2EBTRON (232-8766) • Fax: 843-756-1838 • EBTRON.com

O&M MANUAL

Section 1 – Installation

1. SECTION OVERVIEW

This section provides installation and wiring instructions for Advantage IV and *EB-Flow2* remote transmitters.

1.1. SENSOR PROBES SUPPORTED

Transmitters in this manual support the following sensor probe types:

- -P duct/plenum probe
- -U universal mount probe
- -T terminal unit small duct probe
- -F fan inlet probe
- -B bleed sensor probe

1.2. SENSOR PROBE MOUNTING

1.2.1. Locating Probes

Sensor probe placement guidelines are located in the *Appendix A – Placement Guidelines* section at the end of this document.

ⓘ *If minimum placement guidelines cannot be achieved, installed accuracy may be compromised. Transmitters can be field adjusted to match a third-party measurement. Adjusted field measurements typically result in comparative readings within ±3% of the third-party measurement. Be advised that the third-party measurement may have uncertainties greater than or equal to ±10% and should only be used to adjust the airflow measurement device if the probes do not meet minimum placement requirements and the discrepancy is greater than the uncertainty of the third-party source.*

1.2.2. Installation

Installation guides for each probe type are located in the *Appendix B – Sensor Probe Installation Guides* section at the end of this document.

⚠ *Sensor probes must be mounted and spaced properly to achieve the specified installed accuracy.*

1.3. TRANSMITTER MOUNTING

Installation guides for each transmitter model are located in the *Appendix C – Transmitter Installation Guides* section at the end of this document.

Mount transmitters in a location protected from moisture, rain and snow with an ambient temperature between -20 and 120 °F [-28.9 to 48.9 °C]. Provide a weatherproof enclosure and mount away from direct sunlight when outdoor mounting is required.

Transmitters have an LCD and four-button user interface. Select a mounting location where the LCD and pushbutton interface are accessible during normal operation.

EBTRON, Inc • 1663 Hwy 701 S., Loris, SC 29569 • Toll Free: 800-2EBTRON (232-8766) • Fax: 843-756-1838 • EBTRON.com

The cover of the Advantage IV Gold Series transmitter hinges up for removal. The cover of the Advantage IV Hybrid Series transmitter slides up and out of the enclosure. The cover of the *EB-Flow2* transmitter is secured by four #1 Philips head screws.

⚠ *Make sure the transmitter is located where all of the cables from the sensor probes reach the transmitter.*

⚠ *Provide a minimum of 6.5 inches [165 mm] above Hybrid Series transmitters to allow for cover removal when slide out covers are provided.*

⚠ *Provide a minimum of 3 inches [76 mm] below all transmitters to connect cable plugs from the sensor probes.*

1.4. TRANSMITTER WIRING

Wiring guides for each transmitter model are located in the *Appendix D – Wiring Guides* section at the end of this document.

1.4.1. Probe Connections to Transmitter

Each probe has a tag on the cable plug and probe bracket/tube with a TAG ID set to the location name (NAME) provided at the time of order. If a location name is not provided the TAG ID is set to null (no value).

ⓘ *Multiple connector arrangements do not require probes be installed in each receptacle.*

⚠ *Sensor probe plugs are keyed and NOT twist-lock. Align the key and push the plug onto the transmitter receptacle. Twisting the connector onto the receptacle will cause damage and void warranty.*

Probes are “plug and play” and do not need to be connected to a specific receptacle for proper operation. However, use of the following connection convention simplifies sensor node location identification when using the EB-Link Reader or when viewing individual sensor node data using DIAGNOSTICS. Although not required, it is a good practice to install each probe in the corresponding connector. Probes should also be installed sequentially by the labeled probe number, top to bottom, left to right or vice versa in the duct, plenum or fan array.

Depending on the model, up to 8 sensor nodes can be provided in a single probe. A probe number is labeled on each probe hang tag (Probe x of y). The leftmost receptacle used on the transmitter when viewed from the display side is always designated as *Connector 1 (C1)*. Additional connectors increment sequentially from left to right on transmitters with more than one receptacle. Fan array models with two rows of 4 receptacles, increment left to right, *C1* to *C4* on the topmost row closest to the cover, then left to right, *C5* to *C8* on the lower most row.

⚠ *Fan array models (-F/An) must follow this convention if two probes are located in each fan inlet and the individual fan airflow rates are required and/or the fan alarm is enabled (i.e. put probes for fan 1 in C1 and C2, fan 2 in C3 and C4, etc.)*

Probe numbers (P1 to Py) are dynamically assigned by the transmitter after initial power up, left to right, based on the connector receptacle used. The sensor node furthest from the cable side of the probe on probes with more than one sensor node, is designated as “*Sensor Node 1”*.

EBTRON, Inc • 1663 Hwy 701 S., Loris, SC 29569 • Toll Free: 800-2EBTRON (232-8766) • Fax: 843-756-1838 • EBTRON.com

1.4.1.1. SPECIAL CONSIDERATIONS FOR DUAL LOCATION TRANSMITTERS

The number of locations is designated by the fourth digit in the model code of Advantage IV transmitters (ex. GTx1<u>1</u>6e is single location, GTx2<u>2</u>08e is dual location). *EB-Flow2* transmitters can be configured for two locations in the field.

Two location transmitters with two connectors use the leftmost connector when viewed from the display side as "Location 1" and the rightmost connector as "Location 2". Transmitters with 4 connectors use the leftmost two connectors as "Location 1" and the rightmost two connectors as "Location 2". Transmitters with 8 connectors use the top four connectors relative to the cover as "Location 1" and the bottom four connectors as "Location 2".

Probes have the suffix AMD-1 and AMD-2 appended to the TAG ID for "Location 1" and "Location 2" respectively for identification.

1.4.2. B.A.S. and Power Connections

B.A.S. and power connections for each transmitter model are located in the *Appendix D – Wiring Guides* section at the end of this document.

1.4.2.1. SIGNAL ISOLATION

<u>1.4.2.1.1. Advantage IV Models</u>

All Advantage IV transmitter models are provided with isolated analog output signals and network connections.

<u>1.4.2.1.2. *EB-Flow2* Models</u>

All *EB-Flow2* transmitter models are provided with non-isolated analog output signals and network connections.

Isolation is typically required and achieved by providing power with a transformer where the secondary is not connected to earth ground.

EBTRON can provide and optional signal isolator for RS-485 network applications.

1.5. POWER UP

Refer to *Section 2 – Startup* and the individual startup guides located in *Appendix E – Startup Guides* at the end of this document prior to moving the power switch to the "ON" position.

1.6. FOR MORE INFORMATION …

For toll-free factory support call 800-2EBTRON (232-8766), Monday through Thursday 8:00 AM to 4:30 PM and Friday 8:00 AM to 2:00 PM eastern time or contact your local representative.

EBTRON, Inc • 1663 Hwy 701 S., Loris, SC 29569 • Toll Free: 800-2EBTRON (232-8766) • Fax: 843-756-1838 • EBTRON.com

O&M MANUAL

Section 2 – Startup

2. SECTION OVERVIEW

This section discusses startup and basic operation. Advantage IV and *EB-Flow2* remote transmitters are "plug-and-play." Transmitters are designed to be fully functional at power-up. Field configuration is generally only required when factory default output signals and/or network parameters must be modified for the host building automation system or application controller.

2.1. PRE-POWER CHECKS

2.1.1. Sensor Probe Installation

Inspect and verify the following:

- ☐ The location where the probes are located meet or exceed EBTRON published placement guidelines for the sensor probe model and sensor density provided.

ⓘ *If minimum placement guidelines cannot be achieved, installed accuracy may be compromised. Transmitters can be field adjusted to match a third-party measurement. Adjusted field measurements typically result in comparative readings within ±3% of the third-party measurement. Be advised that the third-party measurement may have uncertainties greater than or equal to ±10% and should only be used to adjust the airflow measurement device if the probes do not meet minimum placement requirements and the discrepancy is greater than the uncertainty of the third-party source.*

Inspect and verify the following:

- ☐ The probes are properly spaced in the fan, duct or opening.
- ☐ The airflow directional arrow is pointing in the direction of airflow and the sensor probes are not twisted in the airstream.
- ☐ All sensor probes are properly connected to the transmitter.

2.1.2. B.A.S. and Other Connections

Advantage IV and EB-Flow2 product lines are available with a wide variety of interface options. The connectivity capability provided is indicated by the model code for the x placeholder in the model code. The base model codes are as follows:

- Advantage IV Product Line
  - Gold Series
    - GTx116
    - GTx116e
    - GTx208e
    - GTx108
    - GTx108e
    - GTx204e
  - Hybrid Series
    - HTx104
    - HTx202

EBTRON, Inc • 1663 Hwy 701 S., Loris, SC 29569 • Toll Free: 800-2EBTRON (232-8766) • Fax: 843-756-1838 • EBTRON.com

- *EB-Flow2* Product Line
    - EF Series
        - EF-x2000

The connectivity code x = {connectivity capability} is as follows:

- Analog Output Signals: x = A, C, M and W
- RS-485 Network Connection: x = B, C and N
- Ethernet Network Connection: x = B and M
- Lon Network Connection: x = F, L
- RF-Link Transceiver: x = W
- USB Datalogger: x = D, U

ⓘ *Some models support more than one connectivity type.*

2.1.2.1 TRANSMITTERS WITH ANALOG OUTPUT SIGNALS

Inspect and verify the following for each analog output used:

☐ Twisted pair signal wire has been run between the host control panel and the transmitter.

☐ Signal wiring is shielded and the shield has been properly terminated and grounded at one end only (typically at the host control panel).

⚠ *If twisted pair wire and/or shielded cable is not used, extraneous electrical noise can be picked up between the transmitter and host control panel. If a problem is suspected, measure and record the signal at the host control panel terminals with a test meter set to VDC (across the +/- terminals) for 0-5/ 0-10/1-5/2-10 output signals or DC current (in series with the + or - terminal) for 4-20mA output signals. Disconnect the signal wires from the transmitter and measure the signal across the appropriate transmitter output terminals. There should be no significant change in the reading.*

2.1.2.2. TRANSMITTERS WITH AN RS-485 NETWORK CONNECTION

Inspect and verify the following if the network connection is used:

2.1.2.2.1. Isolated RS-485 Networks

☐ A 3-conductor network cable meeting the BACnet or Modbus standard has been used and all three connections, NET +, NET - and NET COM are connected.

ⓘ *EBTRON Advantage IV transmitters have an isolated RS-485 connection. Simply connect to the network. EB-Flow2 transmitters have a non-isolated RS-485 connection. Isolation is achieved by powering EB-Flow2 transmitters with a 24V power source that is not connected to earth ground (i.e. the secondary on the 24 VAC transformer is not grounded).*

⚠ *If a 2-conductor network cable or other non-conforming cable is used, network speed, length and reliability may be compromised or network failure may occur. This is NOT a limitation of EBTRON network devices.*

2.1.2.2.2. Non-isolated RS-485 Networks

☐ A 2-conductor network cable meeting the BACnet or Modbus standard has been used and both connections, NET +, NET - are connected.

⚠ *If a non-conforming cable is used, network speed, length and reliability may be compromised or network failure may occur. This is NOT a limitation of EBTRON network devices.*

EBTRON, Inc • 1663 Hwy 701 S., Loris, SC 29569 • Toll Free: 800-2EBTRON (232-8766) • Fax: 843-756-1838 • EBTRON.com

☐ NET COM on Advantage IV transmitters is connected to earth ground.

⚠ *Do not connect NET COM on EB-Flow2 transmitters to earth ground.*

2.1.2.2.3. All RS-485 Networks

☐ All network devices are on a single “daisy-chain”.

☐ The first device on the chain is properly terminated for “fail safe bias”, preferred, or “end of line”.

ⓘ *The first device on the chain is often the B.A.S. control panel. If the first device on the chain is not the B.A.S. controller and fail-safe bias is required, EBTRON Advantage IV transmitters can be configured for the fail-safe bias termination. See appropriate wiring diagram for the transmitter provided in Section 1.*

☐ The last device on the chain is properly terminated for “end of line”.

ⓘ *If an EBTRON transmitter is the last device on the chain, set the end of line termination. See appropriate wiring diagram for the transmitter provided in Section 1.*

⚠ *Failure to properly terminate the network will result in network instability or network failure.*

2.1.2.3. TRANSMITTERS WITH AN ETHERNET NETWORK CONNECTION

Inspect and verify the following if the network connection is used:

☐ CAT5 or higher cable has been used for the Ethernet connection.

☐ The cables have been properly terminated with RJ-45 connectors and the connections have been tested prior to connection to the transmitter.

⚠ *Use of an improperly wired RJ-45 connector may cause damage to the Ethernet output circuit of the transmitter.*

2.1.2.4. TRANSMITTERS WITH A LON NETWORK CONNECTION

Lon transmitters use the “free topology” network.

Inspect and verify the following if the network connection is used:

☐ The network wire is as specified by Echelon (typically Belden 8471 cable or equivalent).

☐ The network wire pair has been properly terminated at the transmitter (polarity insensitive).

2.1.2.5. TRANSMITTERS WITH AN EBTRON RF-LINK CONNECTION

Transmitters with an EBTRON RF-Link card can communicate with EBTRON *Commissioner* or other RF-Link compatible EBTRON master transceivers.

Inspect and verify the following if the RF-Link card is provided:

☐ The antenna has been field installed and pointing upward. Install by screwing it into the SMA connector located on the top left of the transmitter enclosure.

ⓘ *Although the wireless radio does not require a clear line of sight between the transmitter and receiving device, a large mass of metal or another RF interference source could degrade signal strength and adversely affect the RF transmission. Note any obstructions between the transmitter*

EBTRON, Inc • 1663 Hwy 701 S., Loris, SC 29569 • Toll Free: 800-2EBTRON (232-8766) • Fax: 843-756-1838 • EBTRON.com

and receiving device and avoid placing the transmitter and receiving device between obstructions, whenever possible.

2.1.2.6. TRANSMITTERS WITH A USB DATA LOGGER CARD

Transmitters with a USB datalogger card write sensor data to a thumb-drive memory device. Inspect and verify the following:

- ☐ A USB thumb drive memory device is properly seated in the USB connector on the data logger card.

⚠ *To avoid data loss and/or damage do not insert or remove a thumb drive memory device into the USB connector on transmitter with the power switch in the "ON" position.*

2.1.3. Power Connections

Inspect and verify the following:

- ☐ 24 VAC power is connected to both power terminals of the transmitter.
- ☐ Multiple transmitters wired on a single transformer are wired "in-phase" between transmitters (L1 to L1 and L2 to L2).
- ☐ The power transformer has been sized for the total load of all of the devices connected.

2.1.3.1. *EB-FLOW2* TRANSMITTERS

Inspect and verify the following:

- ☐ The secondary of the 24 VAC transformer is not connected to ground.

⚠ *Grounding the power on the secondary side of the transmitter results in non-isolated output signal(s) which may result in ground loops, signal error, and/or damage to the transmitter. Do not use a grounded 24 VAC power source.*

ⓘ *Grounding the primary side of the transformer is not a problem as long as one leg of the secondary or a center tap of the secondary is not connected to ground.*

If devices requiring 24 VAC require grounding, use a separate transformer to power the transmitter(s).

2.2. POWER-UP

Move the power switch to the "ON" position. The transmitter will display the firmware version and conduct power-up diagnostics prior to normal operation. Power-up faults, if detected, are displayed on the display.

ⓘ *EF-x2000 transmitters do not have a power switch. The transmitter is energized when 24 V power is provided to the device.*

⚠ *If "live" power is connected to the EF-x2000 power terminals, take extreme caution not to contact other terminals or the any component on the circuit board. Connecting power to terminals other than the power terminals may damage the transmitter and void warranty. It is advised that the 24 V power source is not "live" when the power connections are made.*

EBTRON, Inc • 1663 Hwy 701 S., Loris, SC 29569 • Toll Free: 800-2EBTRON (232-8766) • Fax: 843-756-1838 • EBTRON.com

Inspect and verify the following:

- ☐ The supply voltage to the transmitters under full load (all power switches to “ON” with probes connected and any other devices on the same transformer at full power) is between 22.8 and 26.4 VAC.

After initial power-up, the transmitter is fully functional as an airflow and temperature measurement device. With the exception of network configuration and alarm settings, transmitters are “plug and play” and do not require additional setup unless modifications to the factory default settings are desired by the user.

2.2.1. Display Function

All transmitters are provided with an LCD display.

2.2.1.1. SINGLE LINE DISPLAYS

Single line, nonbacklit, 16-character liquid crystal displays (LCD).

ⓘ *All transmitter models except the GTx116e and GTx108e have a single line display.*

The display contrast is set at the factory. The factory setting can be adjusted on all single line transmitters by turning the contrast potentiometer. See the appropriate wiring diagram in Section 1 for the location of the contrast potentiometer for the model provided.

Single line displays can be configured for one or more views, depending on what information needs to be displayed. In addition to the measured sensor data, the transmitter name, location service(s), active alarms and/or system trouble conditions can be displayed. Factory defaults can be modified be the user (Section 3). Multiple views toggle every 3 seconds.

2.2.1.1.1. Single Location Transmitter Normal Operation

View is active when LCD NAME = ON (Default = OFF)

<	N	A	M	E	>									

View is active when LCD SERV = ON (Default = OFF)

<	S	E	R	V	>									

View is always active

#	#	#	#	#		C	F	M		#	#	.	#		F

Auto space.

View is active when LOW Airflow Alarm = Active

A	L	A	R	M	:	L	O	W		F	L	O	W		

View is active when HIGH Airflow Alarm = Active

A	L	A	R	M	:	H	I	G	H		F	L	O	W	

View is active when Fan Alarm = Active

A	L	A	R	M	:	F	A	N		#					

First fan to go into alarm.

View is active when TRBL = Active and LCD TRBL = ON

#	#		[	E	R	R	O	R		D	E	S	C	R	]

= Trouble Code.

Toggle through additional errors.

EBTRON, Inc • 1663 Hwy 701 S., Loris, SC 29569 • Toll Free: 800-2EBTRON (232-8766) • Fax: 843-756-1838 • EBTRON.com

2.2.1.1.2. Dual Location Transmitter Normal Operation

View is active when LCD NAME = ON (Default = OFF)

<	N	A	M	E	>									

View is always active

<	S	E	R	V	1	>								

View is always active

#	#	#	#	#		C	F	M		#	#	.	#		F

Auto space.

View is active when LOW Airflow Alarm = Active

A	L	A	R	M	:	L	O	W		F	L	O	W		

View is active when HIGH Airflow Alarm = Active

A	L	A	R	M	:	H	I	G	H		F	L	O	W	

Note: There is no fan alarm available on dual location units.

View is always active

<	S	E	R	V	2	>								

View is always active

#	#	#	#	#		C	F	M		#	#	.	#		F

Auto space.

Note: There is no airflow alarm for location 2.

Note: There is no fan alarm available on dual location units.

View is active when TRBL = Active and LCD TRBL = ON

#	#		[	E	R	R	O	R		D	E	S	C	R	]

= Trouble Code.

Toggle through additional errors.

2.2.1.2. DUAL LINE DISPLAYS

Dual line, backlit, 16-character x 2 row, liquid crystal displays (LCD).

ⓘ *Only the GTx116e and GTx108e have a dual line display.*

The display contrast is set at the factory. The factory setting can be adjusted by simultaneously pressing the ESC and ↓ pushbuttons. Change the contrast by pressing the ↑ or ↓ arrows. Press ENT to accept the changes or ESC to ignore the changes. The display will toggle through two views every 3 seconds.

ⓘ *The contrast will return to the factory default setting if the RESET ALL function is performed on the transmitter. See section 5 for more information.*

View 1

S	E	T		C	O	N	T	R	A	S	T		↑	↓
E	N	T		A	C	C	E	P	T		N	E	W	

View 2

S	E	T		C	O	N	T	R	A	S	T		↑	↓
E	S	C		N	O		C	H	A	N	G	E	S	

EBTRON, Inc • 1663 Hwy 701 S., Loris, SC 29569 • Toll Free: 800-2EBTRON (232-8766) • Fax: 843-756-1838 • EBTRON.com

2.2.1.2.1. Single Location Transmitters without /H humidity Sensor Option Normal Operation

View is active when LCD NAME = ON (Default = OFF)

<	N	A	M	E	>									

View is always active

<	S	E	R	V	>										Not visible when LCD SERV = OFF.
#	#	#	#	#		C	F	M		#	#	.	#		F	Auto space.

View is active when LOW or HIGH Airflow Alarm = Active

A	L	A	R	M	:	L	O	W		F	L	O	W			Not visible when low flow alarm is inactive.
A	L	A	R	M	:	H	I	G	H		F	L	O	W		Not visible when high flow alarm is inactive.

View is active when Fan Alarm = Active

A	L	A	R	M	:	F	A	N		#						First fan to go into alarm.

View is active when TRBL = Active and LCD TRBL = ON

#	#		[	E	R	R	O	R		D	E	S	C	R	]	## = First Trouble Code.
#	#		[	E	R	R	O	R		D	E	S	C	R	]	## = Second Trouble Code, if applicable.

Toggle through additional errors.

2.2.1.2.2. Single Location Transmitters with the /H humidity sensor option

View is active when LCD NAME or LCD SERV = ON

<	N	A	M	E	>										Not visible when LCD NAME = OFF
<	S	E	R	V	>										Not visible when LCD SERV = OFF

View is always active when RHCONFIG=RH

#	#	#	#	#		C	F	M		#	#	.	#		F	Auto space.
										#	#	#	%	R	H	HCONFIG = RH

View is always active when RHCONFIG=DPT

#	#	#	#	#		C	F	M		#	#	.	#		F	Auto space.
#	#	#		F		D	P	T		#	#	#	%	R	H	HCONFIG = DPT

View is always active when RHCONFIG=ENTH

#	#	#	#	#		C	F	M		#	#	.	#		F	Auto space.
#	#	#		B	t	u	/	l	b	#	#	#	%	R	H	HCONFIG = ENTH

Alarm View: View is active when LOW or HIGH Airflow Alarm = Active

A	L	A	R	M	:	L	O	W		F	L	O	W			Not visible when low flow alarm is inactive.
A	L	A	R	M	:	H	I	G	H		F	L	O	W		Not visible when high flow alarm is inactive.

Alarm View: View is active when Fan Alarm = Active

A	L	A	R	M	:	F	A	N							

View is active when TRBL = Active and LCD TRBL = ON

#	#		[	E	R	R	O	R		D	E	S	C	R	]	## = First Trouble Code.
#	#		[	E	R	R	O	R		D	E	S	C	R	]	## = Second Trouble Code, if applicable.

Toggle through additional errors.

EBTRON, Inc • 1663 Hwy 701 S., Loris, SC 29569 • Toll Free: 800-2EBTRON (232-8766) • Fax: 843-756-1838 • EBTRON.com

2.2.1.2.3. Dual Location Transmitters without the /H humidity sensor option

View is active when LCD NAME = ON (Default = OFF)

<	N	A	M	E	>								

View is always active

<	S	E	R	V	1	>								Not visible when LCD SERV = OFF.
#	#	#	#	#		C	F	M		#	#	.	#	F	Auto space.

View is active when LOW or HIGH Airflow Alarm = Active

A	L	A	R	M	:	L	O	W		F	L	O	W		Not visible when low flow alarm is inactive.
A	L	A	R	M	:	H	I	G	H		F	L	O	W	Not visible when high flow alarm is inactive.

Note: There is no fan alarm available on dual location units

View is always active

<	S	E	R	V	2	>								Not visible when LCD SERV = OFF.
#	#	#	#	#		C	F	M		#	#	.	#	F	Auto space.

Note: There is no airflow alarm for location 2

Note: There is no fan alarm available on dual location units

View is active when TRBL = Active and LCD TRBL = ON

#	#		[	E	R	R	O	R		D	E	S	C	R	]	## = First Trouble Code.
#	#		[	E	R	R	O	R		D	E	S	C	R	]	## = Second Trouble Code, if applicable.
																Toggle through additional errors.

2.2.1.3. ALL TRANSMITTERS

Inspect and verify the following:

- ☐ The transmitter is displaying airflow and temperature (GTx116e transmitters with an optional /H sensor probe also display relative humidity).
- ☐ No error codes are displayed on the LCD.

ⓘ *Dual location transmitters toggle between locations. Press ENT to hold the current displayed location and ESC to return to toggle mode. If ESC is not pressed within 60 seconds the display will revert back to toggle mode.*

Use the factory default settings when possible. Factory default settings simplify startup, checkout and verification of the measuring device.

2.2.2. Transmitter Configuration

Transmitters do not require any system configuration for operation unless the following is required:

- ☐ SI (international) system of units: m, m/s, L/s, °C in lieu of I-P (US customary units): ft, FPM, CFM °F
- ☐ An analog output signal of 0-5 or 0-10 VDC is required.
- ☐ Dual location operation (*EB-Flow2* devices only).
- ☐ Enthalpy or dewpoint is the desired output of GTx116e transmitters with the optional /H relative humidity sensor installed in the sensor probe.

EBTRON, Inc • 1663 Hwy 701 S., Loris, SC 29569 • Toll Free: 800-2EBTRON (232-8766) • Fax: 843-756-1838 • EBTRON.com

2.2.2.1. SYSTEM OF UNITS

The transmitter is factory set to I-P system of units. Set the system of units (SYS) to SI if required. See Section 3 for more information.

Verify the following:

☐ The transmitter is displaying airflow and temperature in the proper system of units.

⚠ *Changing the system of units restores factory default settings. Modifications made by the user are lost.*

2.2.2.2. DUAL LOCATION OPERATION

2.2.2.2.1. Advantage IV Product Line

Advantage IV models having the number 2 in the fourth digit of the transmitter model code are configured for two measurement locations.

2.2.2.2.2 *EB-Flow2* Product Line

EB-Flow2 remote transmitters support two measurement locations. *EB-Flow2* transmitters serving two measurement locations must be configured for 2 locations for dual location operation. Set the LOCATIONS parameter to 2. The locations parameter is located in the GLOBAL submenu of the SETTINGS menu. See Section 3 for more information.

Verify the following:

☐ The LOCATIONS parameter is set to 2.

⚠ *Changing the transmitter from 1 to 2 locations, or vice versa, restores factory default settings for the system of units selected. Modifications made by the user are lost.*

2.2.2.2.3. All Product Lines

Inspect and verify the following:

☐ The probes are connected to the transmitter properly for two locations. See Section 1 for more information.

⚠ *Dual location applications require that the probes are installed in the proper locations and properly connected to the transmitter.*

2.2.2.3. SETUP WIZARDS

-F, -U and -B probe types are shipped with the area parameter(s) set to {null} (unknown). If volumetric airflow, CFM [L/s], is required, the area parameters must be determined. The -F/An fan array probe type has a fan array wizard (FAN WIZ) to configure the number of fans and facilitate area parameter entry. All other probe types have an area setup wizard (AREA WIZ) to facilitate area parameter determination.

Wizards are accessed from the TOOLS menu. See Section 4 for more information.

2.2.2.4. FREE AREA VERIFICATION

☐ Verify the area parameter, AREA, matches the actual area where the probes are installed.

ⓘ *The free area for -P, -U, -T and -B probes is the duct or opening area where the probes are mounted, less any internal insulation (i.e. the probe blockage does not affect the area calculation).*

EBTRON, Inc • 1663 Hwy 701 S., Loris, SC 29569 • Toll Free: 800-2EBTRON (232-8766) • Fax: 843-756-1838 • EBTRON.com

The free area for -F fan inlet probes is the area calculated at the leading (upstream) edge of the sensor housing where the probes are mounted (i.e. the probe blockage does not affect the area calculation).

If factory default settings have not been changed in the field, the area parameter will match the area printed on the hang tag of the sensor probes (exception: -F, -U and -B probe types).

Conversion of the velocity to volumetric airflow requires that the proper area of the measurement location is used.

If the actual area is different, modify the area parameter and record the new size and area.

TABLE 2-1 QUICK AREA CALCULATIONS, sq ft [sq m]
W=Width, H=Height, D=Diameter
W, H and D are in inches [mm]

Opening Shape	I-P	SI
Square or Rectangular	0.006944xWxH	0.000001xWxH
Round	0.005454xDxD	0.0000007854xDxD
Flat Oval	0.006944xWxH - 0.00149xHxH	0.000001xWxH - 0.0000002146xHxH

2.2.3. Transmitters with Analog Output Signals

Airflow measurement devices are typically used to determine the volumetric airflow rate in CFM [L/s]. The following procedure assumes that the desired measurement at the B.A.S. is CFM [L/s].

2.2.3.1. ANALOG OUTPUT SIGNAL TYPE AND RANGE

Verify the following:

- ☐ Verify that the analog input configuration of the B.A.S. matches the output configuration of the transmitter.

The AOUT parameter firmware setting can be viewed/modified using the shortcut sequences below or through the Settings Menu. See Section 3 for more information.

Simultaneously press the ESC and ↑ pushbuttons during normal operation to quickly verify the setting for AOUT. Some models have an additional prompt to instruct the user to modify jumpers and/or switches on the circuit board or option card.

Use the output test tool provided in the TOOLS menu to set a fixed output signal to verify that each of analog output signal is converted properly by the B.A.S. See Section 4 for more information.

Failure to properly configure the output signal will result in significant measurement error at the B.A.S.

2.2.3.1.1. Advantage IV Gold Series Models (Except GTx116e and GTx108e)

The output is set by switches SW1 and SW2 on the output card provided with the transmitter for voltage (VDC) or current (mA). If a switch is set for voltage, only the corresponding voltage options of 0-5V or 0-10V will be available. If a switch is set for current, only 4-20mA will be available.

EBTRON, Inc • 1663 Hwy 701 S., Loris, SC 29569 • Toll Free: 800-2EBTRON (232-8766) • Fax: 843-756-1838 • EBTRON.com

The AOUT1 and AOUT2 parameter shortcut (ESC and ↑) views are shown below.

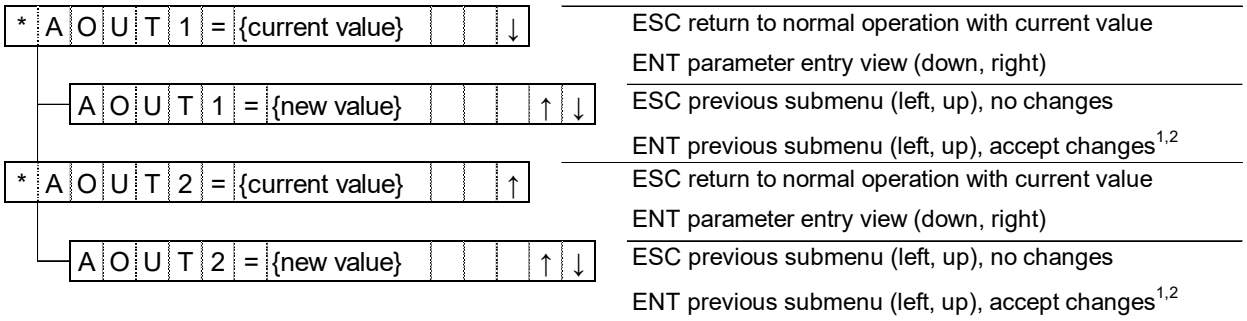

[1]If AOUT# (# = 1 or 2) is a change in output TYPE from voltage to current, toggle through the following views

View 1

S	E	T		S	W	#		T	O		m	A			

View 2

E	N	T		W	H	E	N		D	O	N	E			

[2]If AOUT# (# = 1 or 2) is a change in output TYPE from current to voltage, toggle through the following views

View 1

S	E	T		S	W	#		T	O		V	D	C		

View 2

E	N	T		W	H	E	N		D	O	N	E			

2.2.3.1.2 Advantage IV Gold Series Models (GTx116e and GTx108e)

The output is set by the AOUT parameter in firmware. No switches or jumpers are used. The AOUT parameter shortcut (ESC and ↑) view is shown below and applied to all analog output signals.

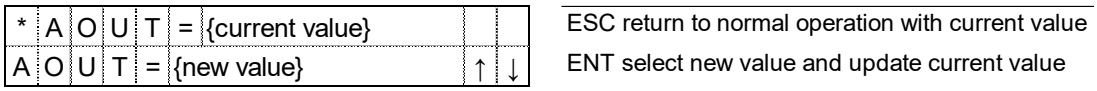

2.2.3.1.3. Advantage IV Hybrid Models

The output is set by the AOUT parameter in firmware and the position of output jumpers OUT1 and OUT2.

⚠ *Failure to properly set the output jumpers will result in a significant error in the output signal from the transmitter.*

The AOUT parameter shortcut (ESC and ↑) sequence is shown on the next page.

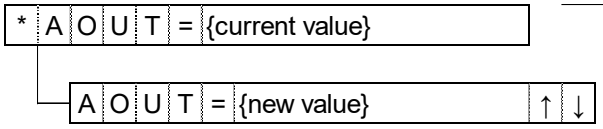

ESC return to normal operation with current value
ENT parameter entry view (down, right)
ESC previous submenu (left, up), no changes
ENT previous submenu (left, up), accept changes[1,2]

[1]If AOUT is changed to current, toggle through the following views:

View 1

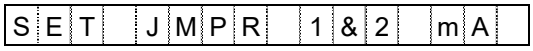

View 2

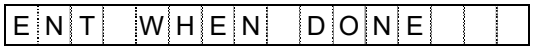

[2]If AOUT is changed to voltage, toggle through the following views:

View 1

View 2

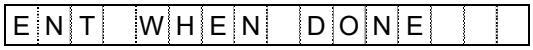

2.2.3.1.4. *EB-Flow2* Models

The output is set by the AOUT parameter in firmware. No switches or jumpers are used. The AOUT parameter shortcut (ESC and ↑) sequence is shown below and applied to all analog output signals.

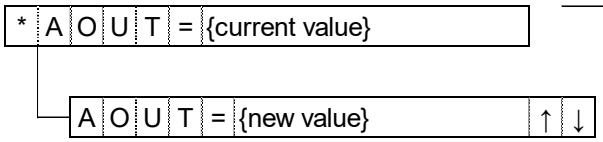

ESC return to normal operation with current value
ENT parameter entry view (down, right)
ESC previous submenu (left, up), no changes
ENT previous submenu (left, up), accept changes

2.2.3.2. ANALOG OUTPUT SCALING

The analog output units of measure and full-scale readings can be modified in the field. EBTRON measurement devices have percent of reading, not percent of full scale accuracy. There is often no benefit of modifying the factory default settings with today's high-performance application controllers. Multiply the default full scale velocity by the free area of the measurement location to determine the full-scale CFM [L/s] for the B.A.S.

☐ Verify that the offset or minimum scale used by the B.A.S. is equal to zero.

2.2.3.2.1. Analog Output Units of Measure, AO1 UM = FPM [m/s]

☐ Verify that the span or full scale used by the B.A.S. is equal to: AO1 FS x AREA

2.2.3.2.2. Analog Output Units of Measure, AO1 UM = CFM [L/s]

☐ Verify that the span or full scale used by the B.A.S. is equal to: AO1 FS

2.2.3.2.3. All Analog Output Transmitters

☐ Verify that the airflow reading at the B.A.S. matches the analog output signal converted to CFM [L/s] of the transmitter.

TABLE 2-2 MANUAL VERIFICATION OF AIRFLOW ANALOG OUTPUT SIGNALS TO CFM [L/s] V_{Out}=measured voltage, VDC, across +/- output terminals of transmitter I_{Out}=measured current, mA, in series circuit (remove + signal wire)* **Note: If current is measured in Amps, not mA, multiply reading from meter by 1,000.*		
Output Signal	**Units of Measure configured to FPM [m/s]**	**Units of Measure configured to CFM [L/s]**
0-5 VDC	V_{Out} / 5 x FS x AREA	V_{Out} / 5 x FS
0-10 VDC	V_{Out} / 10 x FS x AREA	V_{Out} / 10 x FS
1-5 VDC	(V_{Out} - 1) / 4 x FS x AREA	(V_{Out} - 1) / 4 x FS
2-10 VDC	(V_{Out} - 2) / 8 x FS x AREA	(V_{Out} - 2) / 8 x FS
4-20 mA	(I_{Out} - 4) / 16 x FS x AREA	(I_{Out} - 4) / 16 x FS

2.2.4. Transmitters with an RS-485 Network Connection

Verify the following if an RS-485 network connection is used:

☐ The proper network protocol, BACnet or Modbus, is selected for the transmitter.

☐ The transmitter network settings are configured by the network integrator for the protocol used.

☐ The transmitter network communication is enabled by setting RS485 COM to ON.

ⓘ *Consult the BACnet object list or Modbus register map for available variables and variable structure.*

Do not set enable transmitter network communications until the transmitter network settings are properly configured to avoid addressing conflicts.

2.2.5. Transmitters with an Ethernet Network Connection

BACnet IP and Modbus TCP is always enabled on Ethernet transmitters unless BACnet Ethernet is selected, in which case, BACnet Ethernet is enabled and BACnet IP is disabled.

Verify the following if an Ethernet network connection is used:

☐ The proper network protocol, BACnet IP or BACnet Ethernet, is selected if BACnet is used.

☐ The transmitter network settings are configured by the network integrator for the protocol used.

ⓘ *Consult the BACnet object list or Modbus register map for available variables and variable structure.*

2.2.6. Transmitters with LON Network Connection

LON transmitters are provided with a full featured LonWorks compatible interface.

A “Service” push-button is provided for device commissioning. Once the device is recognized commissioning can be completed by uploading the parameters from the device.

EBTRON, Inc • 1663 Hwy 701 S., Loris, SC 29569 • Toll Free: 800-2EBTRON (232-8766) • Fax: 843-756-1838 • EBTRON.com

Download the appropriate external interface file (.xif) if required by the installation software.

- GTF108e Transmitter: https://ebtron.com/wp-content/uploads/software/EBTRON_108e.xif
- GTF116e Transmitter: https://ebtron.com/wp-content/uploads/software/EBTRON_116e.xif

A “Wink” LED is provided for easy device identification.

An “Activity” LED and separate transmit and receive “TX” and “RX” indicators provide visual indication of transmitter and communication status. The “Activity” LED flashes on for 1 second, off for 1 second when the card is commissioned and online. The “Activity” LED remains illuminated constantly if there is an error.

2.2.7. Transmitters with a RF-Link Wireless Connection

The RF-Link connects the transmitter to an EBTRON *Commissioner* or other RF-Link compatible EBTRON master transceiver. The transmitter and transceiver must be paired prior to use.

Step 1 – Make sure the master transceiver is ON and in the ADD DEVICE mode.

Step 2 – Navigate to the RF-LINK setting submenu and set the RFLINK COM parameter to ON to initiate pairing. See Section 3 for more information.

*Setting RFLINK COM to ON will initiate pairing between the transmitter and the EBTRON master transceiver. The transmitter will display "CONNECTING" during pairing. When the connection is made "CONNECTED" will be displayed. If the connection fails "CON FAILED" will be displayed. Press ENT or ESC after pairing to return to submenu prompt for RFLINK COM. If the connection was successful, *RFLINK COM=ON will be displayed.*

Do not have multiple master transceivers in the ADD DEVICE mode at the same time.

2.2.8. Transmitters with a USB Data Logger

Transmitters with a USB data logger log sensor node data at 5-minute intervals using Universal Time Coordinated (UTC) based on an onboard real-time clock, whenever power is applied to the transmitter. Data files are automatically appended on power-up. The time zone and interval can be modified by the user using EB-Link software.

2.2.8.1. INSERTING A USB MEMORY DEVICE (“THUMB DRIVE”)

Install the USB memory device into the USB connector on the option card to start logging data.

It is a good practice to set the transmitter power switch to the “OFF” position before inserting the thumb drive memory device.

The USB port must be enabled to log data. Transmitters are shipped with the USB port parameter USB WRITE set to “ON”, which enables the port.

If the transmitter had been previously used to log data, the USB WRITE parameter would most likely have been set to “OFF”. To enable the USB WRITE parameter and start logging data, press the ↑↓ arrow buttons simultaneously to enter the MAIN MENU. The SETTINGS menu is displayed. Press the ENT button to select the top of the SETTINGS submenu category. Press the ↓ button until the USB submenu category is visible. Press the ENT button again to enter the USB submenu. Set the USB WRITE parameter to “ON”.

EBTRON, Inc • 1663 Hwy 701 S., Loris, SC 29569 • Toll Free: 800-2EBTRON (232-8766) • Fax: 843-756-1838 • EBTRON.com

2.2.8.2. REMOVING A USB MEMORY DEVICE

Remove the USB memory device from the USB connector on the option card after data logging is complete and the USB port has been disabled by setting the USB WRITE parameter to “OFF”.

Disable the USB port to stop logging data. Press the ↑↓ arrow buttons simultaneously to enter the MAIN MENU. The SETTINGS menu is displayed. Press the ENT button to select the top of the SETTINGS submenu category. Press the ↓ button until the USB submenu category is visible. Press the ENT button again to enter the USB submenu. Set the USB WRITE parameter to “OFF”.

⚠ *Always set the USB WRITE parameter to “OFF” before removing the USB memory device to avoid data loss/and or damage.*

Remove the USB memory device.

It is a good practice to set the transmitter power switch to the “OFF” position before removing the USB memory device.

2.3. AIRFLOW MEASUREMENT VERIFICATION

In many installations, third-party airflow verification is required. It is recommended that all third-party verifiers have a thorough understanding of the installation requirements and operation of the EBTRON product being verified. The following is EBTRON’s recommended procedure for third-party airflow verification.

2.3.1. Assess the Installation

Third-party verifiers should ensure the following prior to field verification.

- ☐ Verify that the airflow directional arrow is pointing in the direction of airflow.
- ☐ Verify that the sensor node openings are in the direction of airflow and not twisted in the airstream.
- ☐ Verify that the area entered in the transmitter matches the actual area of the duct or opening where the AMD is located.
- ☐ Verify that no active trouble codes are visible on the display.
- ☐ Verify that field adjustment has not been enabled in the transmitter.

Use the EB-Link Reader phone application to verify the area, trouble code status and field adjustment status on Gold Series transmitters.

Correct installation issues, enter the proper area (see Section 3), address any active trouble codes and disable field adjustment before proceeding.

- ☐ Determine if probes meet or exceed EBTRON’s minimum placement guidelines.

ⓘ *The airflow rate indicated on the transmitter LCD (and that viewed on the EB-Link Reader) should be within the published installed accuracy of the product provided when probes meet or exceed EBTRON’s minimum placement guidelines.*

⚠ *If the probes do not meet the minimum placement guidelines, the installed accuracy may exceed the published installed accuracy of the product provided and field adjustment may be required.*

EBTRON, Inc • 1663 Hwy 701 S., Loris, SC 29569 • Toll Free: 800-2EBTRON (232-8766) • Fax: 843-756-1838 • EBTRON.com

2.3.2. Assess the Verification Technique

2.3.2.1. DUCT SYSTEMS AND FAN MEASUREMENT

Ducted field measurements with handheld instruments can yield accuracies of 5% to 10% when an adequate straight run of duct is available. Applications having multiple airflow measuring devices in the same air path can compare one airflow measurement device to the other as part of the verification method.

Set the system for 100% recirculation and compare the supply airflow measurement device to the return airflow measurement device. Verify the measurement in the best location for the field measurement device.

Set the system for 100% outdoor air and compare the supply airflow measurement device to the outdoor airflow measurement device. Verify the measurement in the best location for the field measurement device.

2.3.2.2. OUTDOOR AIR INTAKES

Direct field measurement of close-coupled outdoor air intakes can approach and exceed 25%. Indirect measurement techniques to determine the outdoor airflow rate using the difference between the supply and return airflow rates or the ratios of the return air, outdoor air and mixed air (or supply air) temperatures should be avoided since uncertainties almost always exceed 25%.

2.3.3. Adjust or Verify?

If the airflow measuring device is within the measurement uncertainty of the verification technique, EBTRON strongly recommends that no field adjustment correction is made. EBTRON airflow measurement devices are factory calibrated to NIST traceable standards. Field adjustment is not required when installed in accordance to published guidelines.

If field adjustment is required, a gain and/or offset adjustment can be made to the output of the device by manual entry (Section 3) or by using the Flow Adjust Wizard (Section 4).

If a one-point adjustment is made, make a gain adjustment rather than an offset adjustment to match the device to the third-party reading.

Do not make an area adjustment in lieu of a gain adjustment since area is used to verify proper setup of the airflow measurement device.

2.4. FOR MORE INFORMATION …

Congratulations! Your EBTRON airflow measurement device is fully operational.

For toll-free factory support call 800-2EBTRON (232-8766), Monday through Thursday 8:00 AM to 4:30 PM and Friday 8:00 AM to 2:00 PM eastern time or contact your local representative.

O&M MANUAL

Section 3 – Custom Configuration

3. SECTION OVERVIEW

This section discusses access to the settings menu and menu navigation for custom configuration. It includes a table of the factory default settings, optional settings and ranges. A detailed reference and explanation for each setting is also provided.

The settings menu allows customization of the transmitter's factory default parameters.

After initial power-up, the transmitter is fully functional as an airflow and temperature measurement device. Transmitters are "plug and play" and do not require additional setup unless modifications to the factory default settings are desired by the user.

The most common setup parameters modified pertain to analog output, network and alarm settings.

Default and optional settings are shown in this document I-P first, followed by SI in brackets []. The parameter value "as displayed" on the LCD is shown in all capitals followed by a brief descriptive label or units in parenthesis ().

Record any changes to the factory default settings for future reference. All Advantage IV Gold Series transmitters are provided with a Bluetooth® Low Energy interface that allows transmitter settings to be quickly downloaded then e-mailed and/or saved using your iOS or Android phone or tablet.

3.1. SETTINGS MENU ACCESS AND NAVIGATION

The SETTINGS menu contains the following submenu categories:

- GLOBAL
- GENERAL
- DISPLAY
- ANALOG OUTPUT
- RS-485
- ETHERNET
- RF-LINK
- USB
- EB-LINK
- ALARM
- FAN ALARM (GTx108-F/An only)
- RELAY (EF-x2000 transmitters only)
- ADJUSTMENTS

The following symbols are used to describe shortcut paths for menu and submenu navigation:

- > press the enter ENT pushbutton once
- < press the escape ESC pushbutton once
- ↓ press the down arrow pushbutton until the subsequent menu item or parameter appears
- ↑ press the up arrow pushbutton until the subsequent menu item or parameter appears

Simultaneously press the ↑ and ↓ pushbuttons during normal operation to enter the main menu. The transmitter continues to operate normally in the background.

EBTRON, Inc • 1663 Hwy 701 S., Loris, SC 29569 • Toll Free: 800-2EBTRON (232-8766) • Fax: 843-756-1838 • EBTRON.com

The SETTINGS menu is displayed. Press the ENT pushbutton to select the top of the SETTINGS submenu category.

Parameters can be modified unless the transmitter has been locked using the LOCK TOOL (See Section 4). Press the ENT pushbutton to modify a parameter. The parameter is displayed without the "*" prefix and the parameter value flashes. Use the ↑ or ↓ pushbutton to modify the value of the parameter and press the ENT pushbutton to accept the modified value. The modified value is displayed with the "*" prefix. Press the ESC pushbutton instead of the ENT pushbutton to discard changes. After changes are complete, press the ESC pushbutton until the device returns to normal operation.

The SETTINGS menu block diagram is shown below.

FIGURE 3-1 SETTINGS MENU BLOCK DIAGRAM

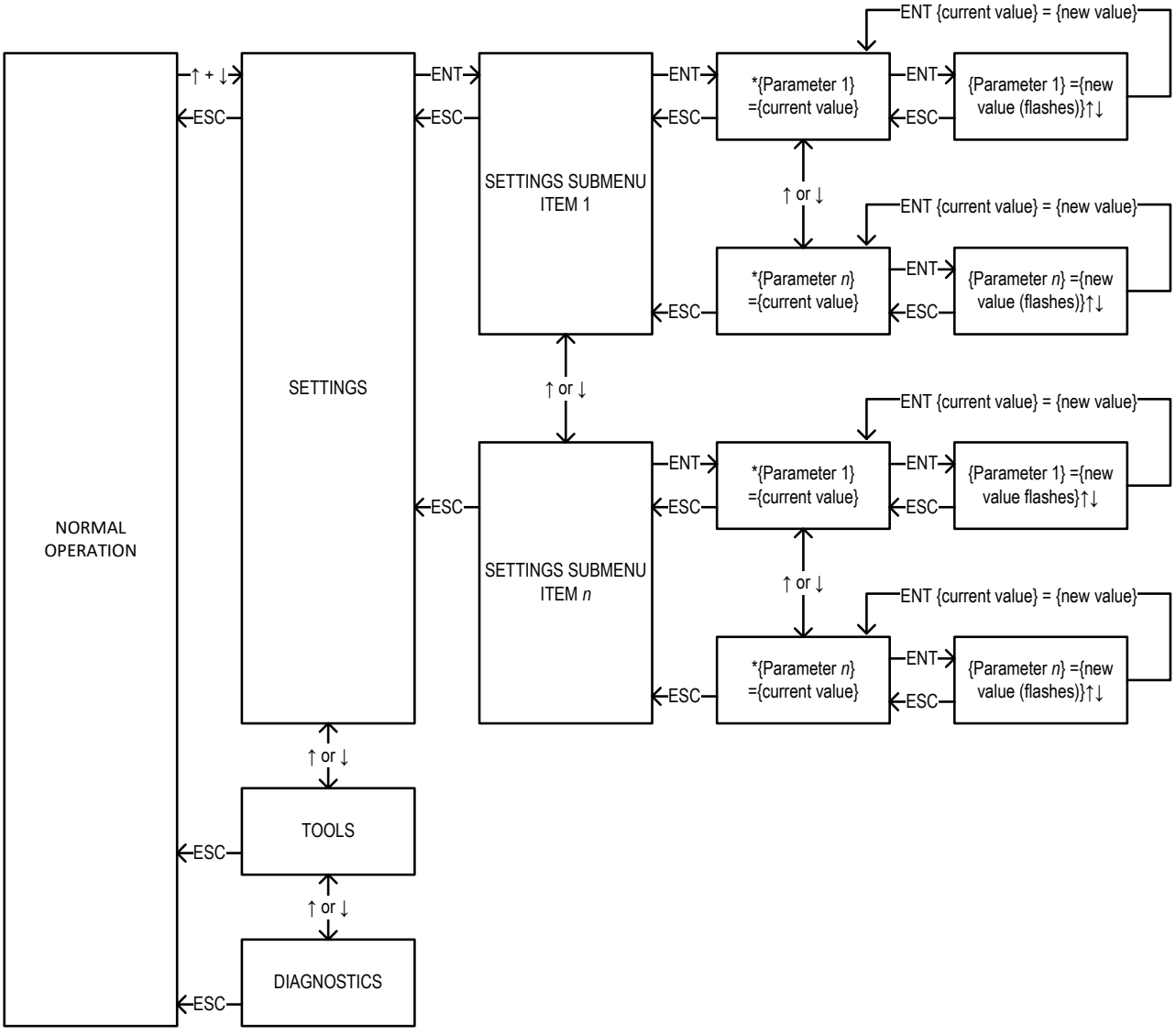

EBTRON, Inc • 1663 Hwy 701 S., Loris, SC 29569 • Toll Free: 800-2EBTRON (232-8766) • Fax: 843-756-1838 • EBTRON.com

TABLE 3-1 Factory Defaults, Optional Settings and Ranges

ⓘ All transmitters are single location transmitters unless otherwise noted. Analog output, network, RF and Bluetooth capability are model specific (see manual).

	Parameter	Product Line	Probe Type	Special Criteria	Default	Optional Settings/Ranges	Units
GLOBAL	SYS	All	All		I-P	SI	
	LOCATIONS[1]	EB-Flow2	-U		1	2	
	Note 1: Changing the number of locations automatically restores the transmitter to factory default settings.						
GENERAL	NAME	All	All		*{Trans. S.N.}*	Alpha numeric name up to 16 characters at time of order or in manually in field.	
	SERV	All	-P, -T, -U, -F		*AMD*	SA, RA, OA, EX, RE	
	SERV1			Dual Location 1 of 2	*AMD-1*	SA-1, RA-1, OA-1, EX-1, RE-1	
	SERV2			Dual Location 2 of 2	*AMD-2*	SA-2, RA-2, OA-2, EX-2, RE-2	
	AIRFLOW	All	All		ACT	STD	
	ALT	All	All		0	AUTO[2], 0 to 20000 [0 to 6000]	ft [m]
	Note 2: Auto is only available on GTx116e and GTx108e transmitters.						
	INTG	All	All		30	1 to 999 (1 to 300 for -F/An probe types)	x 300 ms
	INTG1			Dual Location 1 of 2		1 to 999 (1 to 750 for HTx202)	
	INTG2			Dual Location 2 of 2			
	LLIMIT	All	-P, -T, -U, -F		0 FPM	0 to 500 FPM [0.0 to 2.5 m/s]	
			-B	DPCONVERT=NO			
				DPCONVERT=YES	N/A		
	LLIMIT1		-P, -T, -U, -F	Dual Location 1 of 2	0 FPM	0 to 500 FPM [0.0 to 2.5 m/s]	
	LLIMIT2			Dual Location 2 of 2			
	AREA	All	-P, -T		*{Order Area}*	0.00 to 9999.99 [0.000 to 999.999]	sq ft [sq m]
			-U, -F, -B		*{Null}*		
	AREA1		-P, -T	Dual Location 1 of 2	*{Order Area}*		
			-U, -F	Dual Location 1 of 2	*{Null}*		
	AREA2		-P, -T	Dual Location 2 of 2	*{Order Area}*		
			-U, -F	Dual Location 2 of 2	*{Null}*		
	F_AREA*n*	Advantage IV	-F/An	AREA WIZ Saved	*{Null}*	0.00 to 9999.99 [0.000 to 999.999]	sq ft [sq m]
	DPCONVERT	All	-P, -T, -U, -F		N/A		
			-B		NO	YES	
	DIRECTION	All	-P, -T, -U, -F		N/A		
			-B		BI	UNI	
	TEMPMETH (not displayed)	All	All		WGT	None	
	H CONFIG	Advantage IV	-P w/ RH		RH	ENTH, DPT	
	Pb CORR		-P w/ RH		ON	OFF	

TABLE 3-1 Factory Defaults, Optional Settings and Ranges

	Parameter	Product Line	Probe Type	Special Criteria	Default	Optional Settings/Ranges	Units
GENERAL	EXT CAB	All	All		0	0 to 40 [0.0 to 12.2]	ft [m]
	EXT CAB1		-P, -T, -U, -F	Dual Location 1 of 2			
	EXT CAB2			Dual Location 2 of 2			
DISPLAY	LCD DISPL	All	All		ON	OFF[3]	
	Note 3: When LCD DISPL is OFF the LCD will only show "EBTRON" and the transmitter model code.						
	LCD NAME	All	All		OFF	ON	
	LCD SERV	All	-P, -T, -U, -F		OFF	ON	
				LOCATIONS=2	ON	N/A	
	LCD TRBL	All	All		ON	OFF	
	LCD UM	All	-P, -T		CFM [L/s][4]	FPM [m/s]	
			-U, -F		FPM [m/s]	CFM [L/s][4]	
			-B	DPCONVERT=NO	FPM [m/s]	CFM [L/s]	
				DPCONVERT=YES	iWG [Pa]	None	
	Note 4: The default and only option for LCD UM is FPM [m/s] when the AREA parameter is set to 0 or {null}.						
	LCD INTG	All	All		100	1 to 999 (1 to 750 for HTx202, 1 to 300 for -F/An probe types)	x 300 ms
ANALOG OUTPUT	AOUT[5]	Advantage IV	All		4-20mA	0-5V, 0-10V	
		EB-Flow2			2-10V	0-5V, 0-10V, 1-5V	
	Note 5: Does not apply to GTx116 and GTx108 transmitters without the "e" transmitter model suffix. Set jumpers OUT1 and OUT2 on the main PCB to the "mA" position for 4-20 mA output or "VDC" for 0-5/0-10V output on HTA104 and HTA202 transmitters.						
	AOUT1[6]	Advantage IV	All	SW1 set to mA	4-20mA	N/A	
				SW1 set to V	0-10V	0-5V	
	AOUT2[6]			SW2 set to mA	4-20mA	N/A	
				SW2 set to V	0-10V	0-5V	
	Note 6: Only applies to GTx116 and GTx108 transmitters without the "e" transmitter model suffix. Switches are located on the output card.						
	ON FAIL[7]	All	All		HI	LO	
	Note 7: ON FAIL applies to all analog outputs.						
	AO1 ASGN	All	-P, -T, -U		AF	None	
				Dual Location 1 of 2	AF1	F1-2, F2-1	
			-B		AF	None	
			-F	/SI, /DI	AF	None	
				Dual Location 1 of 2 (SI, /DI only)	AF1	F1-2, F2-1	
				/An	AF	None	
	AO1 UM	All	-P, -T, -U, -F		FPM [m/s]	CFM [L/s][8]	
			-B	DPCONVERT=NO			
				DPCONVERT=YES	iWG [Pa]	None	
	Note 8: The default and only option for AO1 UM is FPM [m/s] when the AREA parameter is set to 0 or {null}.						

TABLE 3-1 Factory Defaults, Optional Settings and Ranges

	Parameter	Product Line	Probe Type	Special Criteria	Default	Optional Settings/Ranges	Units
ANALOG OUTPUT	AO1 MS	All	-P, -T, -U, -F		0	None	
			-B	DIRECTION=UNI			
				DIRECTION=BI	*{-AO1 FS}*		
			-P, -T, -U, -F	AO1 ASGN=F1-2 or F2-1	*{-AO1 FS}*		
	AO1 FS	All	-T, -U, -B	AO1 UM=FPM [m/s]	3000 [15.0]	100 to 15000 [0.5 to 75.0]	FPM [m/s]
			-P		5000 [25.0]		
			-F		10000 [50.0]		
			-T, -U, -B	AO1 UM=CFM [L/s]	3000 [15000] x Area	5 to 999999 [5 to 999999]	CFM [L/s]
			-P		5000 [25000] x Area		
			-F		10000 [50000] x Area	5 to 999999 [5 to 999999]	
			-B	AO1 UM=iWG[Pa]	1.50 [300]	0.05 to 5.00 [10 to 1250]	iWG [Pa]
	AO2 ASGN	All	-P, -T, -U		TEMP	ALRM or TRBL	
				Dual Location 2 of 2	AF2	F1-2, F2-1	
			-B		TEMP	ALRM or TRBL	
			-F	/SI, /DI	TEMP	ALRM or TRBL	
				Dual Location 2 of 2 (/SI, /DI only)	AF2	F1-2, F2-1	
				/An	TEMP	ALRM, FA or TRBL	
	AO2 UM	All	-P, -T, -U, -F	Dual Location 2 of 2	FPM [m/s]	CFM [L/s][9]	
			All	AO2 ASGN=TEMP	F [C]	None	
	Note 9: The default and only option for AO2 UM is FPM [m/s] when the AREA parameter is set to 0 or {null}.						
	AO2 MS	All	-P, -T, -U, -F	AO2 ASGN=AF2	0	None	
				AO2 ASGN=F1-2 or F2-1	*{-AO2 FS}*		
			All	AO2 ASGN=TEMP	-20 [-30]	-50 to 160 [-50 to 70]	°F [°C]
	AO2 FS	All	-T, -U	Dual Location 2 of 2 and AO2 UM=FPM [m/s]	3000 [15.0]	100 to 15000 [0.5 to 75.0]	FPM [m/s]
			-P		5000 [25.0]		
			-F		10000 [50.0]		
			-T, -U	Dual Location 2 of 2 and AO2 UM=CFM [L/s]	3000 [15000] x Area	5 to 999999 [5 to 999999]	CFM [L/s]
			-P		5000 [25000] x Area		
			-F		10000 [50000] x Area		
			All	AO2 ASGN=TEMP	160 [70]	-50 to 160 [-50 to 70]	°F [°C]
	NO FAULT	All	All	AO2 ASGN=ALRM, FA or TRBL	HI	LO	
	AO3 ASGN	Advantage IV[10]	-P w/ RH	H CONFIG=RH	RH	None	
				H CONFIG=ENTH	ENTH		
				H CONFIG=DPT	DPT		

TABLE 3-1 Factory Defaults, Optional Settings and Ranges

	Parameter	Product Line	Probe Type	Special Criteria	Default	Optional Settings/Ranges	Units
ANALOG OUTPUT	AO3 UM	Advantage IV[10]	-P w/ RH	H CONFIG=RH	% RH	None	
				H CONFIG=ENTH	Btu/lb [kJ/kg]		
				H CONFIG=DPT	F DPT [C DPT]		
	AO3 MS	Advantage IV[10]	-P w/ RH	H CONFIG=RH	0	0 to 100	% RH
				H CONFIG=ENTH		-20 to 400 [-40 to 800]	Btu/lb [kJ/kg]
				H CONFIG=DPT		-50 to 160 [-50 to 70]	°F [°C]
	AO3 FS	Advantage IV[10]	-P w/ RH	H CONFIG=RH	100	0 to 100	% RH
				H CONFIG=ENTH	200 [400]	-20 to 400 [-40 to 800]	Btu/lb [kJ/kg]
				H CONFIG=DPT	100 [50]	-50 to 160 [-50 to 70]	°F [°C]
	Note 10: AO3 is only applicable to GTx116e transmitters that have the humidity sensor option, /H, provided with the -P probe type.						
RS-485	NETOUT	All	All		BACNET	MODBUS	
	NETADDR	All	All	NETOUT=BACNET	2	0 to 127	
				NETOUT=MODBUS		0 to 247	
	NETBAUD	All	All	NETOUT=BACNET	76800	38400, 19200, 9600	bps
				NETOUT=MODBUS	19200	76800, 38400, 9600	
	PARITY	All	All	NETOUT=MODBUS	EVEN	ODD, NONE1, NONE2	
	NETDI	All	All	NETOUT=BACNET	2	0 to 4194302	
	RS485 COM	All	All		OFF	ON	
ETHERNET	DHCP	All	All		ON	OFF	
	IP	All	All		10.0.5.100	Set by network integrator	
	MASK	All	All		255.255.240.0	Set by network integrator	
	GATE	All	All		10.0.0.1	Set by network integrator	
	BACNET	All	All		IP	ETH	
	NETDI	All	All	BACNET=IP or ETH	The last octet of the MAC address[11]	0 to 4194302	
	UDPPORT	Advantage IV[12]	All	BACNET=IP	47808	0 to 65535	
	Note 11:Only for GTM116e/GTM108e output card firmware 4.17 and later; all earlier firmware default is 2. Note 12: UDPPORT is only applicable to GTM116e and GTM108e transmitters						
LON	NO SETTINGS REQUIRED FOR LON NETWORK CONFIGURATION						
RF-LINK	RFLINK COM	Advantage IV	All		OFF	ON	
USB	USB WRITE	Advantage IV	All		ON	OFF	
EB-LINK	EB-LK INTG	Advantage IV	-P, -T, -F		100	1 to 999 (1 to 300 for -F/An probe types)	x 300 ms
	EB-LK STAT	Advantage IV	-P, -T, -F		ON	OFF	

TABLE 3-1 Factory Defaults, Optional Settings and Ranges

	Parameter	Product Line	Probe Type	Special Criteria	Default	Optional Settings/Ranges	Units
ALARM	LO ALRM	All	All		OFF	ON	
	HI ALRM	All	All		OFF	ON	
	ALRM UM[13]	All	-P, -T, -U, -F		FPM [m/s]	CFM [L/s]	
			-B	DPCONVERT=NO			
				DPCONVERT=YES	iWG [Pa]	None	
	Note 13: The default and only option for ALRM UM is FPM [m/s] when the AREA parameter is set to 0 or {null}.						
	SETPNT	All	-P, -T, -U, -F	ALRM UM=FPM [m/s]	0	0 to 999999 [0.00 to 99.99]	FPM [m/s]
				ALRM UM=CFM [L/s]		0 to 999999 [0 to 999999]	CFM [L/s]
			-B	ALRM UM=FPM [m/s]		0 to 999999 [0.00 to 99.99] (± if DIRECTION=BI)	FPM [m/s]
				ALRM UM=CFM [L/s]		0 to 999999 [0 to 999999] (± if DIRECTION=BI)	CFM [L/s]
				ALRM UM=iWG [Pa]		0.00 to 5.00 [0 to 1250] (± if DIRECTION=BI)	iWG [Pa]
	TOL	All	All		15%	> of 5% or 20 FPM [0.10 m/s] TO 100%	
	DELAY	All	All		2min	0min to 15min	
	ZERO OFF	All	-P, -T, -U, -F		YES	NO	
			-B	DPCONVERT=NO			
				DPCONVERT=YES	N/A	N/A	
	RESET	All	All		AUTO	MANUAL	
FAN ALARM	FAN ALRM	Advantage IV	-F/An		OFF	MIN, DEV, %MAX	
	ON ALRM	Advantage IV	-F/An		KEEP	IGNR	
	ALRM UM	Advantage IV	-F/An	FA TYPE=MIN	FPM [m/s]	CFM [L/s]	
	SETPNT	Advantage IV	-F/An	FA TYPE=DEV or %MAX	25%	10% to 100%	
				FA TYPE=MIN ALRM UM=FPM [m/s]	0	0 to 999999 [0.00 to 99.99]	FPM [m/s]
				FA TYPE=MIN ALRM UM=CFM [L/s]		0 to 999999 [0 to 999999]	CFM [L/s]
	DELAY	Advantage IV	-F/An		2min	0min to 15min	
	ZERO OFF	Advantage IV	-F/An		YES	NO	
	RESET	Advantage IV	-F/An		AUTO	MANUAL	
RELAY	R1 ASGN	EB-Flow2	All		NONE	ALRM or TRBL	
	R1 STATUS	EB-Flow2	All		NO	NC	

TABLE 3-1 Factory Defaults, Optional Settings and Ranges

	Parameter	Product Line	Probe Type	Special Criteria	Default	Optional Settings/Ranges	Units
ADJUSTMENTS	FLOW ADJ	All	-P, -T, -U, -F		OFF	ON	
			-B	DPCONVERT=NO			
				DPCONVERT=YES	N/A	N/A	
	F_ADJ UM	All	-P, -T, -U, -F		CFM [L/s][14]	FPM [m/s]	
			-B	DPCONVERT=NO			
				DPCONVERT=YES	N/A	N/A	
	Note 14: The default and only option for F_ADJ UM is FPM [m/s] when the AREA parameter is set to 0 or *{null}* .						
	PRESS ADJ	All	-B	DPCONVERT=NO	N/A	N/A	
				DPCONVERT=YES	OFF	ON	
	FAW SMPLS	All	All		100	1 to 999	x 300 ms
	GAIN	All	-P, -T, -U, -F		1.000	0.100 to 9.999	
			-B	DPCONVERT=NO			
				DPCONVERT=YES			
	GAIN1		-P, -T, -U, -F	Dual Location 1 of 2			
	GAIN2			Dual Location 2 of 2			
	OFF	All	-P, -T, -U, -F	F_ADJ UM=FPM [m/s]	0	-99999 to 99999 [-99.99 to 99.99]	F_ADJ UM
				F_ADJ UM=CFM [L/s]		-99999 to 99999	
			-B	DPCONVERT=NO F_ADJ UM=FPM [m/s]		-99999 to 99999 [-99.99 to 99.99]	
				DPCONVERT=NO F_ADJ UM=CFM [L/s]		-99999 to 99999	
				DPCONVERT=YES	0.000	-5.000 to 5.000 [-1250 to 1250]	iWG[Pa]
	OFF1		-P, -T, -U, -F	Dual Location 1 of 2 F_ADJ UM=FPM [m/s]	0	-99999 to 99999 [-99.99 to 99.99]	F_ADJ UM
				Dual Location 1 of 2 F_ADJ UM=CFM [L/s]		-99999 to 99999	
	OFF2			Dual Location 2 of 2 F_ADJ UM=FPM [m/s]		-99999 to 99999 [-99.99 to 99.99]	
				Dual Location 2 of 2 F_ADJ UM=CFM [L/s]		-99999 to 99999	

FIGURE 3-2 SINGLE LINE DISPLAY MENU STRUCTURE

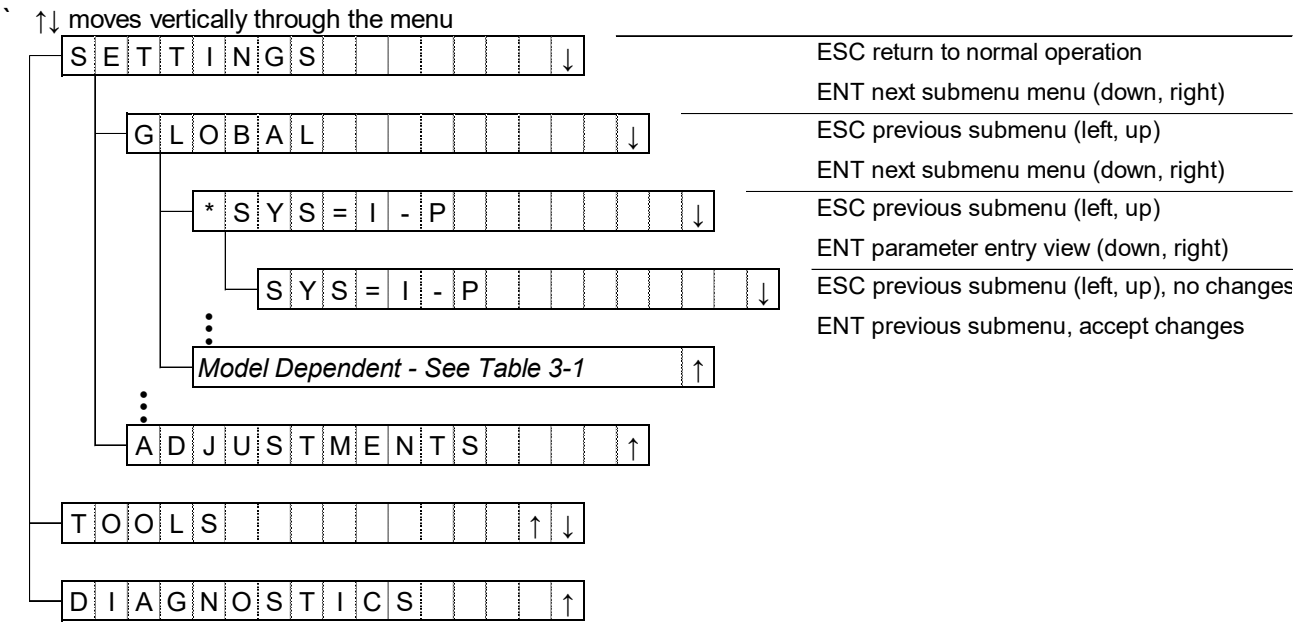

FIGURE 3-3 DUAL LINE DISPLAY MENU STRUCTURE

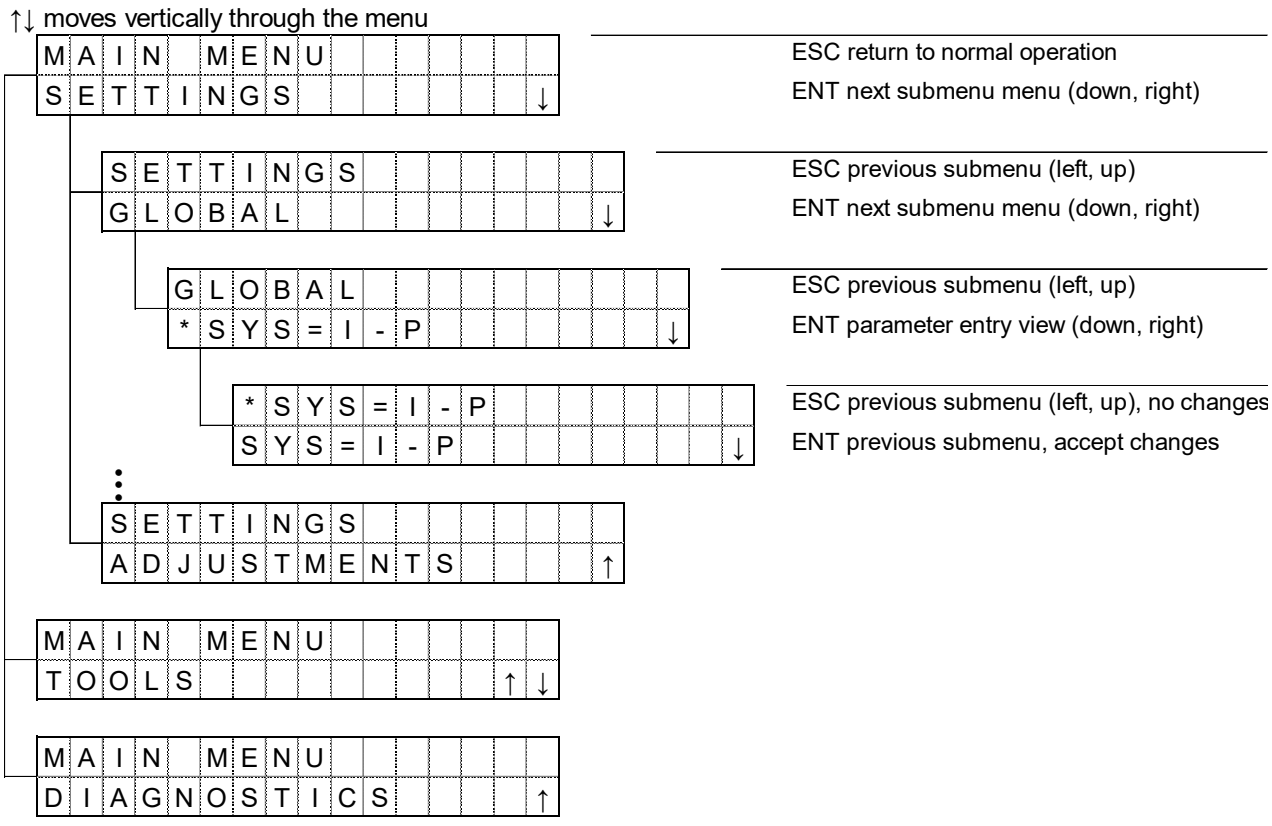

3.2. GLOBAL SETTINGS

The GLOBAL submenu contains the following parameters:

- SYS (System Units of Measure)
- LOCATIONS (Number of Measurement Locations)

3.2.1. System Units of Measure [SYS]

The units of measure used by the transmitter.

[Menu path: SETTINGS > GLOBAL > SYS]

Default: I-P (Imperial System of Units)
Optional Settings: SI (International System of Units)

U/M=I-P: The transmitter system of units and abbreviations used in this document are as follows:

- Area: square feet (sq. ft)
- Length: feet (ft)
- Velocity: feet per minute (FPM)
- Volumetric airflow: cubic feet per minute (CFM)
- Pressure: inches of water gauge (iWG)
- Temperature and Dewpoint: degrees Fahrenheit (°F)
- Relative Humidity: percent relative humidity (% RH)
- Enthalpy: British thermal units per pound (Btu/lb)

U/M=SI: The transmitter system of units and abbreviations used in this document are as follows:

- Area: square meters (sq. m)
- Length: meters (m)
- Velocity: meters per second (m/s)
- Volumetric airflow: liters per second (L/s)
- Pressure: Pascals (Pa)
- Temperature and Dewpoint: degrees Celsius/centigrade (°C)
- Relative Humidity: percent relative humidity (% RH)
- Enthalpy: Kilojoules per kilogram (kJ/kg)

Changing the system of units restores factory default settings. Modifications made by the user are lost.

Configure for 2 locations at initial power-up or prior to modifying any factory default settings.

3.2.2. Measurement Locations [LOCATIONS]

The number of measurement locations the transmitter serves.

The measurement location parameter is only visible with EB-Flow2 remote transmitters. Advantage IV dual location transmitters are model specific.

[Menu path: SETTINGS > GLOBAL >↓ LOCATIONS]

Default: 1
Optional Settings: 2

EBTRON, Inc • 1663 Hwy 701 S., Loris, SC 29569 • Toll Free: 800-2EBTRON (232-8766) • Fax: 843-756-1838 • EBTRON.com

Changing the transmitter from 1 to 2 locations, or vice versa, restores factory default settings. Modifications made by the user are lost.

Dual location applications require that the probes are installed in the proper locations and properly connected to the transmitter. See Section 1 for more information.

3.3. GENERAL SETTINGS

The GENERAL submenu contains the following parameters:

- NAME (Location Name)
- SERV (Service Description)
- AIRFLOW (Airflow Calculation Method)
- ALT (Altitude)
- INTG (Airflow Output Integration)
- LLIMIT (Low Limit Airflow Cutoff)
- AREA (Area at the Measurement Location)
- DPCONVERT (Differential Pressure Conversion) -B probe type only
- DIRECTION (Uni or Bidirectional Measurement) -B probe type only
- TEMPMETH (Temperature Averaging Method)
- H CONFIG (Relative Humidity Sensor Configuration) -P/H probe type only
- Pb CORR (Barometric Pressure Correction) -P/H probe type only
- EXT CAB (Extension Cable Length)

3.3.1. Location Name [NAME]

The alpha-numeric name of the location being served.

[Menu path: SETTINGS >↓ GENERAL > NAME]

Default: Transmitter serial number unless a valid location name is provided at the time of order.
Optional Settings: User defined in field using pushbutton interface (up to 16 characters can be entered).

*Enter edit mode by pressing enter when *NAME={parameter name}↑↓ is shown. Use the ↑ and ↓ pushbuttons to select the alpha-numeric character for each character position in the NAME string. Press the ENT pushbutton to move to the next character position to the right. Press the ESC pushbutton to move to the previous character position to the left. Press and hold the ENT pushbutton for 2 seconds to save the name. Press and hold the ESC pushbutton for 2 seconds to exit without accepting changes. The first 8 digits of the name are displayed on the LCD as *NAME={parameter name}↑↓.*

*Press the ENT pushbutton from the *NAME={parameter name}↑↓ and scroll through the name parameter using the ENT pushbutton to view names longer than 8 characters. Press and hold the ESC pushbutton to exit edit mode without making changes to the NAME parameter.*

Use the service description to differentiate the location name of transmitters configured for dual locations.

EBTRON, Inc • 1663 Hwy 701 S., Loris, SC 29569 • Toll Free: 800-2EBTRON (232-8766) • Fax: 843-756-1838 • EBTRON.com

3.3.2. Service Description [SERV]

The service description of the measurement location.

[Menu path: SETTINGS >↓ GENERAL >↓ SERV]

Default: AMD
Optional Settings: SA, RA, OA, EX, RE

If the transmitter is configured for two locations, parameters for SERV1 and SERV2 will be displayed in lieu of SERV and the suffix -1 and -2 will be added to the default and optional service descriptions, respectively for each location.

More detailed location naming (up to 16 characters) can be accomplished via BACnet.

The service description can be shown on the LCD to facilitate identification. The service description is particularly useful for display identification on dual location transmitters.

3.3.3. Airflow Calculation Method [AIRFLOW]

The calculation method used by the transmitter to determine the airflow rate.

[Menu path: SETTINGS >↓ GENERAL >↓ AIRFLOW]

Default: ACT (actual airflow)
Optional Settings: STD (standardized mass airflow)

AIRFLOW=ACT. The actual airflow is based on the nominal air density at standardized sea level and the actual air temperature. Modify the altitude parameter, ALT, to adjust the actual air velocity for the nominal altitude (or actual barometric pressure on GTx108e and GTx116e transmitters), if different from standardized sea level.

AIRFLOW=STD. The standardized mass airflow is normalized for 70 °F [21.1 °C] and 29.92” Hg [101.3 kPa].

If AIRFLOW=STD, the letter S will precede the airflow units, FPM [m/s] or CFM [L/s], on the LCD. The letter S is assumed when AIRFLOW is set to STD and intentionally not shown in additional references in this document to simplify reading.

3.3.4. Altitude [ALT]

The altitude used to correct the measured airflow for the nominal air density at the elevation above sea level where the AMD is installed.

[Menu path: SETTINGS >↓ GENERAL >↓ ALT]

Default: 0 (ft) [0 (m)]
Optional Settings: AUTO (GTx108e and GTx116e transmitters only) or 0 to 20000 (ft) [0 to 6000 (m)]

AUTO corrects for the actual barometric pressure rather than the nominal standardized elevation.

The altitude correction only affects the airflow when AIRFLOW=ACT.

EBTRON, Inc • 1663 Hwy 701 S., Loris, SC 29569 • Toll Free: 800-2EBTRON (232-8766) • Fax: 843-756-1838 • EBTRON.com

TABLE 3-2 CORRECTION FACTORS AT VARIOUS ALTITUDES Actual Airflow = Measured Airflow x Correction Factor			
ALT Parameter, ft [m]	Correction Factor	ALT, Parameter, ft [m]	Correction Factor
0	1.00	6,000 [1,828]	1.25
1,000 [304.8]	1.04	7,000 [2,134]	1.30
2,000 [609.6]	1.08	8,000 [2,438]	1.35
3,000 [914.4]	1.11	9,000 [2,743]	1.40
4,000 [1,219]	1.16	10,000 [3,048]	1.45
5.000 [1,524]	1.20	15,000 [4,572]	1.75
Note: Correction factors are based on 70 °F [21.1 °C] and 29.92” Hg [101.3 kPa] at sea level.			

3.3.5. Airflow Output Integration [INTG]

The integration buffer size for the running average of the airflow used for analog and network airflow output.

[Menu path: SETTINGS >↓ GENERAL >↓ INTG]

Default: 30
Optional Settings: 1 to 999 (1 to 300 for -F/An probe types and 1 to 750 for HTx202 transmitters)

Transmitters calculate the airflow every 300 milliseconds. The integration buffer is used to smooth real-time airflow data output to AO1 and the network airflow variable AI1. The default integration of 30 is the running average (first in, first out) of the average of all sensor nodes over the preceding 9 second time period.

ⓘ *If the transmitter is configured for two locations, parameters for INTG1 and INTG2 will be displayed in lieu of INTG.*

ⓘ *Airflow output integration is independent of the integration buffer which is used for airflow data displayed on the LCD (which is generally higher). Display integration is discussed in the DISPLAY SETTINGS section.*

Decreasing the integration may improve performance on fast acting control systems such as those found in laboratories and clean rooms.

⚠ *Increasing the integration buffer when installations are mounted in outdoor air intakes may result in control system hunting. Use the default integration and decrease PID output speed if hunting is a problem. EBTRON recommends using the default integration for control and a separate, higher integration, such as that used on the LCD for viewing.*

3.3.6. Low Limit Airflow Cutoff [LLIMIT]

The velocity below which the airflow is forced to 0 FPM [m/s].

[Menu path: SETTINGS >↓ GENERAL >↓ LLIMIT]

Default: 0 FPM [0 m/s]
Optional Settings: 0 FPM to 500 FPM [0 m/s to 2.5 m/s]

ⓘ *If the transmitter is configured for two locations, parameters for LLIMIT1 and LLIMIT2 will be displayed in lieu of LLIMIT.*

EBTRON, Inc • 1663 Hwy 701 S., Loris, SC 29569 • Toll Free: 800-2EBTRON (232-8766) • Fax: 843-756-1838 • EBTRON.com

LLIMIT is applied to both directions (i.e. ±) when transmitters with -B probes are configured for bi-directional airflow (DIRECTION=BI). LLIMIT is not supported when transmitters are configured for pressure (DPCONVERT=YES).

Use on outdoor air intakes to eliminate false airflow readings that may occur from transient wind gusts when the intake damper is closed. The low limit airflow cutoff does not affect airflow accuracy or modify any field adjustment coefficients.

3.3.7. Area [AREA]

The area used to convert the average velocity to volumetric airflow when CFM [L/s] is selected for the display and/or airflow output. The area parameter represents the total area of the measurement location.

[Menu path: SETTINGS >↓ GENERAL >↓ AREA]

Default and Optional Settings: See specific probe type

Conversion of the velocity to volumetric airflow requires that the proper area of the measurement location is used.

Record the area stored in the transmitter if the default analog airflow output signal units of measure for velocity is maintained and the analog output signal for velocity is used by the B.A.S. The area is used to determine the full-scale reading used by the B.A.S.

3.3.7.1. -P AND -T PROBE TYPES

Default: Area based on order size
Optional Settings: 0.00 to 9999.99 (sq. ft) [0.000 to 999.999 (sq. m)]

The -P and -T probe types have the area stored in a serial memory chip located in the cable plug of each sensor probe. The area is automatically transferred to the non-volatile memory of the transmitter at initial power-up based on order size. The area is printed on each hang tag connected near the terminal plug of each sensor probe.

If the transmitter is configured for two locations, parameters for AREA1 and AREA2 will be displayed in lieu of AREA.

Verify that the size and area on the hang tag match the actual area where the probes are installed. If the actual area is different, modify the area parameter and record the new size and area.

3.3.7.2. -U PROBE TYPES

Default: *{Null}*
Optional Settings: 0.00 to 9999.99 (sq. ft) [0.000 to 999.999 (sq. m)]

The -U probe type area(s) can be entered manually or by using the AREA WIZARD.

If the transmitter is configured for two locations, parameters for AREA1 and AREA2 will be displayed in lieu of AREA.

Probe area(s) can be modified directly through SETTINGS or by using the AREA WIZARD.

EBTRON, Inc • 1663 Hwy 701 S., Loris, SC 29569 • Toll Free: 800-2EBTRON (232-8766) • Fax: 843-756-1838 • EBTRON.com

3.3.7.3. -F PROBE TYPES

Default: *{Null}*
Optional Settings: 0.00 to 9999.99 (sq. ft) [0.000 to 999.999 (sq. m)]

3.3.7.3.1. -F/SI and -F/DI probe types

The area can be entered manually or by using the FAN WIZARD.

ⓘ *DWDI fans indicate a single AREA parameter equal to the total area of both inlets.*

3.3.7.3.2. -F/An probe types

The area can be entered manually or by using the FAN WIZARD.

ⓘ *Transmitters provided can be configured for up to eight individual fans in a fan array. Transmitters indicate a single AREA parameter equal to the total area of all of the fans in the array. Parameters for F_AREA1, F_AREA2 … F_AREAn are visible after the ARRAY WIZARD is run. Individual fan areas are used to determine individual fan airflow rates and to enable fan alarming features. Once the ARRAY WIZARD has been run the AREA parameter is locked and can only be modified by changing individual fan areas (i.e. the AREA is calculated based on individual fan areas).*

3.3.7.4. -B PROBE TYPES

Default: *{Null}*
Optional Settings: 0.00 to 9999.99 (sq. ft) [0.000 to 999.999 (sq. m)]

The area where the bleed sensor is located is generally not a concern. However, there are applications where the bleed sensor is used to determine the airflow rate through an opening, such as a hallway or corridor. It can also be used to estimate the airflow across a louver. In all cases, a reference airflow is required. The area can be entered manually or by using the AREA WIZARD.

Use the area of the opening to "rough out" the CFM [L/s] and a reference airflow to adjust offset/gain values to "fine tune" the measurement.

3.3.8. Differential Pressure Conversion [DPCONVERT]

Differential pressure conversion applies to the -B probe type only. The air velocity is converted to the equivalent pressure based on a nominal flow coefficient for the bleed sensor housing without any pipe or tube connected, is calculated using the measured air velocity.

[Menu path: SETTINGS >↓ GENERAL >↓ DPCONVERT]

Default: NO
Optional Settings: YES

DPCONVERT=NO. The measured air velocity is not converted to an estimated differential pressure.

DPCONVERT=YES. An estimated differential pressure, based on a nominal flow coefficient for the bleed sensor housing.

⚠ *The bleed airflow sensor is not a pressure sensor. The converted pressure is simply an estimate and should not be used for critical pressure measurement without field adjustment to a known pressure reference.*

⚠ *The addition of pipe or tubing to the bleed sensor housing will increase pressure losses and add additional error to the pressure measurement.*

EBTRON, Inc • 1663 Hwy 701 S., Loris, SC 29569 • Toll Free: 800-2EBTRON (232-8766) • Fax: 843-756-1838 • EBTRON.com

3.3.9. Uni or Bidirectional Measurement [DIRECTION]

Uni or bidirectional measurement applies to the -B probe type only.

[Menu path: SETTINGS >↓ GENERAL >↓ DIRECTION]

Default: BI
Optional Settings: UNI

DIRECTION=BI. The sensor measures airflow or equivalent pressure in both directions. The positive direction is in the direction of the airflow arrow.

DIRECTION=UNI. The sensor measures airflow or equivalent pressure in the direction of the airflow arrow only.

3.3.10. Temperature Averaging Method [TEMPMETH]

The method used to determine the average temperature of multiple sensor nodes.

[Menu path: no menu item]

Default: WGT (velocity weighted average)
Optional Settings: None

TEMPMETH=WGT. The velocity weighted average of each sensor node is used.

In a moving airstream, the actual temperature of air with a velocity and temperature profile is not equal to the arithmetic average of the individual sensor node measurements. The true average temperature should be weighted by the velocity at each sensor node.

The velocity-weighted temperature is used to calculate velocity-weighted relative humidity and enthalpy, thus compensating for velocity and temperature profiles and improved relative humidity and enthalpy measurement.

An averaging temperature probe will not match the weighted temperature output if there is both a velocity and temperature profile. Use the non-weighted temperature readings provided in the diagnostics menu to compare temperature readings when verification is required.

3.3.11. Relative Humidity Sensor Configuration [H CONFIG]

The configuration of the relative humidity sensor.

The relative humidity sensor configuration parameter is only visible with Advantage IV GTx116e remote transmitters that have the humidity sensor option, /H, provided with the -P sensor probe type.

[Menu path: SETTINGS >↓ GENERAL >↓ H CONFIG]

Default: RH (relative humidity)
Optional Settings: ENTH (enthalpy), DPT (dew point)

H CONFIG=RH. The calculated velocity-weighted relative humidity based on the relative humidity sensor and velocity-weighted temperature.

H CONFIG=ENTH. The calculated velocity-weighted enthalpy based on the relative humidity sensor dewpoint calculation, velocity-weighted temperature and barometric pressure (see Pb CORR).

H CONFIG=DPT. The calculated dewpoint based on the relative humidity sensor and adjacent sensor node temperature.

EBTRON, Inc • 1663 Hwy 701 S., Loris, SC 29569 • Toll Free: 800-2EBTRON (232-8766) • Fax: 843-756-1838 • EBTRON.com

3.3.12. Barometric Pressure Correction [Pb CORR]

Apply the measured barometric pressure to the enthalpy calculation.

ⓘ *The barometric pressure correction parameter is only visible with Advantage IV GTx116e remote transmitters that have the humidity sensor option, /H, provided with the -P sensor probe type.*

[Menu path: SETTINGS >↓ GENERAL >↓ Pb CORR]

Default: ON (Barometric pressure is measured using the onboard barometric pressure sensor)
Optional Settings: OFF (Barometric pressure is calculated based on the value of the altitude parameter, ALT)

3.3.13. Extension Cable Length [EXT CAB]

The length of a single extension cable if extension cables are added in the field.

[Menu path: SETTINGS >↓ GENERAL >↓ EXT CAB]

Default: 0 (ft) [0 (m)]
Optional Settings: 0 to 40 (ft) [0.0 to 12.2 (m)]

Extension cables can be added in the field if the cable length ordered does not reach the location where the transmitter is located. The additional cable length must be entered in the transmitter to compensate for the voltage drop to the heated sensor and ensure sensor accuracy.

⚠ *Extension cables of equal length must be added to each sensor probe.*

⚠ *The total cable length of the original cable and the extension cable must not exceed 50 ft [15.2 m]*

ⓘ *If the transmitter is configured for two locations, parameters for EXT CAB1 and EXT CAB2 will be displayed in lieu of EXT CAB.*

3.4. DISPLAY SETTINGS

An alpha-numeric LCD is provided with all models covered in this manual. The DISPLAY submenu contains the following parameters:

- LCD DSPL (LCD Display Mode)
- LCD NAME (LCD Location Name Indication)
- LCD SERV (LCD Service Indication)
- LCD TRBL (LCD System Trouble Indication)
- LCD UM (LCD Airflow Units of Measure)
- LCD INTG (LCD Airflow Integration)

3.4.1. Display Operation

The following Advantage IV and EB-Flow2 transmitters are provided with a single line non-backlit, 16-character LCD:

- Advantage IV Product Line
    - Gold Series
        - GTx116
        - GTx208
        - GTx108
        - GTx204

EBTRON, Inc • 1663 Hwy 701 S., Loris, SC 29569 • Toll Free: 800-2EBTRON (232-8766) • Fax: 843-756-1838 • EBTRON.com

    - Hybrid Series
        - HTx104
        - HTx202
- *EB-Flow2* Product Line
    - EF Series
        - EF-x2000

The following Advantage IV transmitters are provided with a dual line backlit, 16-character by 2-row LCD:

- Advantage IV Product Line
    - Gold Series
        - GTx116e
        - GTx208e
        - GTx108e
        - GTx204e

Transmitters can be configured to show or hide specific views based on parameters described in the following sections. Additional views are dependent on alarm settings and trouble code status.

3.4.1.1. SINGLE LINE DISPLAY OPERATION

3.4.1.1.1. Single Location Transmitters

View is active when LCD NAME = ON (Default = OFF)

<	N	A	M	E	>										

View is active when LCD SERV = ON (Default = OFF)

<	S	E	R	V	>										

View is always active

#	#	#	#	#		C	F	M		#	#	.	#		F	Auto space.

View is active when LOW Airflow Alarm = Active

A	L	A	R	M	:	L	O	W		F	L	O	W		

View is active when HIGH Airflow Alarm = Active

A	L	A	R	M	:	H	I	G	H		F	L	O	W	

View is active when Fan Alarm = Active

A	L	A	R	M	:	F	A	N		#						First fan to go into alarm.

View is active when TRBL = Active and LCD TRBL = ON

#	#		[	E	R	R	O	R		D	E	S	C	R	]	## = Trouble Code. Toggle through additional errors.

EBTRON, Inc • 1663 Hwy 701 S., Loris, SC 29569 • Toll Free: 800-2EBTRON (232-8766) • Fax: 843-756-1838 • EBTRON.com

3.4.1.1.2. Dual Location Transmitters

View is active when LCD NAME = ON (Default = OFF)

<	N	A	M	E	>									

View is always active

<	S	E	R	V	1	>								

View is always active

#	#	#	#	#		C	F	M		#	#	.	#		F

Auto space.

View is active when LOW Airflow Alarm = Active

A	L	A	R	M	:	L	O	W		F	L	O	W		

View is active when HIGH Airflow Alarm = Active

A	L	A	R	M	:	H	I	G	H		F	L	O	W

Note: There is no fan alarm available on dual location units.

View is always active

<	S	E	R	V	2	>								

View is always active

#	#	#	#	#		C	F	M		#	#	.	#		F

Auto space.

Note: There is no airflow alarm for location 2.

Note: There is no fan alarm available on dual location units.

View is active when TRBL = Active and LCD TRBL = ON

#	#		[	E	R	R	O	R		D	E	S	C	R	]

= Trouble Code.

Toggle through additional errors.

3.4.1.2. DUAL LINE DISPLAY OPERATION

3.4.1.2.1. Single Location Transmitters without the /H Humidity Option

View is active when LCD NAME = ON (Default = OFF)

<	N	A	M	E	>									

View is always active

<	S	E	R	V	>										Not visible when LCD SERV = OFF.
#	#	#	#	#		C	F	M		#	#	.	#		F	Auto space.

View is active when LOW or HIGH Airflow Alarm = Active

A	L	A	R	M	:	L	O	W		F	L	O	W			Not visible when low flow alarm is inactive.
A	L	A	R	M	:	H	I	G	H		F	L	O	W		Not visible when high flow alarm is inactive.

View is active when Fan Alarm = Active

A	L	A	R	M	:	F	A	N		#						First fan to go into alarm.

View is active when TRBL = Active and LCD TRBL = ON

#	#		[	E	R	R	O	R		D	E	S	C	R	]	## = First Trouble Code.
#	#		[	E	R	R	O	R		D	E	S	C	R	]	## = Second Trouble Code, if applicable.

Toggle through additional errors.

EBTRON, Inc • 1663 Hwy 701 S., Loris, SC 29569 • Toll Free: 800-2EBTRON (232-8766) • Fax: 843-756-1838 • EBTRON.com

3.4.1.2.2. Single Location Transmitters with the /H Humidity Option

View is active when LCD NAME or LCD SERV = ON

<NAME>	Not visible when LCD NAME = OFF
<SERV>	Not visible when LCD SERV = OFF

View is always active when RHCONFIG=RH

##### CFM ##.# F	Auto space.
### %RH	HCONFIG = RH

View is always active when RHCONFIG=DPT

##### CFM ##.# F	Auto space.
### F DPT ### %RH	HCONFIG = DPT

View is always active when RHCONFIG=ENTH

##### CFM ##.# F	Auto space.
### Btu/lb ### %RH	HCONFIG = ENTH

Alarm View: View is active when LOW or HIGH Airflow Alarm = Active

ALARM: LOW FLOW	Not visible when low flow alarm is inactive.
ALARM: HIGH FLOW	Not visible when high flow alarm is inactive.

View is active when TRBL = Active and LCD TRBL = ON

## [ERROR DESCR]	## = First Trouble Code.
## [ERROR DESCR]	## = Second Trouble Code, if applicable.
	Toggle through additional errors.

3.4.1.2.3 Dual Location Transmitters without the /H Humidity Option

View is active when LCD NAME = ON (Default = OFF)

<NAME>

View is always active

<SERV1>	Not visible when LCD SERV = OFF.
##### CFM ##.# F	Auto space.

View is active when LOW or HIGH Airflow Alarm = Active

ALARM: LOW FLOW	Not visible when low flow alarm is inactive.
ALARM: HIGH FLOW	Not visible when high flow alarm is inactive.

Note: There is no fan alarm available on dual location units

View is always active

<SERV2>	Not visible when LCD SERV = OFF.
##### CFM ##.# F	Auto space.

Note: There is no airflow alarm for location 2

Note: There is no fan alarm available on dual location units

View is active when TRBL = Active and LCD TRBL = ON

## [ERROR DESCR]	## = First Trouble Code.
## [ERROR DESCR]	## = Second Trouble Code, if applicable.
	Toggle through additional errors.

EBTRON, Inc • 1663 Hwy 701 S., Loris, SC 29569 • Toll Free: 800-2EBTRON (232-8766) • Fax: 843-756-1838 • EBTRON.com

3.4.1.2.4. Dual Location Transmitters with the /H Humidity Option

This configuration is not available.

3.4.2. LCD Display Mode [LCD DSPL]

Enables or disables LCD option during normal operation.

[Menu path: SETTINGS >↓ DISPLAY >↓ LCD DSPL]

Default: ON (normal display operation)
Optional Settings: OFF (displays EBTRON {transmitter model} only)

3.4.3. LCD Location Name Indication [LCD NAME]

Show or hide the location name, NAME, on the LCD.

[Menu path: SETTINGS >↓ DISPLAY >↓ LCD NAME]

Default: OFF (do not display the location name)
Optional Settings: ON (display the location name)

3.4.4. LCD Service Description Indication [LCD SERV]

Show or hide the service description, SERV, on the LCD.

[Menu path: SETTINGS >↓ DISPLAY >↓ LCD SERV]

3.4.4.1. SINGLE LOCATION ALL PROBE TYPES

Default: OFF (do not display the service location)
Optional Settings: ON (display the service location)

3.4.4.2. DUAL LOCATION ALL PROBE TYPES

Default: ON (display the service location)
Optional Settings: None.

3.4.5. LCD System Trouble Indication [LCD TRBL]

Show or hide active trouble codes and faults on the LCD.

[Menu path: SETTINGS >↓ DISPLAY >↓ LCD TRBL]

Default: ON (display faults and trouble codes)
Optional Settings: OFF (do not display faults and trouble codes)

3.4.6. LCD Airflow Units of Measure [LCD UM]

The airflow units of measure displayed on the LCD.

[Menu path: SETTINGS >↓ DISPLAY >↓ LCD UM]

Default and Optional Settings: See appropriate probe type.

ⓘ *The area parameter(s) [AREA] of -F, -U and -B probe types must be entered (i.e. not equal to the factory default value of {null}) for the LCD UM=CFM [L/s] option to be available. "ENTER AREA <OK>" will be displayed when CFM [L/s] is selected. Press ENT or ESC to return to the "*LCD UM=FPM [m/s]" menu prompt.*

EBTRON, Inc • 1663 Hwy 701 S., Loris, SC 29569 • Toll Free: 800-2EBTRON (232-8766) • Fax: 843-756-1838 • EBTRON.com

The LCD units of measure is independent of analog and/or network variable units of measure.

3.4.6.1. -P AND -T PROBE TYPES

Default: CFM [L/s]
Optional Settings: FPM [m/s]

3.4.6.2. -F AND -U PROBE TYPES

Default: FPM [m/s]
Optional Settings: CFM [L/s]

If the ARRAY WIZARD or AREA WIZARD has been run, the setting for LCD UM will be changed to CFM [L/s].

3.4.6.3. -B PROBE TYPE

3.4.6.3.1. DP CONVERT = NO

Default: FPM [m/s]
Optional Settings: CFM [L/s]

3.4.6.3.2. DP CONVERT = YES

Default: iWG (inwg) [Pa (pascals)]
Optional Settings: None

3.4.7. LCD Airflow Integration [LCD INTG]

The integration buffer size for the running average of the airflow used for output to the LCD.

[Menu path: SETTINGS >↓ DISPLAY >↓ LCD INTG]

Default: 100
Optional Settings: 1 to 999 (1 to 300 for -F/An probe types and 1 to 750 for HTx202 transmitters)

Transmitters calculate the airflow every 300 milliseconds. The integration buffer is used to smooth real-time airflow data for viewing on the LCD. The default integration of 100 is the running average (first in, first out) of the average of all sensor nodes over the preceding 30 second time period.

Increasing the integration buffer may stabilize the airflow reading indicated on the display in turbulent locations such as outdoor air intakes. The LCD integration buffer has no effect on the output signal or network airflow variable reading.

3.5. ANALOG OUTPUT SETTINGS

Analog output signals are provided with the following transmitter models:

- Advantage IV Product Line
  - Models with the third digit of the model code equal to A, C, M or W
- *EB-Flow2* Product Line
  - Models with the first digit after EF- equal to A

Failure to properly configure the output signal will result in significant measurement error at the B.A.S.

EBTRON, Inc • 1663 Hwy 701 S., Loris, SC 29569 • Toll Free: 800-2EBTRON (232-8766) • Fax: 843-756-1838 • EBTRON.com

The ANALOG OUTPUT submenu contains the following parameters:

- AOUT (Analog Output Signal Type and Range)
- ON FAIL (Analog Output on Total Sensor Failure)
- AO1 ASGN (AO1 Assignment)
- AO1 UM (AO1 Unit of Measure)
- AO1 MS (AO1 Minimum Scale)
- AO1 FS (AO1 Full Scale)
- AO2 ASGN (AO2 Assignment)

The following parameters are only available when AO2 ASGN is equal to TEMP, AF2, F1-2 or F2-1

- AO2 UM (AO2 Unit of Measure)
- AO2 MS (AO2 Minimum Scale)
- AO2 FS (AO2 Full Scale)

The following parameter is only available when AO2 ASGN is equal to ALRM, FA or TRBL

- NO FAULT (AO2 Output on Inactive Notification Alarm)

The following parameters are only available with Advantage IV GTx116e remote transmitters that have the humidity sensor option, /H, provided with the -P sensor probe type.

- AO3 ASGN (AO3 Assignment)
- AO3 UM (AO3 Unit of Measure)
- AO3 MS (AO3 Minimum Scale)
- AO3 FS (AO3 Full Scale)

3.5.1. Analog Output Signals [AOUT]

The analog output type and range for each of the analog outputs.

[Menu path: SETTINGS >↓ ANALOG OUT > AOUT]

3.5.1.1. ADVANTAGE IV MODELS

Default: 4-20mA (current)
Optional Settings: 0-5V, 0-10V (voltage)

⚠ *Current output is "4-wire" type. Do not connect to a loop powered input that provides an excitation voltage.*

ⓘ *The output signal type of Advantage IV GTx108 and GTx116 transmitters (x=C and M) is selected using switches SW1 and SW2 on the output card installed on the main circuit board for analog outputs 1 and 2, respectively. The switch position must be in the VDC position for the optional 0-5V or 0-10V signals to be available. Parameters for AOUT1 and AOUT2 will be displayed in lieu of AOUT.*

ⓘ *Output jumpers, OUT1 (AO1) and OUT2 (AO2) must be configured for the proper output configuration, mA or VDC on Hybrid HTA104/HTA202 transmitters.*

ⓘ *Output signals are isolated from the power supply.*

EBTRON, Inc • 1663 Hwy 701 S., Loris, SC 29569 • Toll Free: 800-2EBTRON (232-8766) • Fax: 843-756-1838 • EBTRON.com

3.5.1.2. *EB-FLOW2* MODELS

Default: 2-10V (voltage)
Optional Settings: 0-5V, 0-10V, 1-5V (voltage)

⚠ *Output signals are not isolated from the power supply. Provide an individual power transformer, secondary not grounded, if isolation is required.*

ⓘ *The 1-5 VDC and 2-10 VDC outputs can drive a 250 ohm and 500 ohm, respectively, 4-20 mA input circuit.*

3.5.2. Analog Output on Total System Failure [ON FAIL]

The analog output set if a total system failure is detected.

[Menu path: SETTINGS > ANALOG OUT >↓ ON FAIL]

Default: HI (set analog outputs to 100%)
Optional Settings: LO (set analog outputs to 0%)

ONFAIL=LO. The output of AO1 is set to 0%. The output of AO2, if assigned to temperature, is set to 0%. The output of AO3 on GTx116e transmitters is set to 0%.

ONFAIL=HI. The output of AO1 is set to 100%. The output of AO2, if assigned to temperature, is set to 100%. The output of AO3 on GTx116e transmitters is set to 100%.

3.5.3. AO1 Assignment [AO1 ASGN]

The object assigned to analog output AO1.

[Menu path: SETTINGS >↓ ANALOG OUT >↓ AO1 ASGN]

3.5.3.1. SINGLE LOCATION ALL PROBE TYPES

Default: AF (average airflow of all sensor nodes)
Optional Settings: None

3.5.3.2. DUAL LOCATION ALL PROBE TYPES

Default: AF1 (average airflow of all sensor nodes connected to Location 1)
Optional Settings: F1-2 (Location - Location 2), F2-1 (Location 2 - Location 1)

ⓘ *Dual location transmitters with two connections use the leftmost connector when viewed from the display side as "Location 1". Dual location transmitters with four connectors use the leftmost two connectors as "Location 1". Transmitters with 8 connectors use the top four connectors relative to the cover as "Location 1".*

Differential airflow is generally used in volumetric airflow units (i.e. ΔCFM [L/s]. Set the units of measure for AO1 UM and AO2 UM to CFM [L/s] to output the differential airflow as volumetric airflow.

EBTRON, Inc • 1663 Hwy 701 S., Loris, SC 29569 • Toll Free: 800-2EBTRON (232-8766) • Fax: 843-756-1838 • EBTRON.com

3.5.4. AO1 Unit of Measure [AO1 UM]

The unit of measure of AO1.

[Menu path: SETTINGS >↓ ANALOG OUT >↓ AO1 UM]

*The area parameter(s) [AREA] of -F, -U and -B probe types must be entered (i.e. not equal to the factory default value of {null}) for the LCD UM=CFM [L/s] option to be available. "ENTER AREA <OK>" will be displayed when CFM [L/s] is selected. Press ENT or ESC to return to the "*AO1 UM=FPM [L/s]" menu prompt.*

3.5.4.1. ALL PROBE TYPES EXCEPT -B

Default: FPM [m/s]
Optional Settings: CFM [L/s]

Use the default output unit of measure and scaling and avoid field modification. Multiply the default full-scale velocity reading by the area to determine the full-scale CFM [L/s] for the B.A.S.

3.5.4.2. -B PROBE TYPE

3.5.4.2.1. DP CONVERT = NO

Default: FPM [m/s]
Optional Settings: CFM [L/s]

3.5.4.2.2. DP CONVERT = YES

Default: iWG (inwg) [Pa (pascals)]
Optional Settings: None

3.5.5. AO1 Minimum Scale Reading [AO1 MS]

The airflow rate that results in an output signal of 0%.

[Menu path: SETTINGS >↓ ANALOG OUT >↓ AO1 MS]

3.5.5.1. ALL PROBE TYPES EXCEPT THE -B PROBE TYPE

3.5.5.1.1. AO1 ASGN is set to AF (AF1 on dual location transmitters)

Default: 0
Optional Settings: None

3.5.5.1.2. AO1 ASGN is set to F1-2 or F2-1 (Dual location transmitters only)

Default: -AO1 FS (negative value of AO1 FS)
Optional Settings: None

3.5.5.2. -B PROBE TYPE

3.5.5.2.1. DIRECTION = UNI

Default: 0
Optional Settings: None

3.5.5.2.2. DIRECTION = BI

Default: -AO1 FS (negative value of AO1 FS)
Optional Settings: None

EBTRON, Inc • 1663 Hwy 701 S., Loris, SC 29569 • Toll Free: 800-2EBTRON (232-8766) • Fax: 843-756-1838 • EBTRON.com

3.5.6. AO1 Full Scale Reading [AO1 FS]

The airflow rate that results in an output signal of 100%.

[Menu path: SETTINGS >↓ ANALOG OUT >↓ AO1 FS]

Default and Optional Settings: See appropriate probe type

ⓘ *The output signal is linear to airflow (or pressure on -B probe types configured for DPCONVERT=YES).*

3.5.6.1. -P PROBE TYPES

3.5.6.1.1. AO1 UM = FPM [m/s]

Default: 5000 (FPM) [25.0 (m/s)]
Optional Settings: 100 to 15000 (FPM) [0.5 to 75.0 (m/s)]

3.5.6.1.2. AO1 UM = CFM [L/s]

Default: {5000 x AREA} (CFM) [{25000 x AREA} (L/s)]
Optional Settings: 5 to 999999 (CFM) [5 to 999999 (L/s)]

3.5.6.2. -U AND -T PROBE TYPES

3.5.6.2.1. AO1 UM = FPM [m/s]

Default: 3000 (FPM) [15.0 (m/s)]
Optional Settings: 100 to 15000 (FPM) [0.5 to 75.0 (m/s)]

3.5.6.2.2. AO1 UM = CFM [L/s]

Default: {3000 x AREA} (CFM) [{15000 x AREA} (L/s)]
Optional Settings: 5 to 999999 (CFM) [5 to 999999 (L/s)]

3.5.6.3. -F PROBE TYPE

3.5.6.3.1. AO1 UM = FPM [m/s]

Default: 10000 (FPM) [50.0 (m/s)]
Optional Settings: 100 to 15000 (FPM) [0.5 to 75.0 (m/s)]

3.5.6.3.2. AO1 UM = CFM [L/s]

Default: {10000 x AREA} (CFM) [{50000 x AREA} (L/s)]
Optional Settings: 5 to 999999 (CFM) [5 to 999999 (L/s)]

3.5.6.4. -B PROBE TYPE

3.5.6.4.1. AO1 UM = FPM [m/s]

Default: 3000 (FPM) [15.0 (m/s)]
Optional Settings: 100 to 15000 (FPM) [0.5 to 75.0 (m/s)]

3.5.6.4.2. AO1 UM = CFM [L/s]

Default: {3000 x AREA} (CFM) [{15000 x AREA} (L/s)]
Optional Settings: 5 to 999999 (CFM) [5 to 999999 (L/s)]

EBTRON, Inc • 1663 Hwy 701 S., Loris, SC 29569 • Toll Free: 800-2EBTRON (232-8766) • Fax: 843-756-1838 • EBTRON.com

3.5.6.4.3. AO1 UM = inWG [Pa]

Default: 1.50 (iWG) [300 (Pa)]
Optional Settings: 0.05 to 5.00 (iWG) [10 to 1250 (Pa)]

3.5.6.5. ALL PROBE TYPES

Some B.A.S. application controllers use "span" rather than minimum- and full-scales. The span is equal to the full-scale – minimum scale and the offset is equal to the minimum scale.

EBTRON airflow measurement accuracy is percent of reading. Decreasing the full-scale does not improve measurement accuracy. Today's application controllers generally have sufficient accuracy and input resolution to use the default output scaling of the transmitters.

3.5.7. AO2 Assignment [AO2 ASGN]

The object assigned to analog output AO2.

[Menu path: SETTINGS >↓ ANALOG OUT >↓ AO2 ASGN]

3.5.7.1. SINGLE LOCATION -P, -T, -U AND ALL -B PROBE TYPES

Default: TEMP (temperature)
Optional Settings: ALRM (airflow alarm) or TRBL (system trouble alarm)

See "Alarm Settings" for more information on configuring built-in notification alarms.

3.5.7.2. SINGLE LOCATION -F PROBE TYPE

Default: TEMP (temperature)
Optional Settings: ALRM (airflow alarm), FA (fan alarm, FAN TYPE=ARRAY) or TRBL (system trouble alarm)

See "Alarm Settings" for more information on configuring built-in notification alarms.

FAN TYPE is selected using the ARRAY WIZARD. See "Fan Alarm Settings" for more information on configuring the fan alarm.

3.5.7.3. DUAL LOCATION -P, -T, -U AND -F PROBE TYPES

Default: AF2 (Location 2)
Optional Settings: F1-2 (Location 1 - Location 2), F2-1 (Location 2 - Location 1)

Dual location transmitters with two connections use the rightmost connector when viewed from the display side as "Location 2". Dual location transmitters with four connectors use the rightmost two connectors as "Location 2". Transmitters with 8 connectors use the bottom four connectors as "Location 2".

Differential airflow is generally used in volumetric airflow units (i.e. ∆CFM [L/s]). Set the units of measure for AO1 UM and AO2 UM to CFM [L/s] to output the differential airflow as volumetric airflow.

EBTRON, Inc • 1663 Hwy 701 S., Loris, SC 29569 • Toll Free: 800-2EBTRON (232-8766) • Fax: 843-756-1838 • EBTRON.com

Note: Sections 3.5.8. to 3.5.10. only apply when AO2 ASGN=TEMP.

3.5.8. AO2 Unit of Measure [AO2 UM]

The temperature unit of measure of AO2.

[Menu path: SETTINGS >↓ ANALOG OUT >↓ AO2 UM]

Default: F (°F) [C (°C)]
Optional Settings: None

3.5.9. AO2 Minimum Scale Reading [AO2 MS]

The temperature that results in an output signal of 0%.

[Menu path: SETTINGS >↓ ANALOG OUT >↓ AO2 MS]

Default: -20 (°F) [-30 (°C)]
Optional Settings: -50 to 160 (°F) [-50 to 70 (°C)]

ⓘ *AO2 MS cannot exceed AO2 FS.*

3.5.10. AO2 Full Scale Reading [AO2 FS]

The temperature that results in an output signal of 100%.

[Menu path: SETTINGS >↓ ANALOG OUT >↓ AO2 FS]

Default: 160 (°F) [70 (°C)]
Optional Settings: -50 to 160 (°F) [-50 to 70 (°C)]

ⓘ *AO2 FS cannot be less than AO2 MS.*

ⓘ *The output signal is linear to temperature.*

ⓘ *Some B.A.S. application controllers use "span" rather than minimum- and full-scales. The span is equal to the full-scale – minimum scale and the offset is equal to the minimum scale.*

ⓘ *EBTRON temperature measurement accuracy is a fixed value. Decreasing the full-scale does not improve measurement accuracy. Today's application controllers generally have sufficient accuracy and input resolution to use the default output scaling of the transmitters.*

Note: Sections 3.5.11. to 3.5.13. only apply when AO2 ASGN=AF2, F1-2 or F2-1

3.5.11. AO2 Unit of Measure [AO2 UM]

The airflow unit of measure of AO2.

[Menu path: SETTINGS >↓ ANALOG OUT >↓ AO2 UM]

Default: FPM [m/s]
Optional Settings: CFM [L/s]

ⓘ *The area parameter(s) [AREA] of -F and -U probe types must be entered (i.e. not equal to the factory default value of {null}) for the LCD UM=CFM [L/s] option to be available. "ENTER AREA <OK>" will be displayed when CFM [L/s] is selected. Press ENT or ESC to return to the "*AO2 UM=FPM [L/s]" menu prompt.*

EBTRON, Inc • 1663 Hwy 701 S., Loris, SC 29569 • Toll Free: 800-2EBTRON (232-8766) • Fax: 843-756-1838 • EBTRON.com

Use the default output unit of measure and scaling and avoid field modification. Multiply the default full-scale velocity reading by the area to determine the full-scale CFM [L/s] for the B.A.S.

3.5.12. AO2 Minimum Scale Reading [AO2 MS]

The airflow rate that results in an output signal of 0%.

[Menu path: SETTINGS >↓ ANALOG OUT >↓ AO2 MS]

3.5.12.1. ALL PROBE TYPES EXCEPT THE -B PROBE TYPE

The -B probe type is not supported by dual location transmitters.

3.5.12.1.1. AO2 ASGN is set to AF2

Default: 0
Optional Settings: None

3.5.12.1.2. AO2 ASGN is set to F1-2 or F2-1

Default: -AO2 FS (negative value of AO2 FS)
Optional Settings: None

3.5.13. AO2 Full Scale Reading [AO2 FS]

The airflow rate that results in an output signal of 100%.

[Menu path: SETTINGS >↓ ANALOG OUT >↓ AO2 FS]

The output signal is linear to airflow.

3.5.13.1. -P PROBE TYPES

3.5.13.1.1. AO2 UM = FPM [m/s]

Default: 5000 (FPM) [25.0 (m/s)]
Optional Settings: 100 to 15000 (FPM) [0.5 to 75.0 (m/s)]

3.5.13.1.2. AO2 UM = CFM [L/s]

Default: {5000 x AREA} (CFM) [{25000 x AREA} (L/s)]
Optional Settings: 5 to 999999 (CFM) [5 to 999999 (L/s)]

3.5.13.2. -U AND -T PROBE TYPES

3.5.13.2.1. AO2 UM = FPM [m/s]

Default: 3000 (FPM) [15.0 (m/s)]
Optional Settings: 100 to 15000 (FPM) [0.5 to 75.0 (m/s)]

3.5.13.2.2. AO2 UM = CFM [L/s]

Default: {3000 x AREA} (CFM) [{15000 x AREA} (L/s)]
Optional Settings: 5 to 999999 (CFM) [5 to 999999 (L/s)]

EBTRON, Inc • 1663 Hwy 701 S., Loris, SC 29569 • Toll Free: 800-2EBTRON (232-8766) • Fax: 843-756-1838 • EBTRON.com

3.5.13.3. -F PROBE TYPE

3.5.13.3.1. AO2 UM = FPM [m/s]

Default: 10000 (FPM) [50.0 (m/s)]
Optional Settings: 100 to 15000 (FPM) [0.5 to 75.0 (m/s)]

3.5.13.3.2. AO2 UM = CFM [L/s]

Default: {10000 x AREA} (CFM) [{50000 x AREA} (L/s)]
Optional Settings: 5 to 999999 (CFM) [5 to 999999 (L/s)]

3.5.13.4. ALL PROBE TYPES

ⓘ *Some B.A.S. application controllers use "span" rather than minimum- and full-scales. The span is equal to the full-scale – minimum scale and the offset is equal to the minimum scale.*

ⓘ *EBTRON airflow measurement accuracy is percent of reading. Decreasing the full-scale does not improve measurement accuracy. Today's application controllers generally have sufficient accuracy and input resolution to use the default output scaling of the transmitters.*

Note: Sections 3.5.14. only applies when AO2 ASGN=ALRM, FA or TRBL.

3.5.14. AO2 Output on an Inactive Notification Alarm [NO FAULT]

The output of AO2 when the notification alarm status is inactive.

[Menu path: SETTINGS >↓ ANALOG OUT >↓ NO FAULT]

Default: HI (output is set to 100%)
Optional Settings: LO (output is set to 0%)

Note: Sections 3.5.15. to 3.5.18. only apply to Advantage IV GTx116e remote transmitters that have the humidity sensor option, /H, provided with the -P sensor probe type.

3.5.15. AO3 Assignment [AO3 ASGN]

The object assigned to analog output AO3.

[Menu path: SETTINGS >↓ ANALOG OUT >↓ AO3 ASGN]

Default: The current parameter setting for H CONFIG
Optional Settings: None

3.5.16. AO3 Unit of Measure [AO3 UM]

The unit of measure of AO3.

[Menu path: SETTINGS >↓ ANALOG OUT >↓ AO3 UM]

The unit of measure is dependent on the RH sensor configuration.

3.5.16.1. H CONFIG=RH

Default: % RH
Optional Settings: None

EBTRON, Inc • 1663 Hwy 701 S., Loris, SC 29569 • Toll Free: 800-2EBTRON (232-8766) • Fax: 843-756-1838 • EBTRON.com

3.5.16.2. H CONFIG=ENTH

Default: Btu/lb [kJ/kg]
Optional Settings: None

3.5.16.3. H CONFIG=DPT

Default: F (°F) [C (°C)]
Optional Settings: None

3.5.17. AO3 Minimum Scale Reading [AO3 MS]

The value that results in an output signal of 0%.

[Menu path: SETTINGS >↓ ANALOG OUT >↓ AO3 MS]

The minimum scale reading is dependent on the RH sensor configuration.

3.5.17.1. H CONFIG=RH

Default: 0 (% RH)
Optional Settings: 0 to 100 (% RH)

3.5.17.2. H CONFIG=ENTH

Default: 0 (Btu/lb) [0 (kJ/kg)]
Optional Settings: -20 to 400 (Btu/lb) [-40 To 800 (kJ/kg)]

3.5.17.3. H CONFIG=DPT

Default: 0 (°F) [0 (°C)]
Optional Settings: -50 to 160 (°F) [-50 to 70 (°C)]

3.5.18. AO3 Full Scale Reading [AO3 FS]

The value that results in an output signal of 100%.

[Menu path: SETTINGS >↓ ANALOG OUT >↓ AO3 FS]

The full-scale reading is dependent on the RH sensor configuration.

3.5.18.1. H CONFIG=RH

Default: 100 (% RH)
Optional Settings: 0 to 100 (% RH)

3.5.18.2. H CONFIG=ENTH

Default: 200 (Btu/lb) [400 (kJ/kg)]
Optional Settings: -20 to 400 (Btu/lb) [-40 To 800 (kJ/kg)]

3.5.18.3. H CONFIG=DPT

Default: 100 (°F) [50 (°C)]
Optional Settings: -50 to 160 (°F) [-50 to 70 (°C)]

ⓘ *Some B.A.S. application controllers use "span" rather than minimum- and full-scales. The span is equal to the full-scale – minimum scale and the offset is equal to the minimum scale.*

EBTRON, Inc • 1663 Hwy 701 S., Loris, SC 29569 • Toll Free: 800-2EBTRON (232-8766) • Fax: 843-756-1838 • EBTRON.com

ⓘ *Relative humidity, enthalpy and dew point measurement accuracy is percent of reading. Decreasing the full-scale does not improve measurement accuracy. Today's application controllers generally have sufficient accuracy and input resolution to use the default output scaling of the transmitter*

3.6. RS-485 NETWORK SETTINGS

One RS-485 network connection is provided with the following transmitter models:

- Advantage IV Product Line
  - Models with the third digit of the model code equal to B, C, or N
- *EB-Flow2* Product Line
  - Models with the first digit after EF- equal to N

The RS-485 submenu contains the following parameters:

- NETOUT (RS-485 Network Protocol)
- NETADDR (Network Address)
- NETBAUD (Baud Rate)
- PARITY (Parity)
- NETDI (Device Instance Number)
- RS485 COM (Enable RS-485 Communications)

3.6.1. RS-485 Network Protocol [NETOUT]

The network protocol of the RS-485 connection.

[Menu path: SETTINGS >↓ RS485 > NETOUT]

Default: BACNET (BACnet MS/TP)
Optional Settings: MODBUS (Modbus RTU)

3.6.2. Network Address [NETADDR]

The network address of the transmitter.

[Menu path: SETTINGS >↓ RS485 >↓ NETADDR]

3.6.2.1. BACNET

Default: 2
Optional Settings:0 to 127

3.6.2.2. MODBUS

Default: 2
Optional Settings:0 to 247

3.6.3. Baud Rate [NETBAUD]

The baud rate of the network.

[Menu path: SETTINGS >↓ RS485 >↓ NETBAUD]

3.6.3.1. BACNET

Default: 76800 (bps)
Optional Settings: 38400, 19200, 9600

EBTRON, Inc • 1663 Hwy 701 S., Loris, SC 29569 • Toll Free: 800-2EBTRON (232-8766) • Fax: 843-756-1838 • EBTRON.com

3.6.3.2. MODBUS

Default: 19200 (bps)
Optional Settings: 76800, 38400, 9600

3.6.4. Parity [PARITY]

3.6.4.1. BACNET

Not applicable.

3.6.4.2. MODBUS

Sets the parity bit for network data checking.

[Menu path: SETTINGS >↓ RS485 >↓ PARITY]

Default: EVEN
Optional Settings: ODD, NONE1 (one stop bit), NONE2 (two stop bits)

3.6.5. Device Instance Number [NETDI]

3.6.5.1. BACNET

Sets the device instance number of the transmitter.

[Menu path: SETTINGS >↓ RS485 >↓ NETDI]

Default: 2
Optional Settings: 0 to 4194302

3.6.5.2. MODBUS

Not applicable.

3.6.6. Enable RS-485 Communications [RS485 COM]

Enable the transmitter for RS-485 network communications.

[Menu path: SETTINGS >↓ RS485 >↓ RS485 COM]

Default: OFF
Optional Settings: ON

Do not enable transmitter network communications until the transmitter network settings are properly configured to avoid addressing conflicts.

3.7. ETHERNET NETWORK SETTINGS

One Ethernet network connection is provided with the following transmitter models:

- Advantage IV Product Line
    - Models with the third digit of the model code equal to B, E or M

EBTRON, Inc • 1663 Hwy 701 S., Loris, SC 29569 • Toll Free: 800-2EBTRON (232-8766) • Fax: 843-756-1838 • EBTRON.com

The Ethernet network connection supports simultaneous communications.

- Modbus TCP is always enabled on port 502.
- BACnet IP, if enabled, is on port 47808.
- BACnet Ethernet may be enabled in lieu of BACnet IP.
- A simple web page showing airflow and temperature is available on port 80.

The ETHERNET submenu contains the following parameters:

- DHCP (Dynamic Host Configuration Protocol)
- IP (IP Address)
- MASK (Subnet Mask)
- GATE (Network Gateway)
- BACNET (BACnet Protocol)
- NETDI (Device Instance Number)
- UDPPORT (BACnet UDP Port)

3.7.1. Dynamic Host Configuration Protocol [DHCP]

Enable or disable DHCP.

[Menu path: SETTINGS >↓ ETHERNET > DHCP]

Default: ON
Optional Settings: OFF

When DHCP is ON the IP address, subnet mask and network gateway are automatically set by the DHCP server and cannot be modified at the transmitter.

3.7.2. IP Address [IP]

The IP address of the transmitter.

[Menu path: SETTINGS >↓ ETHERNET >↓ IP]

Default: 10.0.5.100
Optional Settings: Any valid IP address can be set by the network integrator.

The IP address is required to access Modbus TCP, BACnet IP or the web page. The IP address is not required for BACnet Ethernet. Use the ↑↓ pushbuttons to set the first octet value. Press ENT to move to the subsequent octet until all four octets are complete. Press ENT to save.

ⓘ *The IP address can only be changed when DHCP is OFF.*

3.7.3. Subnet Mask [MASK]

The subnet mask of the network.

[Menu path: SETTINGS >↓ ETHERNET >↓ MASK]

Default: 255.255.240.0
Optional Settings: Any valid subnet mask can be set by the network integrator.

The subnet mask is required to access Modbus TCP, BACnet IP or the web page. The subnet mask is not required for BACnet Ethernet. Use the ↑↓ pushbuttons to set the first octet value. Press ENT to move to the subsequent octet until all four octets are complete. Press ENT to save.

ⓘ *The subnet mask can only be changed when DHCP is OFF.*

EBTRON, Inc • 1663 Hwy 701 S., Loris, SC 29569 • Toll Free: 800-2EBTRON (232-8766) • Fax: 843-756-1838 • EBTRON.com

3.7.4. Network Gateway [GATE]

The network gateway.

[Menu path: SETTINGS >↓ ETHERNET >↓ GATE]

Default: 10.0.0.1
Optional Settings: Any valid network gateway can be set by the network integrator.

The network gateway is required to access Modbus TCP, BACnet IP or the web page. The network gateway is not required for BACnet Ethernet. Use the ↑↓ pushbuttons to set the first octet value. Press ENT to move to the subsequent octet until all four octets are complete. Press ENT to save.

ⓘ *The network gateway can only be changed when DHCP is OFF.*

3.7.5. BACnet Protocol [BACNET]

3.7.5.1. BACNET

Sets the BACnet protocol if BACnet IP or BACnet Ethernet is required.

[Menu path: SETTINGS >↓ ETHERNET >↓ BACNET]

Default: IP (BACnet IP)
Optional Settings: ETH (BACnet Ethernet)

3.7.5.2. MODBUS

Not applicable.

3.7.6. Device Instance Number [NETDI]

3.7.6.1. BACNET

Sets the device instance number if BACnet IP or BACnet Ethernet is used.

[Menu path: SETTINGS >↓ ETHERNET > ↓NETDI]

Default: The last octet of the MAC address

ⓘ *Only for GTM116e/GTM108e output card firmware 4.17 and later; all earlier firmware default is 2.*

Optional Settings: 0 to 4194302

3.7.6.2. MODBUS

Not applicable.

3.7.7. BACnet UDP Port [UDPPORT]

3.7.7.1. BACNET

Sets the UDP port if BACnet IP is used.

[Menu path: SETTINGS >↓ ETHERNET > ↓UDPPORT]

Default: 47808 (0xBAC0)
Optional Settings: 0 to 65535

EBTRON, Inc • 1663 Hwy 701 S., Loris, SC 29569 • Toll Free: 800-2EBTRON (232-8766) • Fax: 843-756-1838 • EBTRON.com

The port is used to distinguish the messages to the BACnet service running on the user datagram protocol (UDP). This value should match other BACnet IP devices to allow communication and in most cases this will not need to be modified.

3.7.7.2. MODBUS

Not applicable.

3.8. LON NETWORK SETTINGS

One Lonworks free topology connection is provided with the following transmitter models:

- Advantage IV Product Line
    - Models with the third digit of the model code equal to F or L

There are no transmitter settings for Lon.

3.9. RF-LINK SETTINGS

One proprietary wireless connection is provided with the following transmitter models:

- Advantage IV Product Line
    - Models with the third digit of the model code equal to W

The RF-Link submenu contains the following parameters:

- RFLINK COM (Enable and Pair Wireless Connection)

3.9.1. Enable and Pair Wireless Communications [RFLINK COM]

Use the following procedure if a RF-Link wireless connection is used to communicate with an EBTRON *Commissioner* or other RF-Link compatible EBTRON master transceiver:

Step 1 – Make sure the master transceiver is ON and in the ADD DEVICE mode.

Step 2 – Set the RFLINK COM parameter to ON to initiate pairing.

[Menu path: SETTINGS >↓ RF-LINK > RFLINK COM]

ⓘ *Setting RFLINK COM to ON will initiate pairing between the transmitter and the EBTRON master transceiver. The transmitter will display "CONNECTING" during pairing. When the connection is made "CONNECTED" will be displayed. If the connection fails "CON FAILED" will be displayed. Press ENT or ESC after pairing to return to submenu prompt for RFLINK COM. If the connection was successful, *RFLINK COM=ON will be displayed.*

⚠ *Do not have multiple master transceivers in the ADD DEVICE mode at the same time.*

3.10. USB SETTINGS

One USB port for connection to a Type A USB memory device “thumb drive” (by others) is provided on the following models:

- Advantage IV Product Line
    - Models with the third digit of the model code equal to D or U

EBTRON, Inc • 1663 Hwy 701 S., Loris, SC 29569 • Toll Free: 800-2EBTRON (232-8766) • Fax: 843-756-1838 • EBTRON.com

- Transmitters with a USB data logger log sensor node data at 5-minute intervals using Universal Time Coordinated (UTC) based on an onboard real-time clock, whenever power is applied to the transmitter. Data files are automatically appended on power-up.
    - The comma separated values (.CSV) filenames and file details are as follows:
        - DATAF.CSV - Average airflow and individual sensor node airflow
            - Format: Date Time, fw rev, Type, FPM, Sen 1,…,Sen 16
        - DATAT.CSV - Average temperature and individual sensor node temperature
            - Format: Date Time, fw rev, Type, deg F, Sen 1,…,Sen 16
    - If the /H humidity sensor option is provided, the following file is also provided:
        - DATARH.CSV - Relative humidity, enthalpy and dew point
            - Format: Date Time, fw rev, Type, %RH, DewPt, Enth

ⓘ *Date time format is MM/DD/YYYY hh:mm. Firmware revision is the firmware revision of the option card. Type refers to sensor probe type connected and can be "PROBE", "FAN", "FAN ARRAY", "BLEED", "NONE". Header on the DATAF.CSV and DATAT.CSV files will always show sensors 1-16, but actual data populated is based on number of sensors connected to the transmitter.*

ⓘ *For standard transmitters equipped with EB-Link Bluetooth® low energy interface, the time zone and interval can be modified by the user using EB-Link software.*

3.10.1. Enable or Disable the USB Port [USB WRITE]

Enable or disable the write capability on the USB port.

[Menu path: SETTINGS >↓ USB > USB WRITE]

3.10.1.1. INSERTING A USB MEMORY DEVICE ("THUMB DRIVE")

Install the USB memory device into the USB connector on the option card to start logging data.

It is a good practice to set the transmitter power switch to the "OFF" position before inserting the thumb drive memory device.

The USB port must be enabled to log data. Transmitters are shipped with the USB port parameter USB WRITE set to "ON", which enables the port.

If the transmitter had been previously used to log data, the USB WRITE parameter would most likely have been set to "OFF". To enable the USB WRITE parameter and start logging data, press the ↑↓ arrow buttons simultaneously to enter the MAIN MENU. The SETTINGS menu is displayed. Press the ENT button to select the top of the SETTINGS submenu category. Press the ↓ button until the USB submenu category is visible. Press the ENT button again to enter the USB submenu. Set the USB WRITE parameter to "ON".

3.10.1.2. REMOVING A USB MEMORY DEVICE

Remove the USB memory device from the USB connector on the option card after data logging is complete and the USB port has been disabled by setting the USB WRITE parameter to "OFF".

Disable the USB port to stop logging data. Press the ↑↓ arrow buttons simultaneously to enter the MAIN MENU. The SETTINGS menu is displayed. Press the ENT button to select the top of the SETTINGS submenu category. Press the ↓ button until the USB submenu category is visible. Press the ENT button again to enter the USB submenu. Set the USB WRITE parameter to "OFF".

⚠ *Always set the USB WRITE parameter to "OFF" before removing the USB memory device to avoid data loss/and or damage.*

Remove the USB memory device.

EBTRON, Inc • 1663 Hwy 701 S., Loris, SC 29569 • Toll Free: 800-2EBTRON (232-8766) • Fax: 843-756-1838 • EBTRON.com

It is a good practice to set the transmitter power switch to the "OFF" position before removing the USB memory device.

3.11. EB-LINK SETTINGS

The EB-Link is only available and provided with Advantage IV - Gold Series transmitters.

The EB-Link Reader application does not support dual location transmitters or the -B probe type.

The EB-Link Reader application is available for Android and iOS operating systems. Go to the appropriate application store for the desired operating system, search for EBTRON, and download the application. The EB-Link interface card is provided with all Advantage IV - Gold Series transmitters. The EB-Link Reader application is provided free of charge.

The EB-Link interface uses Bluetooth® Low Energy to pass information to a smart phone or tablet. The application provides real-time viewing of the average airflow and temperature measured by the transmitter. If the transmitter is provided with the /H humidity sensor option, humidity, dewpoint, and enthalpy is also provided. The reader also provides individual sensor node airflow and temperature data for near instantaneous traverses of duct velocities and temperatures. Individual fan airflow rates are available when the FAN TYPE is set to ARRAY using the ARRAY WIZARD. In addition, the reader provides a complete diagnostic text file output that can be viewed by the user and/or e-mailed to EBTRON customer service for analysis.

The application opens to the "SCAN FOR TRANSMITTERS" screen and displays all nearby transmitters that are detected. Transmitters are continuously scanned while the application is on this screen. Select a transmitter by name. The name is determined by the NAME parameter.

The NAME parameter defaults to the transmitter serial number unless a location name was provided with the order or the NAME parameter was modified by the user in the field.

Once a transmitter is selected and a connection is made, the application moves to the live data screen that shows the real-time average volumetric airflow rate, average velocity, area, velocity weighted temperature and average temperature. Select the menu button (☰) to navigate to other functions of the application, such as traverse data and diagnostics. Traverse and diagnostic data can be saved and e-mailed directly from the application.

In most installations, the Bluetooth signal can be read up to 20 feet from the transmitter with the transmitter cover installed (line of sight, no obstructions).

Some mechanical environments have excessive extraneous radio signals. Moving your position, or even hand position, in some environments may improve connectivity if difficulty in locating transmitters is experienced.

The EB-LINK submenu contains the following parameters:

- EB-LK INTG (EB-Link Integration)
- EB-LK STAT (EB-Link Status)

EBTRON, Inc • 1663 Hwy 701 S., Loris, SC 29569 • Toll Free: 800-2EBTRON (232-8766) • Fax: 843-756-1838 • EBTRON.com

3.11.1. EB-Link Integration [EB-LK INTG]

The integration buffer size for the running average of the average and individual sensor node airflow rates output to the EB-Link interface card.

[Menu path: SETTINGS >↓ EB-LINK >↓ EB-LK INTG]

Default: 100
Optional Settings: 1 to 999 (1 to 300 for -F/An probe types)

Transmitters calculate the airflow every 300 milliseconds. The integration buffer is used to smooth real-time airflow data output to the EB-Link Reader. The default integration of 100 is the running average (first in, first out) of the average of all sensor nodes over the preceding 30 second time period.

⚠ *Be certain the HVAC system is not changing faster than the integration buffer is set to ensure accurate measurement data.*

Note: Section 3.11.2. only applies to GTx116e and GTx108e transmitters. The Bluetooth® Low Energy transceiver of all other Gold Series transmitters is disabled by physically removing the transceiver card from the main circuit board.

3.11.2. EB-Link Status [EB-LK STAT]

Enables/disables the Bluetooth® Low Energy transceiver in the transmitter.

[Menu path: SETTINGS >↓ EB-LINK >↓ EB-LK STAT]

Default: ON
Optional Settings: OFF

3.12. AIRFLOW ALARM SETTINGS

A high/low airflow notification alarm is provided with all models covered in this manual. An “active” alarm is displayed on the LCD and can be assigned to analog output AO2 or the contact closure relay (relay only available with EF-x2000 transmitters).

ⓘ *The airflow alarm is only applicable to location 1 on dual location transmitters.*

ⓘ *The -B probe type high/low airflow alarm is configured as a high/low pressure alarm when DP CONVERT=YES.*

To assign the alarm to analog output, AO2, see “AO2 Assignment”. AO2 becomes a binary high/low output with the inactive state based on the setting for NO FAULT.

To assign the alarm to relay, R1 (EF-x2000 only), see “R1 Assignment”.

ⓘ *If the alarm is assigned to AO2 the default output on an inactive alarm, NO FAULT, is set to HI (100% output, or positive notification, on an inactive alarm). NO FAULT can be set to LO (0% output) on an inactive alarm, if desired. See “AO2 Output on an Inactive Notification Alarm” for more information.*

The ALARM submenu contains the following parameters:

- LO ALRM (Low Alarm Enable)
- HI ALRM (High Alarm Enable)
- ALRM UM (Alarm Units of Measure)
- SETPOINT (Alarm Setpoint)
- TOL (Alarm Tolerance)

EBTRON, Inc • 1663 Hwy 701 S., Loris, SC 29569 • Toll Free: 800-2EBTRON (232-8766) • Fax: 843-756-1838 • EBTRON.com

- DELAY (Alarm Delay)
- ZERO OFF (Alarm on Zero Flow)
- RESET (Alarm Reset Method)

3.12.1. Low Alarm Enable [LO ALRM]

Enable the low airflow alarm.

[Menu path: SETTINGS >↓ ALARM >↓ LO ALRM]

Default: OFF
Optional Settings: ON

An enabled low airflow alarm results in an “active” alarm state when the average airflow rate measured by the transmitter falls below the alarm setpoint less tolerance (alarm state = “outside”) for the entire delay period specified. The alarm can be configured to reset automatically or require manual reset when the alarm state returns to “normal”. The alarm can be disabled when the airflow rate output is 0% (either measured or forced to 0% by the low limit cutoff) to disable alarming when the system is in “off” or “unoccupied” modes.

3.12.2. High Alarm Enable [HI ALRM]

Enable the high airflow alarm.

[Menu path: SETTINGS >↓ ALARM >↓ HI ALRM]

Default: OFF
Optional Settings: ON

An enabled high airflow alarm results in an “active” alarm state when the average airflow rate measured by the transmitter exceeds the alarm setpoint plus tolerance (alarm state = “outside”) for the entire delay period specified. The alarm can be configured to reset automatically or require manual reset when the alarm state returns to “normal”. The alarm can be disabled when the airflow rate output is 0% (either measured or forced to 0% by the low limit cutoff) to disable alarming when the system is in “off” or “unoccupied” modes.

3.12.3. Alarm Units of Measure [ALRM UM]

3.12.3.1. ALL PROBE TYPES EXCEPT THE -B PROBE TYPE CONFIGURED FOR PRESSURE (DPCONVERT=YES)

The airflow units of measure used to activate the airflow alarm.

[Menu path: SETTINGS >↓ ALARM >↓ ALRM UM]

Default: FPM [m/s]
Optional Settings: CFM [L/s]

ⓘ *The area parameter(s) [AREA] of -F and -U and -B probe types must be entered (i.e. not equal to the factory default value of {null}) for the LCD UM=CFM [L/s] option to be available. “ENTER AREA <OK>” will be displayed when CFM [L/s] is selected. Press ENT or ESC to return to the “*ALRM UM=FPM [L/s]” menu prompt.*

EBTRON, Inc • 1663 Hwy 701 S., Loris, SC 29569 • Toll Free: 800-2EBTRON (232-8766) • Fax: 843-756-1838 • EBTRON.com

3.12.3.2. -B PROBE TYPE CONFIGURED FOR PRESSURE (DPCONVERT=YES)

The pressure units of measure used to activate the pressure alarm.

[Menu path: SETTINGS >↓ ALARM >↓ ALRM UM]

Default: iWG [Pa]
Optional Settings: None

3.12.4. Alarm Setpoint [SETPNT]

The setpoint used to activate the airflow alarm.

[Menu path: SETTINGS >↓ ALARM >↓ SETPOINT]

3.12.4.1. ALL PROBE TYPES EXCEPT THE -B PROBE TYPE

3.12.4.1.1. ALRM UM = FPM [m/s]

Default: 0
Optional Settings: 0 to 999999 (FPM) [0.00 to 99.9 9 (m/s)]

3.12.4.1.2. ALRM UM = CFM [L/s]

Default: 0
Optional Settings: 0 to 999999 (CFM) [0.00 to 999999 (L/s)]

3.12.4.2. -B PROBE TYPE

ⓘ *The optional settings range is ± if DIRECTION=BI.*

3.12.4.2.1. ALRM UM = FPM [m/s]

Default: 0
Optional Settings: 0 to 999999 (FPM) [0.00 to 99.99 (m/s)]

3.12.4.2.2. ALRM UM = CFM [L/s]

Default: 0
Optional Settings: 0 to 999999 (CFM [L/s])

3.12.4.2.3. ALRM UM = iWG [Pa]

Default: 0
Optional Settings: 0.00 to 5.00 (iWG) [0 to 1250 (Pa)]

3.12.5. Alarm Tolerance [TOL]

The airflow tolerance, as a percentage of the setpoint, used to activate the airflow alarm.

[Menu path: SETTINGS >↓ ALARM >↓ TOL]

Default: Greater of 15% or 20 FPM [0.10 m/s]
Optional Settings: Greater of 5% or 20 FPM [0.10 m/s] to 100% or 20 FPM [0.10 m/s]

ⓘ *20 FPM [0.10 m/s] is less than 0.0001 iWG [0.025 Pa] when a -B probe type is configured for pressure and the setpoint is set to 0.*

EBTRON, Inc • 1663 Hwy 701 S., Loris, SC 29569 • Toll Free: 800-2EBTRON (232-8766) • Fax: 843-756-1838 • EBTRON.com

3.12.6. Alarm Delay [DELAY]

The delay, in minutes, that the alarm state must be “outside”, to activate the airflow alarm.

[Menu path: SETTINGS >↓ ALARM >↓ DELAY]

Default: 2min (minutes)
Optional Settings: 0min to 15min

3.12.7. Alarm on Zero Flow [ZERO OFF]

Disable the airflow alarm when the airflow output of the transmitter is set to 0%.

[Menu path: SETTINGS >↓ ALARM >↓ ZERO OFF]

Default: YES
Optional Settings: NO

Use the low limit cutoff (LLIMIT) to improve functionality of the airflow alarm in systems that have “off or “unoccupied” modes.

3.12.8. Alarm Reset Method [RESET]

Automatically reset (clear) the alarm when the fault is inactive or require manual reset.

[Menu path: SETTINGS >↓ ALARM >↓ RESET]

Default: AUTO
Optional Settings: MANUAL

RESET = AUTO. The alarm is automatically reset when the alarm state returns to “normal” or the alarm is manually reset.

RESET = MANUAL. The alarm must be manually reset by pressing the ESC button.

An active alarm can be reset manually by pressing the ESC pushbutton. The alarm state will return to “normal”. If the airflow is outside of the specified setpoint and tolerance, the alarm state returns to “outside” and the delay timer is reset.

3.13. FAN AIRFLOW ALARM

The fan alarm is available on Advantage IV transmitters when the FAN TYPE is set to ARRAY using the ARRAY WIZARD. The fan alarm can be used to detect a malfunctioning fan in an array, provide notification of the malfunction and/or ignore the airflow measured from the fan. The latter being particularly useful if a fan has failed without a backdraft damper and there is still indication of airflow.

An “active” alarm is displayed on the LCD for the fan numbers in a fault condition and can be assigned to analog output AO2 as a multi-state analog output based on the first fan number to indicate an active fault.

A probe number is labeled on each probe hang tag (Probe x of y). The leftmost receptacle used on the transmitter when viewed from the display side is always designated as *Connector 1 (C1)*. Additional connectors increment sequentially from left to right on transmitters with more than one receptacle. Fan array models with two rows of 4 receptacles, increment left to right, *C1* to *C4* on the topmost row closest to the cover, then left to right, *C5* to *C8* on the lower most row.

Probe numbers (P1 to Py) are dynamically assigned by the transmitter after initial power up, left to right, based on the connector receptacle used.

EBTRON, Inc • 1663 Hwy 701 S., Loris, SC 29569 • Toll Free: 800-2EBTRON (232-8766) • Fax: 843-756-1838 • EBTRON.com

⚠ *Fan array models (-F/An) must follow this convention if two probes are located in each fan inlet (i.e. put probes for fan 1 in C1 and C2, fan 2 in C3 and C4, etc.)*

To assign the alarm to analog output, AO2, see “AO2 Assignment”. AO2 becomes a multi-state analog output with the inactive state based on the setting for NO FAULT.

An active alarm will set AO2 in increments of 10% of the full-scale output based on the first fan number to indicate an active fault (ex. Fan 2 fault will output 20% of the full-scale).

The FAN ALARM submenu contains the following parameters:

- FAN ALRM (Fan Airflow Alarm Type)
- ON ALRM (Action on Active Fan Alarm)
- ALRM UM (Fan Alarm Units of Measure)
- SETPNT (Fan Alarm Setpoint)
- DELAY (Fan Alarm Delay)
- ZERO OFF (Fan Alarm on Zero Flow)
- RESET (Fan Alarm Reset Method)

There are three alarm types, MIN, DEV and MAX, available that target specific failures with the array.

3.13.1. Fan Airflow Alarm Type [FAN ALRM]

Enable and select one of the fan airflow alarms.

[Menu path: SETTINGS >↓ FAN ALARM > FAN ALRM]

Default: OFF
Optional Settings: DEV, MIN, %MAX

⚠ *Care should be taken when selecting the appropriate fan alarm. Fans that have completely failed in an array that do not have backdraft or isolation dampers may have significant reverse airflow through the fan. The EBTRON -F probe will read approximately a false high reading when airflow across the sensor is in the reverse direction.*

FAN ALRM = DEV. The alarm becomes active when one fan in the array is deviating by a user specified percentage, high or low, from the other fans.

The DEV fan alarm is generally the most useful method for detecting fan failures when all fans are the same size and operating at the same speed.

FAN ALRM = MIN. The alarm becomes active when the airflow rate falls below a user defined minimum airflow rate.

FAN ALRM = %MAX. The alarm becomes active when the airflow rate falls below a user defined minimum airflow percentage of the maximum airflow rate stored by the transmitter for each fan in the array.

Set the fan speed to maximum during setup to store the highest airflow rate for the %MAX fan alarm.

EBTRON, Inc • 1663 Hwy 701 S., Loris, SC 29569 • Toll Free: 800-2EBTRON (232-8766) • Fax: 843-756-1838 • EBTRON.com

3.13.2. Action of Active Fan Alarm [ON ALRM]

Enable and select one of the fan airflow alarms.

[Menu path: SETTINGS >↓ FAN ALARM >↓ ON ALRM]

Default: KEEP
Optional Settings: IGNR

ON ALRM = KEEP. Use the airflow of the fan in active alarm to determine the total airflow rate for the fan array.

ON ALRM = IGNR. Ignore (don't use) the airflow of the fan in active alarm to determine the total airflow rate for the fan array.

Note: Section 3.13.3. only applies when FA TYPE=MIN.

3.13.3. Fan Alarm Units of Measure [ALRM UM]

The airflow units of measure used to activate the fan airflow alarm.

[Menu path: SETTINGS >↓ FAN ALARM >↓ ALRM UM]

Default: FPM [m/s]
Optional Settings: CFM [L/s]

ⓘ *The area parameter(s) [AREA] of -F probe types must be entered (i.e. not equal to the factory default value of {null}) for the LCD UM=CFM [L/s] option to be available. "ENTER AREA <OK>" will be displayed when CFM [L/s] is selected. Press ENT or ESC to return to the "*ALRM UM=FPM [L/s]" menu prompt.*

3.13.4. Fan Alarm Setpoint [SETPNT]

3.13.4.1. DEV AND %MAX ALARMS

The setpoint, as a percentage of airflow, used to activate the fan airflow alarm.

[Menu path: SETTINGS >↓ FAN ALARM >↓ SETPOINT]

Default: 25%
Optional Settings: 10% to 100%

3.13.4.2. MIN ALARM

The airflow setpoint, in the specified units of measure, used to activate the fan airflow alarm.

[Menu path: SETTINGS >↓ FAN ALARM >↓ SETPOINT]

3.13.4.2.1. ALRM UM = FPM [m/s]

Default: 0
Optional Settings: 0 to 999999 (FPM) [0.00 to 99.99 (m/s)]

3.13.4.2.2. ALRM UM = CFM [L/s]

Default: 0
Optional Settings: 0 to 999999 (CFM [L/s])

EBTRON, Inc • 1663 Hwy 701 S., Loris, SC 29569 • Toll Free: 800-2EBTRON (232-8766) • Fax: 843-756-1838 • EBTRON.com

3.13.5. Fan Alarm Delay [DELAY]

The delay, in minutes, that the alarm state must be “outside”, to activate the fan airflow alarm.

[Menu path: SETTINGS >↓ FAN ALARM >↓ DELAY]

Default: 2min (minutes)
Optional Settings: 0min to 15min

3.13.6. Fan Alarm on Zero Flow [ZERO OFF]

Disable the fan airflow alarm when the airflow output of the transmitter is set to 0%.

[Menu path: SETTINGS >↓ FAN ALARM >↓ ZERO OFF]

Default: YES
Optional Settings: NO

Use the low limit cutoff (LLIMIT) to improve functionality of the airflow alarm in systems that have “off or “unoccupied” modes.

3.13.7. Fan Alarm Reset Method [RESET]

Automatically reset (clear) the alarm when the fault is inactive or require manual reset.

[Menu path: SETTINGS >↓ FAN ALARM >↓ RESET]

Default: AUTO
Optional Settings: MANUAL

RESET = AUTO. The alarm is automatically reset when the alarm state returns to “normal” or the alarm is manually reset.

RESET = MANUAL. The alarm must be manually reset by pressing the ESC button.

An active alarm can be reset manually by pressing the ESC pushbutton. The alarm state will return to “normal”. If the airflow is outside of the specified setpoint and tolerance, the alarm state returns to “outside” and the delay timer is reset.

3.14. RELAY

Contact closure relay settings only apply to *EB-Flow2* transmitters.

The RELAY submenu contains the following parameters:

- R1 ASGN (Relay Assignment)
- R1 STATUS (Relay Normal Status)

3.14.1. Relay Assignment [R1 ASGN]

The object assigned to relay R1.

[Menu path: SETTINGS >↓ RELAY > R1 ASGN]

Default: NONE
Optional Settings: ALRM (airflow alarm) or TRBL (system trouble alarm)

See “Alarm Settings”, for more information on configuring built-in notification alarms.

EBTRON, Inc • 1663 Hwy 701 S., Loris, SC 29569 • Toll Free: 800-2EBTRON (232-8766) • Fax: 843-756-1838 • EBTRON.com

3.14.2. Relay Normal Status [R1 STATUS]

The normal, inactive, status of relay R1.

[Menu path: SETTINGS >↓ RELAY >↓ R1 STATUS]

Default: NO (normally open, N.O.)
Optional Settings: NC (normally closed, N.C.)

3.15. ADJUSTMENTS

Transmitters can be adjusted in the field when conditions warrant. Adjustments should only be made when there is reasonable certainty that the reference measurements are more accurate than the EBTRON measuring device.

ⓘ *If minimum placement guidelines cannot be achieved, installed accuracy may be compromised. Transmitters can be field adjusted to match a third-party measurement. Adjusted field measurements typically result in comparative readings within ±3% of the third-party measurement. Be advised that the third-party measurement may have uncertainties greater than or equal to ±10% and should only be used to adjust the airflow measurement device if the probes do not meet minimum placement requirements and the discrepancy is greater than the uncertainty of the third-party source.*

The ADJUSTMENTS submenu contains the following parameters:

- FLOW ADJ (Airflow Adjustment Enable/Disable)
- F_ADJ UM (Airflow Adjustment Units of Measure)
- PRESS ADJ (Pressure Adjustment Enable/Disable)
- FAW SMPLS (Flow Adjust Wizard Samples)
- GAIN (Airflow or Pressure Gain Factor)
- OFF (Airflow or Pressure Offset Factor)

3.15.1. Airflow Adjustment Enable/Disable [FLOW ADJ]

Enable or disable third-party adjustments made to modify the factory airflow measurement of the transmitter.

[Menu path: SETTINGS >↓ ADJUSTMENTS > FLOW ADJ]

Default: OFF
Optional Setting: ON

ⓘ *If minimum placement guidelines cannot be achieved, installed accuracy may be compromised. Transmitters can be field adjusted to match a third-party measurement. Adjusted field measurements typically result in comparative readings within ±3% of the third-party measurement. Be advised that the third-party measurement may have uncertainties greater than or equal to ±10% and should only be used to adjust the airflow measurement device if the probes do not meet minimum placement requirements and the discrepancy is greater than the uncertainty of the third-party source.*

ⓘ *Airflow adjustments are not available for -B probe types when DP CONVERT is set to YES.*

⚠ *Enabling user entered offset and gain values overrides EBTRON's NIST traceable airflow calibration.*

EBTRON, Inc • 1663 Hwy 701 S., Loris, SC 29569 • Toll Free: 800-2EBTRON (232-8766) • Fax: 843-756-1838 • EBTRON.com

3.15.2. Airflow Adjustment Units of Measure [F_ADJ UM]

3.15.2.1. ALL PROBE TYPES EXCEPT THE -B PROBE TYPE CONFIGURED FOR PRESSURE (DPCONVERT=YES)

The airflow units of measure of the offset parameter(s) adjustment coefficient(s).

[Menu path: SETTINGS >↓ ADJUSTMENTS >↓ F_ADJ UM]

Default: CFM [L/s]
Optional Settings: FPM [m/s]

*The area parameter(s) [AREA] of -F, -U and -B probe types must be entered (i.e. not equal to the factory default value of {null}) for the F_ADJ UM=CFM [L/s] default to be available. The optional setting of FPM [m/s] is the default value when the area parameter is not entered. "ENTER AREA <OK>" will be displayed when CFM [L/s] is selected. Press ENT or ESC to return to the "*F_ADJ UM=FPM [L/s]" menu prompt.*

The OFFSET adjustment is modified for CFM [L/s] or FPM [m/s] using the appropriate area parameter(s) if the F_ADJ UM is changed after the coefficient(s) for the offset parameter(s) is entered.

3.15.2.2. -B PROBE TYPE CONFIGURED FOR PRESSURE (DPCONVERT=YES)

Not applicable.

3.15.3. Pressure Adjustment Enable/Disable [PRESS ADJ]

Pressure adjustment only applies to the -B probe type.

3.15.3.1. DPCONVERT = NO

Not applicable.

3.15.3.2. DPCONVERT = YES

Enable or disable adjustments made to modify the factory pressure measurement of the transmitter.

[Menu path: SETTINGS >↓ ADJUSTMENTS >↓ PRESS ADJ]

Default: OFF
Optional Setting: ON

Pressure adjustments will not be converted to airflow adjustments if DP CONVERT is changed from ON to OFF. Pressure adjustments will be saved but not visible when DP CONVERT is set to OFF.

Adjusting the -B probe type to a known pressure reference typically improves -B probe type pressure estimation.

EBTRON, Inc • 1663 Hwy 701 S., Loris, SC 29569 • Toll Free: 800-2EBTRON (232-8766) • Fax: 843-756-1838 • EBTRON.com

3.15.4. FAW Samples [FAW SMPLS]

The sample size used to determine the average, uncorrected, total airflow rate of the transmitter to calculate GAIN and OFFSET coefficients when the FLOW ADJUST WIZARD (FAW) tool is used (Section 4).

[Menu path: SETTINGS >↓ ADJUSTMENTS >↓ FAW SMPLS]

Default: 100
Optional Settings: 1 to 999

Transmitters calculate the airflow every 300 milliseconds. The default integration of 100 calculates the average of all sensor nodes over the preceding 30 second time period.

⚠ *Be certain the HVAC system is not changing faster than the integration buffer is set to ensure accurate measurement data.*

3.15.5. Airflow or Pressure Gain Adjustment [GAIN]

The third-party gain coefficient used to modify the airflow or pressure measurement of the transmitter.

[Menu path: SETTINGS >↓ ADJUSTMENTS >↓ GAIN]

Default: 1.000
Optional Setting: 0.100 to 9.999

3.15.5.1. ALL PROBE TYPES EXCEPT -B CONFIGURED FOR DPCONVERT = YES

The gain adjustment modifies the airflow output by multiplying the unadjusted average airflow by the gain coefficient. The GAIN coefficient can be entered manually or automatically using the FLOW ADJUST WIZARD (FAW) when a one- or two-point adjustment is desired.

ⓘ *If the transmitter is configured for two locations, parameters for GAIN1 and GAIN2 will be displayed in lieu of GAIN.*

Use a gain factor rather than an offset factor when a single point adjustment is used.

3.15.5.2. -B PROBE TYPE CONFIGURED FOR DPCONVERT = YES

The gain adjustment modifies the pressure output by multiplying the unadjusted average pressure by the gain coefficient. The GAIN coefficient is entered manually.

3.15.6. Airflow or Pressure Offset Adjustment [OFF]

The third-party offset coefficient used to modify the airflow or pressure measurement of the transmitter.

[Menu path: SETTINGS >↓ ADJUSTMENTS >↓ OFF]

3.15.6.1. ALL PROBE TYPES EXCEPT -B CONFIGURED FOR DPCONVERT = YES

The offset adjustment modifies the airflow output by adding or subtracting the unadjusted average airflow by the offset coefficient. The OFFSET coefficient can be entered manually or automatically using the FLOW ADUST WIZARD (FAW) when a two-point adjustment is desired.

ⓘ *If the transmitter is configured for two locations, parameters for OFF1 and OFF2 will be displayed in lieu of OFF.*

⚠ Offset values must be entered in the units of F_ADJ UM.

EBTRON, Inc • 1663 Hwy 701 S., Loris, SC 29569 • Toll Free: 800-2EBTRON (232-8766) • Fax: 843-756-1838 • EBTRON.com

3.15.6.2. ALL PROBE TYPES EXCEPT THE -B PROBE TYPE CONFIGURED FOR PRESSURE (DPCONVERT=YES)

3.15.6.2.1. F_ADJ_UM = FPM [m/s]

Default: 0
Optional Settings: -99999 to 99999 (FPM) [-99.99 to 99.99 (m/s)]

3.15.6.2.2. F_ADJ UM = CFM [L/s]

Default: 0
Optional Settings: -99999 to 99999 (CFM [L/s])

3.15.6.3. -B PROBE TYPE CONFIGURED FOR PRESSURE (DPCONVERT=YES)

Default: 0
Optional Setting: -5.000 to 5.000 (iWG) [-1250 to 1250 (Pa)]

3.15.7. Temperature Adjustment

Refer to Section 5 if temperature adjustments are required.

ⓘ *The temperature output of the EBTRON device is velocity-weighted and more accurate than the simple arithmetic average obtained by a field temperature measurement or traverse. A field temperature measurement will not match the velocity-weighted output shown on the display. The arithmetic average of the sensor nodes can be viewed through the DIAGNOSTICS Menu.*

⚠ *Making an adjustment to the temperature overrides EBTRON's NIST traceable temperature calibration.*

Note: Section 3.15.8. only applies to Advantage IV GTx116e remote transmitters that have the humidity sensor option, /H, provided with the -P sensor probe type.

3.15.8. Relative Humidity Adjustment

Refer to Section 5 if relative humidity adjustments are required.

ⓘ *The relative humidity output of the EBTRON device is velocity-weighted and more accurate than the simple arithmetic average obtained by a field relative humidity measurement or traverse. A field relative humidity measurement will not match the velocity-weighted output shown on the display. The arithmetic average of the relative humidity sensor(s) can be viewed through the DIAGNOSTICS Menu.*

EBTRON, Inc • 1663 Hwy 701 S., Loris, SC 29569 • Toll Free: 800-2EBTRON (232-8766) • Fax: 843-756-1838 • EBTRON.com

4. SECTION OVERVIEW

This section discusses the built-in tools provided with each transmitter to facilitate setup, startup and verification.

4.1. TOOLS MENU ACCESS AND NAVIGATION

The TOOLS menu contains the following submenu categories:

- AREA WIZ (Area Wizard)
- FAN WIZ (Fan Area Wizard)
- FAW (Flow Adjust Wizard)
- TEST OUT (Test Analog Output)
- TEST RELAY (Test Relay)
- LOCK (Lock Parameters and Wizards)

Simultaneously press the ↑↓ pushbuttons during normal operation to enter the main menu. The transmitter will continue to operate normally in the background.

The SETTINGS menu will be displayed. Press ↓ once and the TOOLS menu will be displayed. Press the ENT pushbutton to select the top of the TOOLS submenu category.

The TOOLS menu block diagram is shown below.

FIGURE 4-1 TOOLS MENU BLOCK DIAGRAM

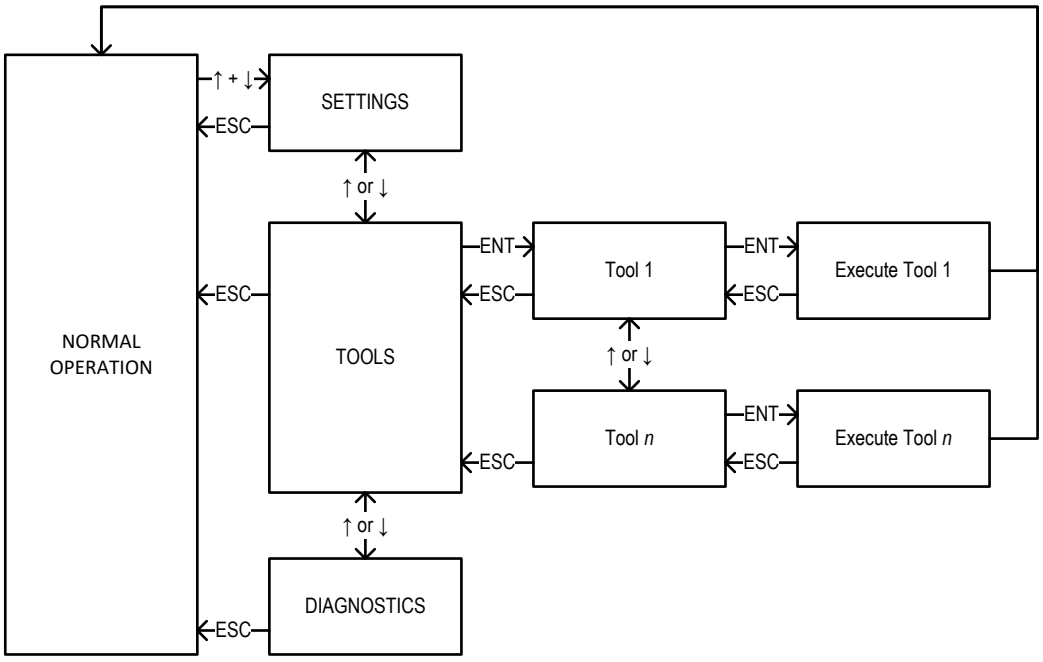

EBTRON, Inc • 1663 Hwy 701 S., Loris, SC 29569 • Toll Free: 800-2EBTRON (232-8766) • Fax: 843-756-1838 • EBTRON.com

FIGURE 4-2 SINGLE LINE DISPLAY MENU STRUCTURE

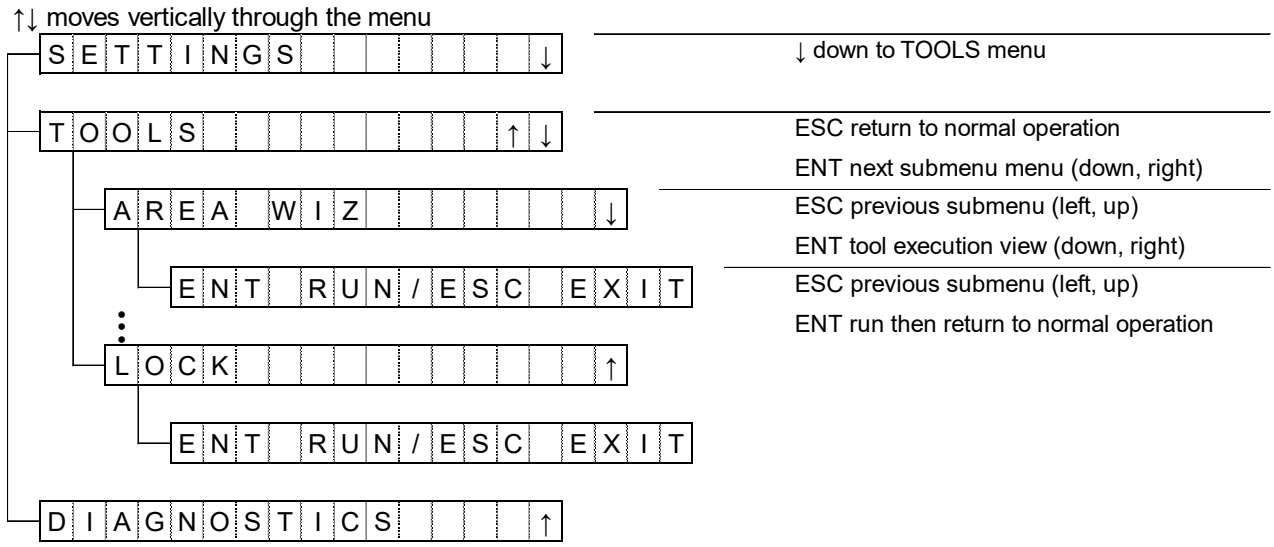

FIGURE 4-3 DUAL LINE DISPLAY MENU STRUCTURE

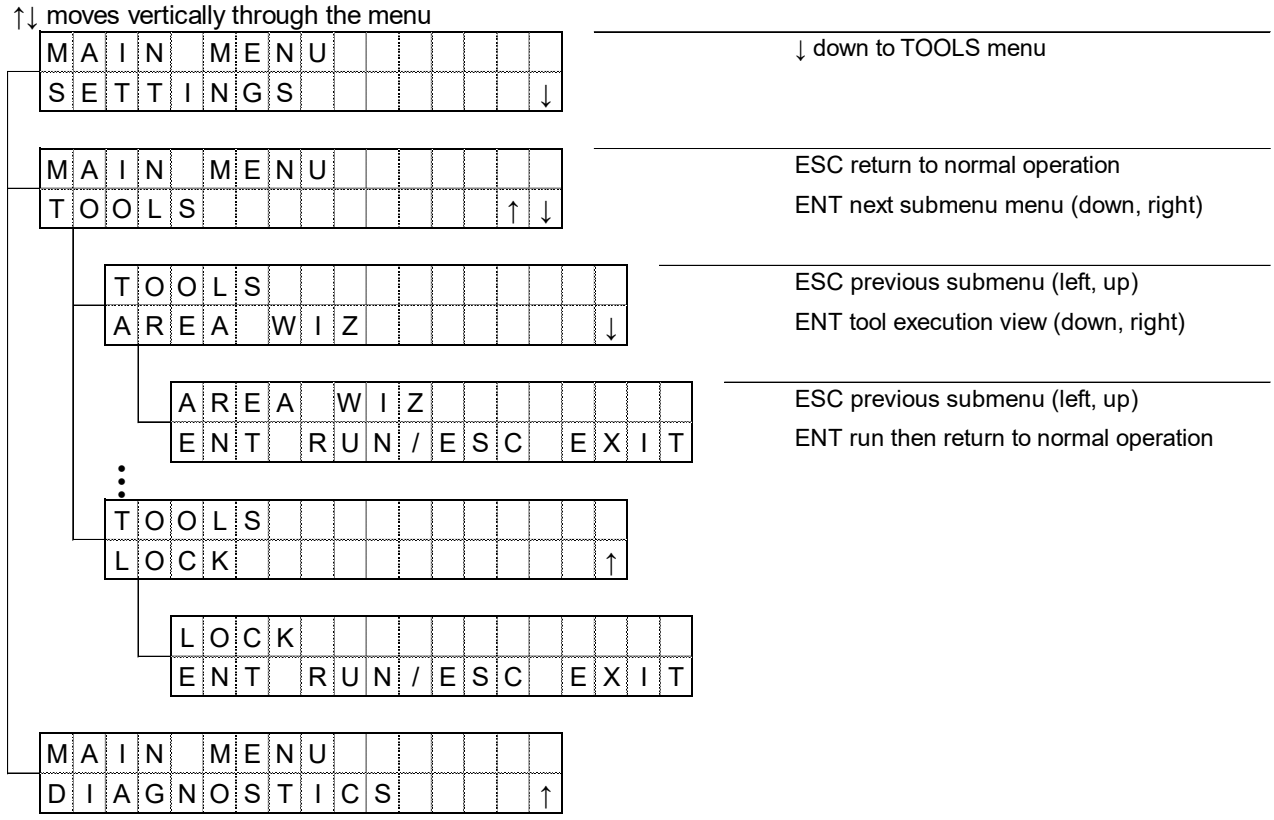

EBTRON, Inc • 1663 Hwy 701 S., Loris, SC 29569 • Toll Free: 800-2EBTRON (232-8766) • Fax: 843-756-1838 • EBTRON.com

4.2. AREA WIZARD [AREA WIZ]

The area of -U and -B probe types generally cannot be determined until the probes are installed. The factory default output is in velocity, FPM [m/s]. In some cases, the area of other probe types does not equal the area based on the original order size. The area is required when volumetric airflow, CFM [L/s], is desired. The area(s) can be entered manually by modifying the area parameter(s) via the SETTINGS menu or the area of each location can be entered using the AREA WIZARD (AREA WIZ) which is accessed via the TOOLS menu.

AREA WIZ (located in the TOOLS menu)

Use ↑↓ buttons to modify, {ENT} to accept and move to next prompt, {ESC} to move to previous prompt.

If the LOCK is enabled, pressing enter will indicate "CONFIG LOCKED" and this tool will not be available.

Navigate entire menu to step 7 to save settings. Press {ESC} at any time to exit without saving changes.

STEP	PROMPT	RESPONSE	DESCRIPTION	SKIP TO
1	LOCATION?	1↓	Location 1 of 2.	
		2↑	Location 2 of 2.	
			Note: This prompt will only be visible on 2 location devices. Single location devices start at prompt #2.	
2	SHAPE?	RECT↓	The duct or opening is square or rectangular.	4
		OVAL↑↓	The duct or opening is a flat oval.	4
		ROUND↑	The duct or opening is round.	
3	DIAM?	{null}↑	The free area duct or opening diameter, in inches [mm]. Value cannot be {null}.	6
4	WIDTH?	{null}↑	The free area duct or opening width, in inches [mm]. Value cannot be {null}.	
5	HEIGHT?	{null}↑	The free area duct or opening height, in inches [mm]. Value cannot be {null}.	
6	AREA	#####.###	Displays calculated AREA. ENT to move to next step. *Note: Dual location devices will indicate AREA1 or AREA2 in lieu of AREA.*	
7	SAVE?	YES↓	Save area to AREA parameter and return to normal operation.	
		NO↑	Do not save AREA parameter and return to normal operation.	

4.3. FAN AREA WIZARD [FAN WIZ]

The area of fan inlet (-F) probe types cannot be determined until the probes are installed. The factory default output is in velocity, FPM [m/s]. The area is required when volumetric airflow, CFM [L/s], is desired. The area can be entered manually by modifying the area parameter or the area of each fan can be entered using the FAN AREA SETUP WIZARD (FAN WIZ) accessed via the TOOLS menu.

The displayed units of measure of transmitters with the -F probe type default to FPM [m/s] since the factory default setting for area is *{null}* (no value). The displayed units of measure are automatically changed to CFM [L/s] when setup wizard changes are saved. The analog output units of measure, if applicable, remain at the factory default value of FPM [L/s].

4.3.1. Fan Arrays

Individual fan areas are used when the airflow of individual fans in a fan array is desired. Individual fan airflow rates are available via network variables and allow the advanced fan alarm capabilities of transmitter to be used. Once entered, individual fan areas can be modified by rerunning the setup wizard or manually via the SETTINGS menu.

Use the default output unit of measure and scaling of FPM [m/s] to determine CFM [L/s] with your B.A.S. Simply multiply the default full-scale velocity reading by the total area to determine the full-scale CFM [L/s] for the B.A.S.

EBTRON, Inc • 1663 Hwy 701 S., Loris, SC 29569 • Toll Free: 800-2EBTRON (232-8766) • Fax: 843-756-1838 • EBTRON.com

FAN WIZ (located in the TOOLS menu)

Use ↑↓ buttons to modify, {ENT} to accept and move to next prompt, {ESC} to move to previous prompt.

If the LOCK is enabled, pressing enter will indicate "CONFIG LOCKED" and this tool will not be available.

Navigate entire menu to step 14 to save settings. Press {ESC} at any time to exit without saving changes.

STEP	PROMPT	RESPONSE	DESCRIPTION	SKIP TO
1	CONFIG?	SWSI↓	Single inlet.	
		DWDI↑↓	Dual inlet.	
		ARRAY↑	Fan array.	4
2	LOCATION?	1↓	Location 1 of 2.	
		2↑	Location 2 of 2.	
			Note: This prompt will only be visible on 2 location devices. Single location devices start at prompt #3.	
3	DIAM?	{null}↑	The free area duct or opening diameter, in inches [mm]. Value cannot be {null}. *Note: The diameter should be determined at the upstream leading edge where sensor node is installed. The AREA of DWDI fans will be doubled. Dual location devices will indicate DIAM1 or DIAM2 in lieu of DIAM.*	14
4	FANS?	2↑↓	Number of fans in the array, 2 to 8.	
5	DISTR?	EQUAL↓	The number of sensors, 1 or 2, is the same for all fans in the array.	
		VAR↑	The number of sensors, 1 or 2, is not the same for all fans in the array.	
6	SENS/FAN?	1↓	1 sensor node per fan.	
		2↑	2 sensor nodes per fan.	
			Note: If DISTR is set to VAR, there will be a separate prompt for each fan and the SENS/FAN prompt will be followed with the fan number (i.e. SENS/FAN1 … SENS/FANn)	
7	AREA/FAN?	EQUAL↓	The area is equal for each fan in the array.	
		VAR↑	The area is different for at least one fan in the array.	
8	METHOD?	CALC↓	The area is calculated based on dimensions provided by user.	
		AREA↑	The area is directly entered by the user.	13
9	TYPE?	INLET↓	Probes are mounted in the fan inlet cone	
		DMPR↑	Probes are mounted in a backdraft damper	11
10	DIAM?	{null}↑	The free area duct or opening diameter, in inches [mm]. Value cannot be {null}. *Note: The diameter should be determined at the upstream leading edge where sensor node is installed. If AREA/FAN is set to VAR, there will be a separate prompt for each fan and the DIAM prompt will be followed with the fan number (i.e. DIAM1 … DIAMn).*	14
11	WIDTH?	{null}↑	The inside damper width, in inches [mm]. Value cannot be {null}. *If AREA/FAN is set to VAR, there will be a separate prompt for each fan and the WIDTH prompt will be followed with the fan number (i.e. WIDTH1 … WIDTHn).*	
12	HEIGHT?	{null}↑	The inside damper height, in inches [mm]. Value cannot be {null}. *If AREA/FAN is set to VAR, there will be a separate prompt for each fan and the HEIGHT prompt will be followed with the fan number (i.e. HEIGHT1 … HEIGHTn).*	14
13	AREA?	{null}↑	The area of the fan inlet, in sq ft [sq m] where the sensor node is installed. Value cannot be {null} *Note: The area should be determined at the upstream leading edge where sensor node is installed. Enter the area of one inlet on DWDI fans or a single fan in an array if AREA/FAN is set to EQUAL. If AREA/FAN is set to VAR, there will be a separate prompt for each fan and the AREA prompt will be followed with the fan number (i.e. AREA1…AREAn).*	
14	SAVE?	YES↓	Save changes and return to normal operation.	
		NO↑	Do not save changes and return to normal operation.	

EBTRON, Inc • 1663 Hwy 701 S., Loris, SC 29569 • Toll Free: 800-2EBTRON (232-8766) • Fax: 843-756-1838 • EBTRON.com

4.4. FLOW ADJUST WIZARD [FAW]

EBTRON airflow measurement devices are factory calibrated to NIST traceable standards. Field adjustment is not required when installed in accordance to published guidelines.

A flow adjust wizard is provided for installations where placement limitations warrant field adjustment of the factory calibration. The wizard can be run with using a one-point (gain only) or two-point (gain and offset). The FAW is not available for -B probe types set to convert airflow to pressure (DPCONVERT=YES).

ⓘ *If minimum placement guidelines cannot be achieved, installed accuracy may be compromised. Transmitters can be field adjusted to match a third-party measurement. Adjusted field measurements typically result in comparative readings within ±3% of the third-party measurement. Be advised that the third-party measurement may have uncertainties greater than or equal to ±10% and should only be used to adjust the airflow measurement device if the probes do not meet minimum placement requirements and the discrepancy is greater than the uncertainty of the third-party source.*

ⓘ *The factory default setting for the number of samples and units of measure can be modified via the SETTINGS MENU under the TOOLS submenu. The factory default number of samples is set to 100 (30 seconds) and the default units of measure is set to CFM [L/s] (as long as a valid area is provided).*

Increasing the number of samples may improve field adjustment in turbulent locations. Make sure that the system is "locked" (i.e. fan speeds, dampers, terminals, etc. are not actively controlling) when the FAW is run.

⚠ *The reference units of measure must be equal to the adjustment units of measure.*

FAW (located in the TOOLS menu)

Use ↑↓ buttons to modify, {ENT} to accept and move to next prompt, {ESC} to move to previous prompt.

If the LOCK is enabled, pressing enter will indicate "CONFIG LOCKED" and this tool will not be available.

Navigate entire menu to step 11 to save settings. Press {ESC} at any time to exit without saving changes.

STEP	PROMPT	RESPONSE	DESCRIPTION	SKIP TO
1	LOCATION?	1↓	Location 1 of 2.	
		2↑	Location 2 of 2.	
			Note: This prompt will only be visible on 2 location devices. Single location devices start at step #3.	
2	# OF FLOWS?	1↓	One flow rate. Only the gain coefficient is calculated.	
		2↑	Two flow rates. The gain and offset coeficients are calculated.	
3	SET FLOW 1		Set FLOW 1. Press ENT to start sample.	
4	REF XXX?	0↑	XXX = FPM [m/s] or CFM [LPS]. Enter reference airflow in appropriate units.	
5	SMPLS=XXX	###%	XXX = number of samples. ### = % complete. Goes to next step at 100%.	
6	Steps 7 to 9 are only visible if # OF FLOWS is set to 2.			
7	SET FLOW 2		Set FLOW 2. Press ENT to start sample.	
8	REF XXX?	0↑	XXX = FPM [m/s] or CFM [LPS]. Enter reference airflow in appropriate units.	
9	SMPLS=XXX	###%	Displays number of integration samples and % complete. Goes to next step at 100%.	
10	G:#.###	O:#####	Displays calculated gain and offset coefficients. ENT to move to next step.	
11	SAVE?	YES↓	Save coeficients, enable adjustments and return to normal operation.	
		NO↑	Do not save coefficents and return to normal operation.	

EBTRON, Inc • 1663 Hwy 701 S., Loris, SC 29569 • Toll Free: 800-2EBTRON (232-8766) • Fax: 843-756-1838 • EBTRON.com

4.5. TEST OUTPUT TOOL [TEST OUT]

The test output tool provides a user defined, fixed output signal between 0 and 100% of the full-scale.

TEST OUT (located in the TOOLS menu)

Use ↑↓ buttons to modify, {ENT} to accept and move to next prompt, {ESC} to move to previous prompt.

If the LOCK is enabled, pressing enter will indicate "CONFIG LOCKED" and this tool will not be available.

Navigate entire menu to step 3 to save settings. Press {ESC} at any time to exit and return to normal operation.

STEP	PROMPT	RESPONSE	DESCRIPTION	SKIP TO
1	OUTPUT?	AO1↓	Analog output 1 (AO1).	
		AO2↑↓	Analog output 2 (AO2).	
		AO3↑	Analog output 3 (AO3). [Visible with GTx116e with /H relative humidity sensor installed)	
2	OUTPUT %?	50↑↓	Sets the percent of full-scale output, 0 to 100%.	
3	EXIT?	YES↓	Return to normal operation.	
		NO↑	Return to step 1.	1

4.6. TEST RELAY TOOL [TEST RELAY]

The test relay tool is only available with EF-x2000 transmitters. The test relay tool enables or disables the relay.

- Normally open relays will close when enabled and open when disabled.
- Normally closed relays will open when enabled and close when disabled.

TEST RELAY (located in the TOOLS menu)

Use ↑↓ buttons to modify, {ENT} to accept and move to next prompt, {ESC} to move to previous prompt.

If the LOCK is enabled, pressing enter will indicate "CONFIG LOCKED" and this tool will not be available.

Navigate entire menu to step 2 to save settings. Press {ESC} at any time to exit and return to normal operation.

STEP	PROMPT	RESPONSE	DESCRIPTION	SKIP TO
1	STATUS?	ENABLE↓	Enable relay 1 (R1).	
		DISABLE↑	Disable relay 1 (R1).	
2	EXIT?	YES↓	Return to normal operation.	
		NO↑	Return to step 1.	1

4.7. LOCK TOOL [LOCK]

The lock tool locks transmitter settings and tools. Settings can be viewed but not modified. There are three lock security levels – low, medium and high.

SECURITY = LOW. Low security. The last four digits of the serial number of the transmitter PCB motherboard is used as the lock code. The serial number is located on a label on the PCB.

SECURITY = MED. Medium security. A four-digit code is entered by the user. If the code is lost, a unique "back door" code can be provided by EBTRON customer service to unlock the device.

SECURITY = HIGH. High security. A four-digit code is entered by the user. If the code is lost, the transmitter must be returned to EBTRON to be unlocked.

LOCK Tool (located in the TOOLS menu)

EBTRON, Inc • 1663 Hwy 701 S., Loris, SC 29569 • Toll Free: 800-2EBTRON (232-8766) • Fax: 843-756-1838 • EBTRON.com

Use ↑↓ buttons to modify, {ENT} to accept and move to next prompt, {ESC} to move to previous prompt.

The LOCK menu item is only visible when the device is UNLOCKED.

Navigate entire menu to step 4 to lock device settings and tools. Press {ESC} twice at any time to exit without locking the device.

STEP	PROMPT	RESPONSE	DESCRIPTION	SKIP TO
1	LOCK?	YES↓	Lock transmitter parameters and tools.	
		NO↑	Do not lock device. Return to normal operation.	
2	SECURITY?	LOW↓	Lock device using PCB serial number as lock/unlock code and return to normal operation.	
		MED↑↓	User defined lock/unlock code with EBTRON "back door" emergency code override.	
		HIGH↑	User defined lock/unlock code. Cannot be unlocked without code or return to factory.	
3	CODE?	0000↑	Enter lock code.	
4	CONFIRM?	0000↑	Reenter lock code. Lock device and return to normal operation. *Note: If an invalid code is entered, the display will indicate "INVALID CODE" for 5 seconds and return to step 3.*	

4.8. UNLOCK TOOL [UNLOCK]

The unlock tool unlocks transmitter settings and tools. Settings can be viewed and modified.

UNLOCK Tool (located in the TOOLS menu)

Use ↑↓ buttons to modify, {ENT} to accept and move to next prompt, {ESC} to move to previous prompt.

The UNLOCK menu item is only visible when the device is LOCKED.

Navigate entire menu to step 2 to unlock settings and tools. Press {ESC} twice at any time to exit without unlocking the device.

STEP	PROMPT	RESPONSE	DESCRIPTION	SKIP TO
1	UNLOCK?	YES↓	Lock transmitter parameters and tools.	
		NO↑	Do not lock device. Return to normal operation.	
2	CODE?	0000↑	Unlock the device and return to normal operation. *Note: If an invalid code is entered, the display will indicate "INVALID CODE" for 5 seconds and return to step 2.*	

EBTRON, Inc • 1663 Hwy 701 S., Loris, SC 29569 • Toll Free: 800-2EBTRON (232-8766) • Fax: 843-756-1838 • EBTRON.com

5. SECTION OVERVIEW

This section discusses the built-in diagnostics features of the transmitter.

All Advantage IV Gold Series transmitters are provided with a Bluetooth® Low Energy interface that allows transmitter diagnostic information to be quickly downloaded then e-mailed and/or saved using your iOS or Android phone or tablet.

5.1. DIAGNOSTICS MENU ACCESS AND NAVIGATION

The SETTINGS menu contains the following submenu categories:

- DEV INFO
- DIAGNOSTICS
- TRBL CODES

The following symbols are used to describe shortcut paths for menu and submenu navigation:

- > press the enter ENT pushbutton once
- < press the escape ESC pushbutton once
- ↓ press the down arrow pushbutton until the subsequent menu item or parameter appears
- ↑ press the up arrow pushbutton until the subsequent menu item or parameter appears

Simultaneously press the ↑ and ↓ pushbuttons during normal operation to enter the main menu. The transmitter continues to operate normally in the background.

The SETTINGS menu is displayed. Press ↓ pushbutton until the DIAGNOSTICS menu is displayed. Press the ENT pushbutton to select the top of the DIAGNOSTICS submenu category.

The DIAGNOSTICS menu block diagram is shown on the next page.

EBTRON, Inc • 1663 Hwy 701 S., Loris, SC 29569 • Toll Free: 800-2EBTRON (232-8766) • Fax: 843-756-1838 • EBTRON.com

FIGURE 5-1 DIAGNOSTICS MENU BLOCK DIAGRAM

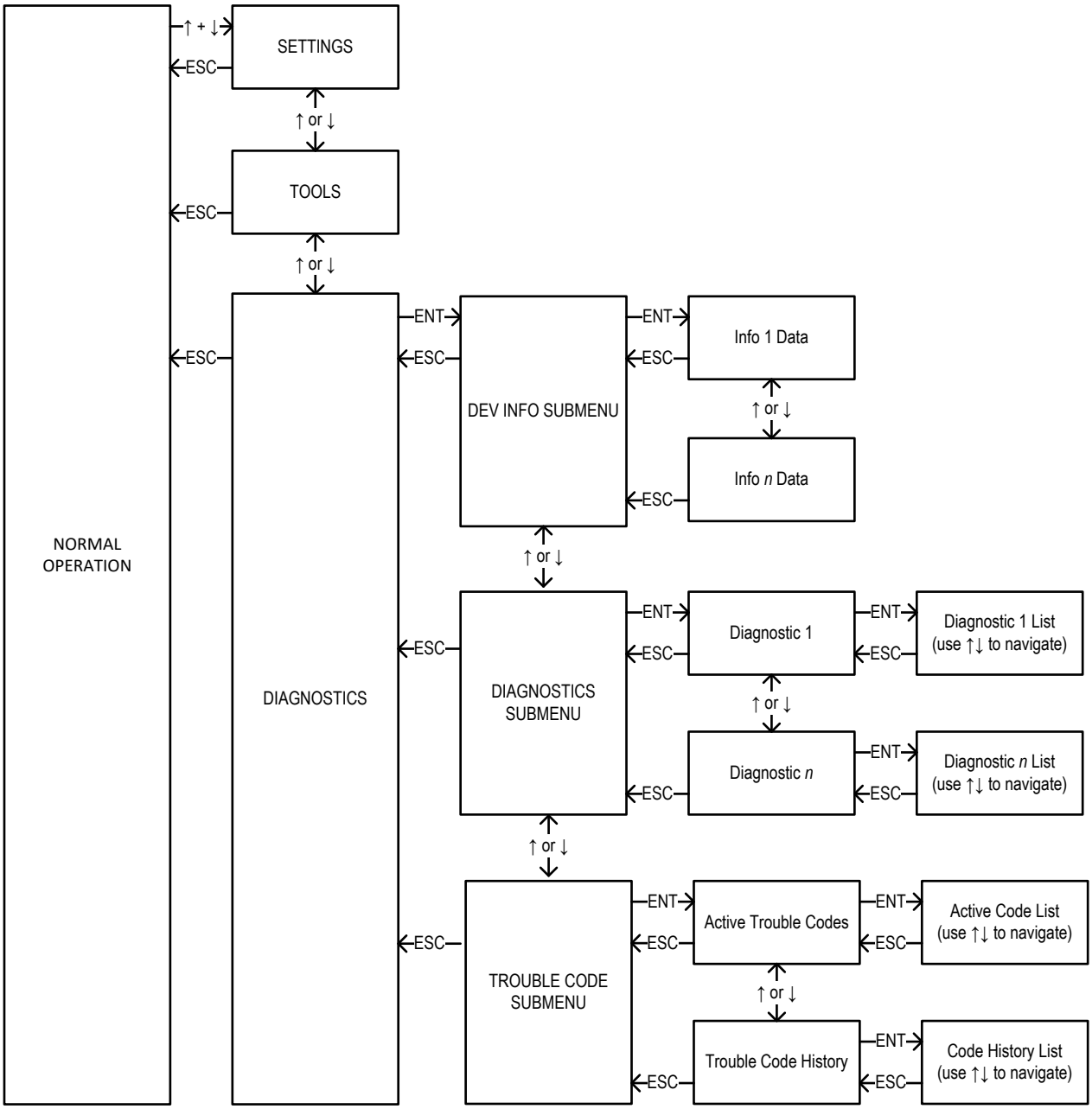

EBTRON, Inc • 1663 Hwy 701 S., Loris, SC 29569 • Toll Free: 800-2EBTRON (232-8766) • Fax: 843-756-1838 • EBTRON.com

TABLE 5-1 DIAGNOSTIC INFORMATION AND DATA

	Display *{Description}*	Sublevel List	Units	Product Line	Probe Type	Special Criteria
DEV INFO	DEV SN *{Device S.N}*	N/A		All	All	
	PCB SN *{ Main PCB S.N.}*	N/A		All	All	
	CON SN *{Connector Card S.N.}*			A4	-F/An	Transmitters with 8-connector receptacle card.
	PCB FW *{Main PCB Firmware}*	N/A		All	All	
	CON FW *{Connector Card Firmware}*	N/A		A4	-F/An	Transmitters with 8-connector receptacle card.
	OUT FW *{Output Card Firmware}*	N/A		A4	All	Transmitters with supported output cards.
	BLE FW *{BLE Radio Firmware}*	N/A		A4	All	GTx116e and GTx108e transmitters with built in BT only.
	Pb=*{sensor value}*	N/A	inHg [Pa]	A4	All	GTx116e and GTx108e transmitters with onboard pressure sensor.
LOC DIAG	PROBE SN	P1=*{S.N}* [list all found]		All	All	Single location transmitter
	AVG VELOCITY	VEL=*{avg velocity}*	FPM [m/s]	All	All	Single location transmitter
	FAN VELOCITY	1=*{fan velocity}*	FPM [m/s]	A4	-F/An	Single location transmitter
	FAN FLOW	1=*{fan flow}*	CFM [L/s]	A4	-F/An	Single location transmitter
	AVG TEMP w/Offset	TEMP=*{avg temp}*	°F [°C]	All	All	Single location transmitter
	AVG TEMP OFFSET ADJUSTMENT	TEMP OFF={offset}	°F [°C]	All	All	Single location transmitter
	AVG RH w/Offset	RH={avg RH}	%RH	All	All	Single location transmitter
	AVG RH OFFSET ADJUSTMENT	RH OFF={offset}	%RH	All	All	Single location transmitter
	NODE VELOCITY	S1={velocity} [list all found]	FPM [m/s]	All	All	Single location transmitter
	NODE TEMP	T1={temp} [list all found]	°F [°C]	All	All	Single location transmitter
	RH SENS	RH1={RH} [list all found]		A4 GTx116e	/H option	Single location transmitter
	HS VOLTS	HS1={heat vdc} [list all found]	volts	All	All	Single location transmitter
	TS VOLTS	TS1={temp vdc} [list all found]	volts	All	All	Single location transmitter
LOC1 DIAG	PROBE SN	P1={S.N} [list all found]		All	All	Dual location 1 of 2
	AVG VELOCITY	VEL=*{avg velocity}*	FPM [m/s]	All	All	Dual location 1 of 2
	AVG TEMP	TEMP=*{avg temp}*	°F [°C]	All	All	Dual location 1 of 2
	NODE VELOCITY	S1={velocity} [list all found]	FPM [m/s]	All	All	Dual location 1 of 2
	NODE TEMP	T1={temp} [list all found]	°F [°C]	All	All	Dual location 1 of 2
	HS VOLTS	HS1={heat vdc} [list all found]	volts	All	All	Dual location 1 of 2
	TS VOLTS	TS1={temp vdc} [list all found]	volts	All	All	Dual location 1 of 2
LOC2 DIAG	PROBE SN	P1={S.N} [list all found]		All	All	Dual location 2 of 2
	AVG VELOCITY	VEL=*{avg velocity}*	FPM [m/s]	All	All	Dual location 2 of 2
	AVG TEMP	TEMP=*{avg temp}*	°F [°C]	All	All	Dual location 2 of 2
	NODE VELOCITY	S1={velocity} [list all found]	FPM [m/s]	All	All	Dual location 2 of 2
	NODE TEMP	T1={temp} [list all found]	°F [°C]	All	All	Dual location 2 of 2
	HS VOLTS	HS1={heat vdc} [list all found]	volts	All	All	Dual location 2 of 2
	TS VOLTS	TS1={temp vdc} [list all found]	volts	All	All	Dual location 2 of 2
TRBL CODES	ACTIVE TRBL	00 NO TRBL		All	All	
		# {error} [list all]		All	All	
	HISTORY TRBL	00 NO TRBL		All	All	
		# {error} [list all]		All	All	

FIGURE 5-2 SINGLE LINE DISPLAY MENU STRUCTURE

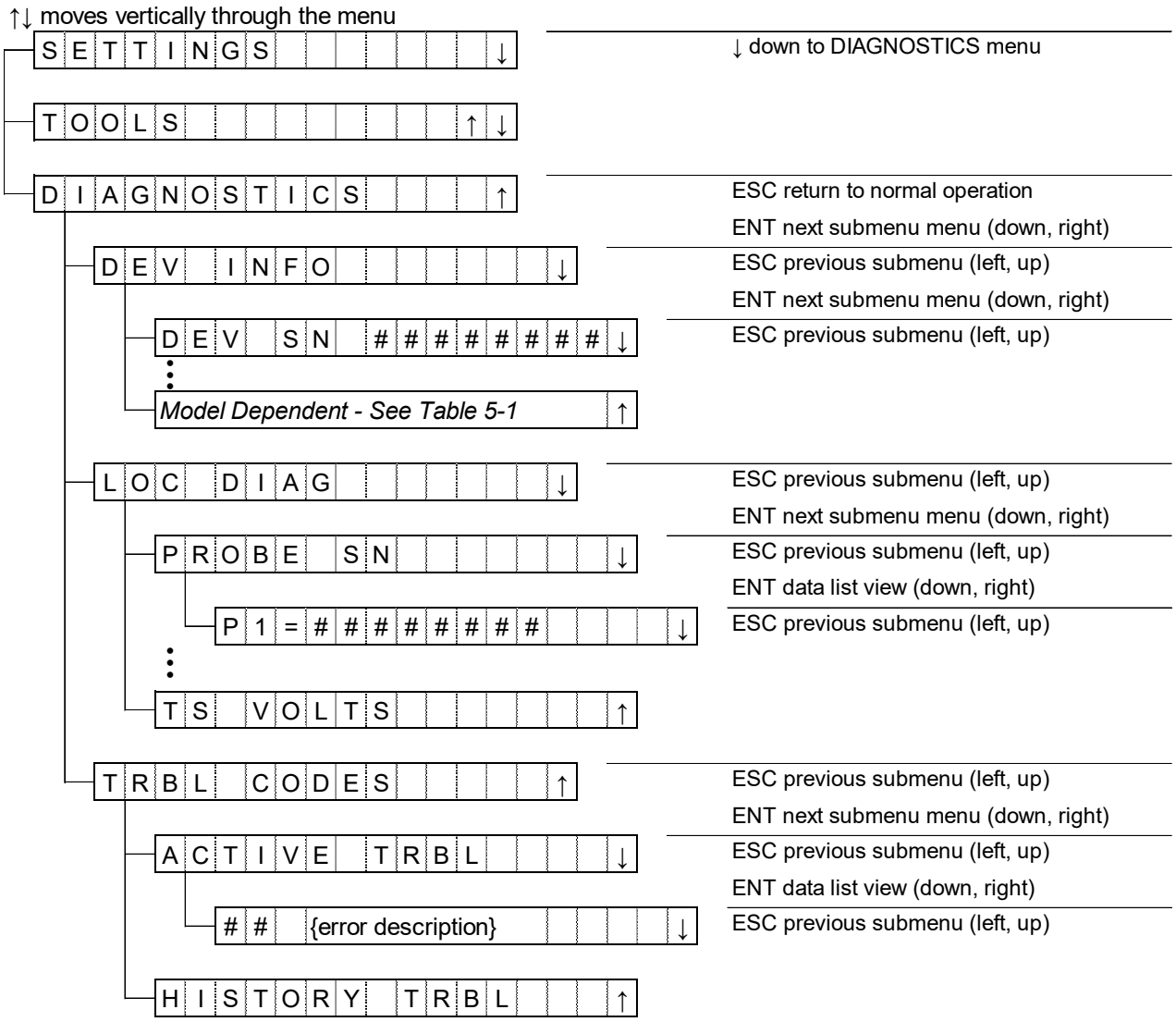

EBTRON, Inc • 1663 Hwy 701 S., Loris, SC 29569 • Toll Free: 800-2EBTRON (232-8766) • Fax: 843-756-1838 • EBTRON.com

FIGURE 5-3 DUAL LINE DISPLAY MENU STRUCTURE

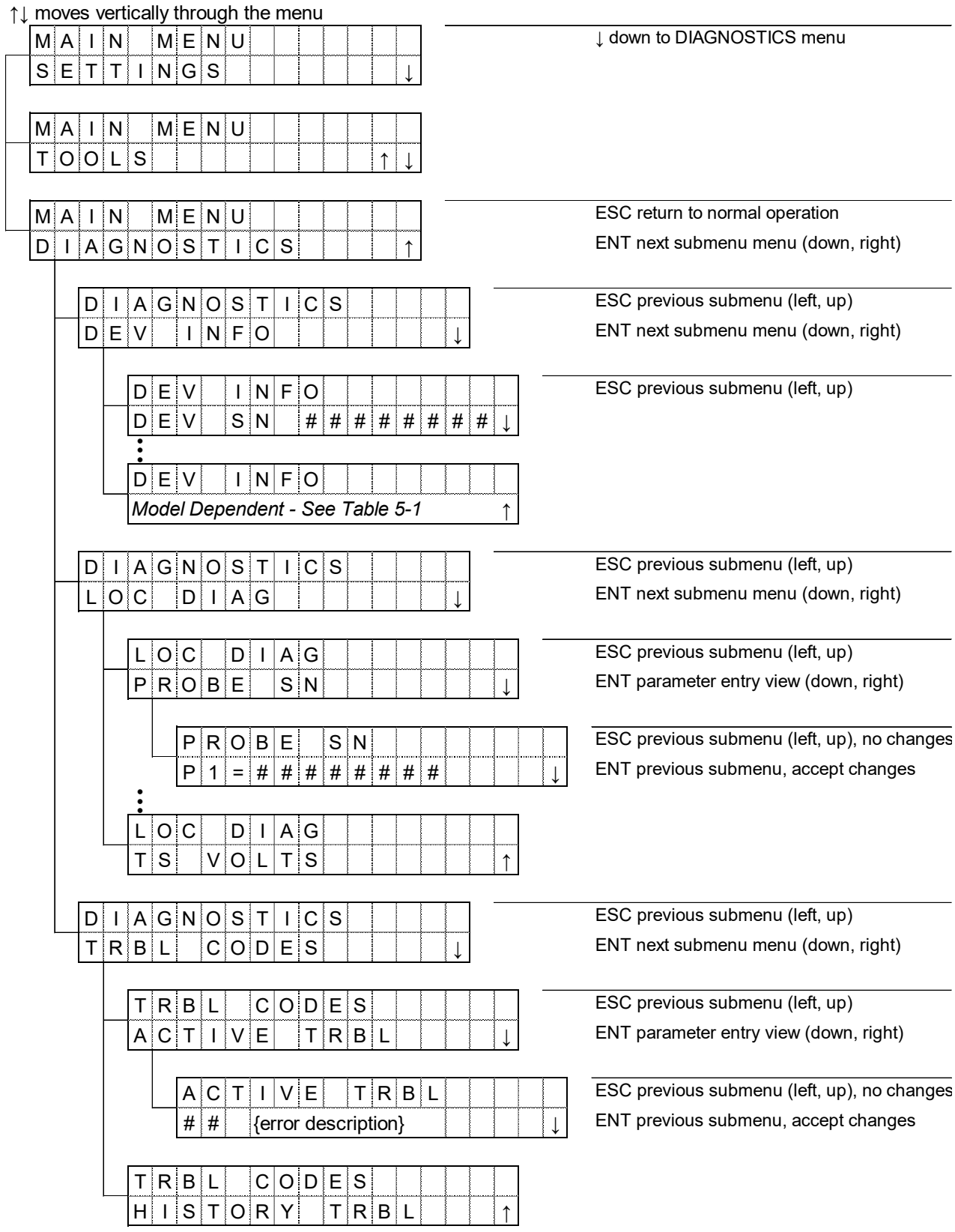

EBTRON, Inc • 1663 Hwy 701 S., Loris, SC 29569 • Toll Free: 800-2EBTRON (232-8766) • Fax: 843-756-1838 • EBTRON.com

5.2. DEV INFO (DEVICE INFORMATION)

The DEV DIAG submenu contains the following information:

- DEV SN (Device Serial Number)
- PCB SN (Main PCB Serial Number)
- CON SN (Connector Card Serial Number)
- PCB FW (Main Circuit Board Firmware Version)
- CON FW (Connector Card Firmware Version)
- OUT FW (Output/Network Card Firmware Version)
- BLE FW (Bluetooth Low Energy Radio Firmware Version)
- Pb (On-board Barometric Pressure Sensor Reading)

5.2.1. Device Serial Number [DEV SN]

The serial number of the transmitter system.

[Menu path: SETTINGS ↓ DIAGNOSTICS > DEV INFO > DEV SN]

Applies to: All transmitter models.

ⓘ *The device serial number is identified by a label located on the transmitter enclosure.*

5.2.2. Main PCB Serial Number [PCB SN]

The serial number of the main circuit board.

[Menu path: SETTINGS ↓ DIAGNOSTICS > DEV INFO >↓ PCB SN]

Applies to: All transmitter models.

5.2.3. Connector Card Serial Number [CON SN]

The serial number of the 8-connector receptacle card.

[Menu path: SETTINGS ↓ DIAGNOSTICS > DEV INFO >↓ CON SN]

Applies to: GTx108-F/An models only.

5.2.4. Main PCB Firmware Version [PCB FW]

The firmware version of the main transmitter circuit board (i.e. the transmitter operating system)

[Menu path: SETTINGS ↓ DIAGNOSTICS > DEV INFO >↓ PCB FW]

Applies to: All transmitter models.

5.2.5. Connector Card Firmware Version [CON FW]

The firmware version of the 8-connector receptacle card.

[Menu path: SETTINGS ↓ DIAGNOSTICS > DEV INFO >↓ CON FW]

Applies to: GTx108-F/An models only.

EBTRON, Inc • 1663 Hwy 701 S., Loris, SC 29569 • Toll Free: 800-2EBTRON (232-8766) • Fax: 843-756-1838 • EBTRON.com

5.2.6. Output/Network Card Firmware Version [OUT FW]

The firmware version of an optional output/network card.

[Menu path: SETTINGS ↓ DIAGNOSTICS > DEV INFO >↓ OUT FW]

Applies to: All Gold Series transmitters with an optional output/network card installed.

5.2.7. Bluetooth Low Energy Radio Firmware Version [BLE FW]

The firmware version of the BLE transceiver.

[Menu path: SETTINGS ↓ DIAGNOSTICS > DEV INFO >↓ BLE FW]

Applies to: GTx116e and GTx108e transmitters with an integral BLE transceiver on the main PCB.

5.2.8. On-board Barometric Pressure Sensor Reading [Pb]

The current value reading of the onboard barometric pressure sensor in inHg [Pa].

[Menu path: SETTINGS ↓ DIAGNOSTICS > DEV INFO >↓ Pb]

Applies to: GTx116e and GTx108e transmitters only.

5.3. LOC DIAG (LOCATION DIAGNOSTICS)

Provided real-time diagnostic data for the measurement location.

ⓘ *If the transmitter is configured for two locations, submenu tabs for LOC1 DIAG and LOC2 DIAG will be displayed in lieu of LOC DIAG and the information will be replicated for each. See Table 5-1 for more information.*

- PROBE SN (Probe Serial Numbers)
- AVG VELOCITY (Average Velocity of the Sensor Nodes)
- FAN VELOCITY (Average Fan Velocity)
- FAN FLOW (Fan Volumetric Airflow Rate)
- AVG TEMP (Average Temperature of the Sensor Nodes)
- TEMP OFF (Average Temperature Offset Adjustment)
- AVG RH (Average Relative Humidity of the RH Sensors)
- RH OFF (Average Relative Humidity Offset Adjustment)
- NODE VELOCITY (Velocity of each Sensor Node)
- NODE TEMP (Temperature of each Sensor Node)
- RH SENS (Relative Humidity of each RH Sensor)
- HS VOLTS (Self-heated Thermistor Voltage of each Sensor Node)
- TS VOLTS (Zero-power Thermistor Voltage of each Sensor Node)

5.3.1. Probe Serial Numbers [PROBE SN]

The serial number of each probe connected to the transmitter.

[Menu path: SETTINGS ↓ DIAGNOSTICS > DEV INFO ↓ LOC DIAG > PROBE SN > {probe list 1 to n}]

Applies to: All models.

Each probe has a unique serial number that is printed on a label affixed to the probe. The serial number is also stored in a serial memory device located in the cable plug. The serial number identifies where the probe should be located, the probe length and the number of sensors in the probe and is useful information during

EBTRON, Inc • 1663 Hwy 701 S., Loris, SC 29569 • Toll Free: 800-2EBTRON (232-8766) • Fax: 843-756-1838 • EBTRON.com

field diagnostics. Probe numbers (P1 to Py) are dynamically assigned by the transmitter after initial power up, left to right, based on the connector receptacle used. Use the ↑ ↓ pushbuttons to navigate through the list of probes that the transmitter to confirm that all probes for the location are connected. The probe number, serial number and letter "T" is displayed for each probe connected.

ⓘ *If a probe is removed after initial power-up the letter "F" will follow the serial number.*

5.3.2. Average Velocity of the Sensor Nodes [AVG VELOCITY]

The running average velocity of all properly functioning sensor nodes in FPM [m/s]. The running average integration is set to the LCD integration parameter [LCD INTG].

[Menu path: SETTINGS ↓ DIAGNOSTICS > DEV INFO ↓ LOC DIAG >↓ AVG VELOCITY]

Applies to: All models.

5.3.3. Average Fan Velocity (FAN VELOCITY)

The running average velocity of each individual fan in a fan array in FPM [m/s]. The running average integration is set to the LCD integration parameter [LCD INTG].

[Menu path: SETTINGS ↓ DIAGNOSTICS > DEV INFO ↓ LOC DIAG >↓ FAN VELOCITY > {fan list 1 to n}]

Applies to: GTx108-F/An models only.

5.3.4. Fan Volumetric Airflow Rate (FAN FLOW)

The running average volumetric airflow rate of each individual fan in a fan array in CFM [L/s]. The running average integration is set to the LCD integration parameter [LCD INTG].

[Menu path: SETTINGS ↓ DIAGNOSTICS > DEV INFO ↓ LOC DIAG >↓ FAN VELOCITY > {fan list 1 to n}]

Applies to: GTx108-F/An models only.

5.3.5. Average Temperature of the Sensor Nodes [AVG TEMP]

The running average temperature of all properly functioning sensor nodes in °F [°C]. The running average integration is set to 20 and cannot be modified. The average temperature including any user entered offset.

[Menu path: SETTINGS ↓ DIAGNOSTICS > DEV INFO ↓ LOC DIAG >↓ AVG TEMP]

Applies to: All models.

5.3.6. Average Temperature Offset Adjustment [TEMP OFF]

A user entered temperature offset in °F [°C].

[Menu path: SETTINGS ↓ DIAGNOSTICS > DEV INFO ↓ LOC DIAG >↓ TEMP OFF]

Applies to: All models.

Use the ↑ and ↓ pushbuttons to enter a user defined offset. Press the ENT pushbutton to accept the offset or the ESC pushbutton to keep the previous value.

ⓘ *The temperature output of the EBTRON device is velocity-weighted and more accurate than the simple arithmetic average obtained by a field temperature measurement or traverse. A field temperature measurement will not match the velocity-weighted output shown on the display. The arithmetic average of the sensor nodes is indicated by AVG TEMP in 5.3.5. If an adjustment is made to a field measurement, it should be to AVG TEMP and not the displayed or output temperature of the device.*

EBTRON, Inc • 1663 Hwy 701 S., Loris, SC 29569 • Toll Free: 800-2EBTRON (232-8766) • Fax: 843-756-1838 • EBTRON.com

⚠ *Making an adjustment to the temperature overrides EBTRON's NIST traceable temperature calibration.*

5.3.7. Average Relative Humidity of the RH Sensors [AVG RH]

The average, non-integrated relative humidity of all properly functioning humidity sensors as %RH.

[Menu path: SETTINGS ↓ DIAGNOSTICS > DEV INFO ↓ LOC DIAG >↓ AVG RH]

Applies to: GTx116e-P/H models only (i.e. models with the /H humidity sensor option).

5.3.8. Average Relative Humidity Offset Adjustment [RH OFF]

A user entered relative humidity offset in %RH.

[Menu path: SETTINGS ↓ DIAGNOSTICS > DEV INFO ↓ LOC DIAG >↓ RH OFF]

Applies to: All models.

Use the ↑ and ↓ pushbuttons to enter a user defined offset. Press the ENT pushbutton to accept the offset or the ESC pushbutton to keep the previous value.

ⓘ *The relative humidity output of the EBTRON device is velocity-weighted and more accurate than the simple arithmetic average obtained by a field relative humidity measurement or traverse. A field temperature measurement will not match the velocity-weighted output shown on the display. The arithmetic average of the relative humidity sensor(s) is indicated by AVG RH in 5.3.7. If an adjustment is made to a field measurement, it should be to AVG RH and not the displayed or output relative humidity of the device.*

⚠ *Making an adjustment to either the temperature or the RH sensor modifies the enthalpy and dewpoint calculations.*

5.3.9. Velocity of each Sensor Node [NODE VELOCITY]

The running average velocity of each sensor node in FPM [m/s]. The running average integration is set to 30 and cannot be modified.

[Menu path: SETTINGS ↓ DIAGNOSTICS > DEV INFO ↓ LOC DIAG >↓ NODE VELOCITY> {sensor node list 1 to n}]

Applies to: All models.

Use the ↑ ↓ pushbuttons to navigate through the sensor nodes.

ⓘ *It is normal for velocity of an individual sensor node to fluctuate. The greater the fluctuation, the greater the turbulence at the measurement location.*

5.3.10. Temperature of each Sensor Node [NODE TEMP]

The non-integrated temperature of each sensor node in °F [°C] without any offset adjustment.

[Menu path: SETTINGS ↓ DIAGNOSTICS > DEV INFO ↓ LOC DIAG >↓ NODE TEMP> {sensor node list 1 to n}]

Applies to: All models.

Use the ↑ ↓ pushbuttons to navigate through the sensor nodes.

EBTRON, Inc • 1663 Hwy 701 S., Loris, SC 29569 • Toll Free: 800-2EBTRON (232-8766) • Fax: 843-756-1838 • EBTRON.com

5.3.11. Relative Humidity of each RH Sensor [RH SENS]

The average, non-integrated relative humidity of each humidity sensors as %RH without any offset adjustment.

[Menu path: SETTINGS ↓ DIAGNOSTICS > DEV INFO ↓ LOC DIAG >↓ RH SENS]

Applies to: GTx116e-P/H models only (i.e. models with the /H humidity sensor option).

ⓘ *This diagnostic is only visible when more than one humidity sensor has been provided for the measurement location.*

Use the ↑ ↓ pushbuttons to navigate through the individual humidity sensors.

5.3.12. Self-heated Thermistor Voltage of each Sensor Node [HS VOLTS]

The voltage of the self-heated thermistor as measured by the analog to digital (A/D) converter of the transmitter.

[Menu path: SETTINGS ↓ DIAGNOSTICS > DEV INFO ↓ LOC DIAG >↓ HS VOLTS]

Applies to: All models.

5.3.13. Zero-power Thermistor Voltage of each Sensor Node [TS VOLTS]

The voltage of the zero-power (temperature measuring) thermistor as measured by the analog to digital (A/D) converter of the transmitter.

[Menu path: SETTINGS ↓ DIAGNOSTICS > DEV INFO ↓ LOC DIAG >↓ TS VOLTS]

Applies to: All models.

5.4. TRBL CODES (TROUBLE CODES)

Trouble codes facilitate diagnosing problems with your EBTRON airflow measurement system. Many trouble codes are benign and do not require a remedy for system operation. Other codes require attention.

Both active and historic trouble codes are available. Historic codes are useful to discover intermittent problems and/or failures. Active trouble codes are displayed on the LCD unless the LCD TRBL parameter was set to OFF (Section 3). Active trouble codes also activate a LED flash sequence of 2 seconds on and 2 second off on the activity LED on the main circuit board (Section 6).

Table 5-2 contains a list of the trouble code numbers (Code) and corresponding Error Message by transmitter model.

EBTRON, Inc • 1663 Hwy 701 S., Loris, SC 29569 • Toll Free: 800-2EBTRON (232-8766) • Fax: 843-756-1838 • EBTRON.com

TABLE 5-2 TROUBLE CODES

Code	Error Message	GTx116e-P/H	GTx116e-P	GTx116-P	GTx208e-P	HTx104-P	HTx202-P	HTx104-T	EF-x2000-T	EF-x2000-U	GTx108-F/An	GTx108-F	GTx108e-F/An	GTx108e-F	GTx204e-F	HTx104-F	HTx202-F	GTx116-B	HTx104-B	EF-x2000-B
1	NO PROBES	•	•	•	•	•	•	•	•	•	•	•	•	•	•	•	•	•	•	•
2	WRONG SENS	•	•	•	•	•	•	•	•	•	•	•	•	•	•	•	•	•	•	•
3	P1 MISSING	•	•	•	•	•	•	•	•	•	•	•	•	•	•	•	•	•	•	•
4	P2 MISSING	•	•	•	•	•	•			•	•	•	•	•	•	•	•	•		
5	P3 MISSING	•	•	•	•						•	•	•	•	•	•	•	•		
6	P4 MISSING	•	•	•	•						•	•	•	•	•	•	•	•		
7	P5 MISSING										•	•	•	•	•					
8	P6 MISSING										•	•	•	•	•					
9	P7 MISSING										•	•	•	•	•					
10	P8 MISSING										•	•	•	•	•					
11	P1 MEM ERROR	•	•	•	•	•	•	•	•	•	•	•	•	•	•	•	•	•	•	•
12	P2 MEM ERROR	•	•	•	•	•	•			•	•	•	•	•	•	•	•	•		
13	P3 MEM ERROR	•	•	•	•						•	•	•	•	•	•	•	•		
14	P4 MEM ERROR	•	•	•	•						•	•	•	•	•	•	•	•		
15	P5 MEM ERROR										•	•	•	•	•					
16	P6 MEM ERROR										•	•	•	•	•					
17	P7 MEM ERROR										•	•	•	•	•					
18	P8 MEM ERROR										•	•	•	•	•					
19	SENSOR 1	•	•	•	•	•	•	•	•	•	•	•	•	•	•	•	•	•	•	•
20	SENSOR 2	•	•	•	•	•	•	•	•	•	•	•	•	•	•	•	•	•	•	•
21	SENSOR 3	•	•	•	•	•	•				•	•	•	•	•	•	•	•		
22	SENSOR 4	•	•	•	•	•	•				•	•	•	•	•	•	•	•		
23	SENSOR 5	•	•	•	•						•	•	•	•	•			•		
24	SENSOR 6	•	•	•	•						•	•	•	•	•			•		
25	SENSOR 7	•	•	•	•						•	•	•	•	•			•		
26	SENSOR 8	•	•	•	•						•	•	•	•	•			•		
27	SENSOR 9	•	•	•	•															
28	SENSOR 10	•	•	•	•															
29	SENSOR 11	•	•	•	•															
30	SENSOR 12	•	•	•	•															
31	SENSOR 13	•	•	•	•															
32	SENSOR 14	•	•	•	•															
33	SENSOR 15	•	•	•	•															
34	SENSOR 16	•	•	•	•															
35	LOW TEMP	•	•	•	•	•	•	•	•	•	•	•	•	•	•	•	•	•	•	•
36	HIGH TEMP	•	•	•	•	•	•	•	•	•	•	•	•	•	•	•	•	•	•	•
40	RH1 MISSING	•																		
41	RH2 MISSING	•																		
42	RH3 MISSING	•																		
43	RH4 MISSING	•																		

EBTRON, Inc • 1663 Hwy 701 S., Loris, SC 29569 • Toll Free: 800-2EBTRON (232-8766) • Fax: 843-756-1838 • EBTRON.com

TABLE 5-2 TROUBLE CODES (Continued)

Code	Error Message	GTx116e-P/H	GTx116e-P	GTx116-P	GTx208e-P	HTx104-P	HTx202-P	HTx104-T	EF-x2000-T	EF-x2000-U	GTx108-F/An	GTx108-F	GTx108e-F/An	GTx108e-F	GTx204e-F	HTx104-F	HTx202-F	GTx116-B	HTx104-B	EF-x2000-B
50	Pb SENS ERROR	•	•		•								•	•	•					
60	NUM PROBES				•		•			•					•		•			
61	FAN COUNT										•		•							
70	SYSTEM ERROR	•	•	•	•	•	•	•	•	•	•	•	•	•	•	•	•	•	•	•
71	OUT CARD	•	•	•	•						•	•	•	•	•			•		
72	CON CARD										•	•	•	•	•					
73	BLE COM ERROR	•	•		•								•	•	•					
74	AOUT ERR	•	•		•								•	•	•					
75	CON BUS	•	•		•								•	•	•					

Table 5-3 provides a description of each trouble code message. If a trouble code and message is displayed on the LCD, refer to Section 6 – Troubleshooting or contact EBTRON customer service at 1-800-232-8766.

TABLE 5-3 ERROR MESSAGE DESCRIPTION

Error Message	Error Description
NO PROBES	No probes discovered by transmitter.
WRONG SENS	Mismatched sensor probe types on a single transmiter.
Px MISSING	Registered probe missing.
Px MEM ERROR	Serial memory error in probe.
SENSOR x	Sensor node error.
LOW TEMP	Airstream temperature below product's specified minimum (-20°F [-28.9°C])
HIGH TEMP	Airstream temperature above product's specified maximum (160°F [71.1°C])
RHx MISSING	Humidity sensor error.
Pb SENS ERR	Barometric pressure sensor error.
NUM PROBES	Missing probe at Location 2 (dual location EF units).
FAN COUNT	Fan count entry from FAN WIZ does not equal actual sensor probe count.
SYSTEM ERROR	Transmitter memory error.
OUT CARD	"e" transmitter connector card communication error.
CON CARD	-F/An connector card communication error.
BLE COMM ERR	BLE radio error.
AOUT ERR	"e" transmitter analog output error.
CON BUS	"e" transmitter probe serial memory communication error.

EBTRON, Inc • 1663 Hwy 701 S., Loris, SC 29569 • Toll Free: 800-2EBTRON (232-8766) • Fax: 843-756-1838 • EBTRON.com

6. SECTION OVERVIEW

Each EBTRON product is thoroughly tested prior to shipment. This section contains information on troubleshooting EBTRON Advantage IV and EB-Flow2 measuring devices.

If the product has been physically damaged, skip to Section 6.5. If trouble codes are displayed on the LCD, skip to Section 6.3. If the product is functioning properly and there is a discrepancy in the measurement, skip to Section 6.4.

6.1. INITIAL TROUBLESHOOTING

If the display is blank or no trouble codes are displayed, follow the initial troubleshooting procedure of Table 6-1. If trouble codes are displayed on the LCD, skip to 6.3.

TABLE 6-1 – INITIAL TROUBLESHOOTING

Procedure		Yes	No
1.	Is the activity LED illuminated or flashing?	2.	3.
ⓘ	*The activity LED is located bottom right of the ESC pushbutton of all A4 models and the upper left-hand corner of the printed circuit board of all EB-Flow2 models.*		
2.	Is the flash rate one second on and one second off?	3.	4.
3.	Continue to 6.2. TROUBLESHOOTING (NO TROUBLE CODES)		
4.	Is the flash rate two seconds on and two seconds off?	5.	CALL
5.	Are any trouble codes indicated on the LCD?	7.	6.
6.	The LCD trouble indication parameter, LCD TRBL, may be set to "OFF". Set the LCD TRBL parameter to "ON" (Section 3). Are any trouble codes indicated on the LCD?	7.	CALL
7.	Continue to 6.3. FDS TROUBLESHOOTING		

FDS stands for "Fault Detection System"

6.2. TROUBLESHOOTING (NO TROUBLE CODES)

The most common symptoms and solutions are covered in Table 6-2. If the symptom is not described in Table 6-2, contact customer service (Section 6.5).

Locate the symptom that best describes your issue. Follow the steps outlined and answer the question in the table until you reach “DONE” or “CALL”. In some cases, a yes/no response is not appropriate and instruction is given in the procedure.

6.3. FAULT DETECTION SYSTEM TROUBLESHOOTING

Advantage IV and *EBFlow-2* remote transmitters have a comprehensive fault detection system (FDS) that continuously runs in the background. If a fault is detected, a trouble code is generated and displayed on the LCD along with a short text description of the problem.

Active trouble codes can also be viewed from the DIAGNOSTICS MENU (Section 5) along with a trouble code history that is useful for finding intermittent faults. Identify the active trouble code on the LCD and use Table 6-3 or contact customer service (Section 6.5).

EBTRON, Inc • 1663 Hwy 701 S., Loris, SC 29569 • Toll Free: 800-2EBTRON (232-8766) • Fax: 843-756-1838 • EBTRON.com

TABLE 6-2 Non-FDS (Non-Fault Detection System) Troubleshooting

	Symptom	Transmitter Models	Procedure		Yes	No
BASIC OPERATION	The Activity LED flash rate is one second on and one second off and the display is blank.	All Transmitter Models	1.	Increase the LCD contrast to maximum (Section 2). Is the LCD blank?	CALL	DONE
			💡	*Set the contrast to the desired level if this corrects the problem.*		
	The Activity LED is not illuminated and the LCD is blank	A4 Transmitter Models GTx116, GTx108, HTx104 and HTx202 where x = {all output types}	1.	Is a 24 VAC power source properly connected to power terminal block with terminal screws secure and no shorts between wires (refer to the appropriate *Wiring Guide* for terminal connections)?	3.	2.
			⚠	*"Live" wiring to transmitter may damage the transmitter and void warranty*		
			2.	Make sure the 24 VAC power source is not energized. Properly connect the 24 VAC power source to the power terminal block. Energize the 24 VAC power source. Is the LCD blank?	3.	DONE
			3.	Is the power switch in the "ON" position?	5.	4.
			4.	Move the power switch to the "ON" position. Is the LCD blank?	5.	DONE
			5.	Measure the voltage across the power terminal block screws with a VOM configured to measure VAC. Is the voltage between 22.8 to 26.4 VAC?	7.	6.
			6.	Move the power switch to the "OFF" position. Correct input power problem so that the power supplied under load is between 22.8 and 26.4 VAC. Move the power switch to the "ON" position. Is the LCD blank?	7.	DONE
			7.	Move the power switch to the "OFF" position. Remove and inspect the power fuse. Is the fuse blown?	8.	CALL
			💡	*Check the fuse with a VOM set to ohms to verify the fuse is good (shorted) or blown (open).*		
			8.	Remove all signal wires and probes from transmitter. Replace the glass power fuse with a fast-acting fuse with the power rating indicated on printed circuit board. Move the power switch to the "ON" position. Is the LCD blank?	CALL	9.
			9.	Move the power switch to the "OFF" position. Connect all sensor probes. Move the power switch to the "ON" position. Is the LCD blank?	CALL	10.
			10.	Move the power switch to the "OFF" position. Connect all signal wires. Move the power switch to the "ON" position. Is the LCD blank?	11.	DONE
			ⓘ	*There was a problem that caused the fuse to blow that is no longer present.*		
			11.	There is a problem with the signal wiring or the host control system. Move the power switch to the "OFF" position. Disconnect the signal wiring, check for shorts in the signal wiring and/or other problems with the host control system. Is there a control wiring problem or other problem with the host control system?	12.	CALL
			12.	Correct the problem with the signal wiring or the host control system. Replace the blown power fuse. Connect all signal wires to the transmitter. Move the power switch to the "ON" position. Is the LCD blank?	CALL	DONE
		A4 Transmitter Model GTx116e, GTx208e, GTx108e, GTx204e	1.	Is a 24 VAC power source properly connected to power terminal block with terminal screws secure and no shorts between wires (refer to the appropriate *Wiring Guide* for terminal connections)?	3.	2.
			⚠	*"Live" wiring to transmitter may damage the transmitter and void warranty*		
			💡	*These models have solid state fuses. Allow at least one minute between power cycles to allow the solid state fuses to reset in the event they were in a fault condition.*		
			2.	Make sure the 24 VAC power source is not energized. Properly connect the 24 VAC power source to the power terminal block. Energize the 24 VAC power source. Is the LCD blank?	3.	DONE
			3.	Is the power switch in the "ON" position?	5.	4.
			4.	Move the power switch to the "ON" position. Is the LCD blank?	5.	DONE
			5.	Measure the voltage across the power terminal block screws with a VOM configured to measure VAC. Is the voltage between 22.8 to 26.4 VAC?	7.	6.
			6.	Move the power switch to the "OFF" position. Correct input power problem so that the power supplied under load is between 22.8 and 26.4 VAC. Move the power switch to the "ON" position. Is the LCD blank?	7.	DONE

TABLE 6-2 Non-FDS (Non-Fault Detection System) Troubleshooting

	Symptom	Transmitter Models		Procedure	Yes	No
BASIC OPERATION			7.	Move the power switch to the "OFF" position. Remove all signal wires and probes from transmitter. Move the power switch to the "ON" position. Is the LCD blank?	CALL	8.
			8.	Move the power switch to the "OFF" position. Connect all sensor probes. Move the power switch to the "ON" position. Is the LCD blank?	CALL	9.
			9.	Move the power switch to the "OFF" position. Connect all signal wires. Move the power switch to the "ON" position. Is the LCD blank?	10.	DONE
			ⓘ	*There was a problem that caused the solid state fuse to trip that is no longer present.*		
			10.	There is a problem with the signal wiring or the host control system. Move the power switch to the "OFF" position. Disconnect the signal wiring, check for shorts in the signal wiring and/or other problems with the host control system. Is there a control wiring problem or other problem with the host control system?	11.	CALL
			11.	Correct the problem with the signal wiring or the host control system. Connect all signal wires to the transmitter. Move the power switch to the "ON" position. Is the LCD blank?	CALL	DONE
		EB-Flow2 Transmitter Models EF-x2000	1.	Is a 24 VAC power source properly connected to power terminal block with terminal screws secure and no shorts between wires (refer to the appropriate *Wiring Guide* for terminal connections)?	3.	2.
			⚠	*"Live" wiring to transmitter may damage the transmitter and void warranty*		
			💡	*These models have solid state fuses. Allow at least one minute between power cycles to allow the solid state fuses to reset in the event they were in a fault condition.*		
			2.	Make sure the 24 VAC power source is not energized. Properly connect the 24 VAC power source to the power terminal block. Energize the 24 VAC power source. Is the LCD blank?	3.	DONE
			3.	Measure the voltage across the power terminal block screws with a VOM configured to measure VAC. Is the voltage between 22.8 to 26.4 VAC?	5.	4.
			4.	Make sure the 24 VAC power source is not energized. Correct input power problem so that the power supplied under load is between 22.8 and 26.4 VAC. Energize the 24 VAC power source. Is the LCD blank?	5.	DONE
			5.	Make sure the 24 VAC power source is not energized Remove all signal wires and probes from transmitter. Energize the 24 VAC power source. Is the LCD blank?	CALL	6.
			6.	Make sure the 24 VAC power source is not energized. Connect all sensor probes. Energize the 24 VAC power source. Is the LCD blank?	CALL	7.
			7.	Make sure the 24 VAC power source is not energized. Connect all signal wires. Energize the 24 VAC power source. Is the LCD blank?	8.	DONE
			ⓘ	*There was a problem that caused the solid state fuse to trip that is no longer present.*		
			8.	There is a problem with the signal wiring or the host control system. Make sure the 24 VAC power source is not energized. Disconnect the signal wiring, check for shorts in the signal wiring and/or other problems with the host control system. Is there a control wiring problem or problem with the host control system?	9.	CALL
			9.	Correct the problem with the signal wiring or the host control system. Connect all signal wires to the transmitter. Energize the 24 VAC power source. Is the LCD blank?	CALL	DONE
OUTPUT	The displayed reading (airflow, temperature or psychrometric value) is significantly fluctuating.	All Transmitter Models	1.	Is the signal of concern the airflow output signal?	2.	CALL
			2.	Is the measurment location in an outdoor air intake?	7.	3.
			3.	Does the measurement location meet or exceed EBTRON's published guidelines?	4.	5.
			4.	Increase the LCD integration parameter, LCD INTG. Is the displayed reading still fluctuating?	CALL	DONE
			💡	*Check for fan surge of other fan system instability problems.*		
			5.	Can you relocate the AMD to a better location?	CALL	6.

TABLE 6-2 Non-FDS (Non-Fault Detection System) Troubleshooting

	Symptom	Transmitter Models	Procedure		Yes	No
OUTPUT			6.	Increase the LCD integration parameter, LCD INTG. Is the displayed reading still fluctuating?	CALL	DONE
			7.	Is the AMD downstream of the outdoor air intake damper?	8.	9.
			8.	Relocate the AMD upstream of the outdoor air intake damper. Call EBTRON for assistance.		
			9.	Is the air velocity less than 150 FPM [0.75 m/s]?	10.	CALL
			10.	Transient wind gusts can create false readings on low velocity outdoor air intakes. Install a mechanical dampening filter such as a moisture eliminator, perforated plate, air cleaning filter or increase the airflow setpoint. Increasing the LCD integration, LCD INTG, may improve performance. Call EBTRON for assistance.		
			ⓘ	*Transient wind gusts will also affect analog and network outputs for airflow.*		
	The airflow input measured at the host control system is 0% when the airflow value displayed on the LCD is greater than 0 FPM (CFM) [m/s (L/s)].	A4 Transmitter Models GTx116, GTx108 where x = C, M or W	1.	Are the airflow signal wires properly connected to output terminal block of the transmitter with terminal screws secure with no shorts between wires (refer to the appropriate *Wiring Guide* for terminal connections)?	3.	2.
			⚠	*"Live" wiring to transmitter may damage the transmitter and void warranty*		
			2.	Move the power switch to the "OFF" position. Properly connect the airflow signal wires to the output terminal block. Move the power switch to the "ON" position. Is the airflow input signal at the host control system > 0%?	DONE	3.
			3.	Move the power switch to the "OFF" position. Check that the output card below the LCD is properly seated on the main circuit board. Is the output card properly seated?	6.	4.
			4.	Check pins on the main circuit board for damage. Are the pins damaged?	CALL	5.
			5.	Properly seat the output card on the pins. Move the power switch to the "ON" position. Is the airflow input signal at the host control system > 0%?	DONE	6.
			6.	Move the power switch to the "OFF" position. Remove the signal wire connected to the airflow output terminal. Verify the airflow output signal configuration of the transmitter (Section 2). Is the airflow output signal of the transmitter set to 4-20 mA?	7.	8.
			7.	Configure your VOM to measure mA. Place the leads of the VOM is across the airflow output and common terminals. Move the power switch to the "ON" position and wait for the transmitter to return to normal operation. Measure the output signal current. Is the current greater than 4 mA?	11.	9.
			8.	Configure your VOM to measure VDC. Place the leads of the VOM is across the airflow output and common terminals. Move the power switch to the "ON" position and wait for the transmitter to return to normal operation. Measure the output signal voltage. Is the voltage greater than 0 VDC?	11.	9.
			9.	Move the power switch to the "OFF" position. Remove and inspect the signal fuse, F1, on the output card. Is the fuse blown?	10.	CALL
				Check the fuse with a VOM set to ohms to verify the fuse is good (shorted) or blown (open).		
			10.	Replace the glass output signal fuse with a fast-acting 0.125 A fuse. Move the power switch to the "ON" position. Measure the output signal current or voltage as directed in steps 7 or 8 depending on the output configuration of the transmitter. Is the measured output signal greater than 0 VDC (transmitters configured for VDC output) or 4 mA (transmitters configured for mA output)?	11.	CALL
			11.	There is most likely a problem with the control wiring or host control system. Check for shorts, extraneous voltages (AC or DC) and/or other problems with the control wiring or the control system input circuit. Resolve the problem before reconnecting the signal wire to the transmitter.		
			⚠	*A problem with the control wiring or host control system may damage the transmitter and void warranty. Do not reconnect the signal wires to the transmitter unless the problem has been resolved.*		

TABLE 6-2 Non-FDS (Non-Fault Detection System) Troubleshooting

	Symptom	Transmitter Models		Procedure	Yes	No
OUTPUT		A4 Transmitter Model GTx116e, GTx208e, GTx108e, GTx204e	1.	Are the airflow signal wires properly connected to output terminal block of the transmitter with terminal screws secure with no shorts between wires (refer to the appropriate *Wiring Guide* for terminal connections)?	3.	2.
			⚠	*"Live" wiring to transmitter may damage the transmitter and void warranty*		
			💡	*These models have solid state fuses. Allow at least one minute between power cycles to allow the solid state fuses to reset in the event they were in a fault condition.*		
			2.	Move the power switch to the "OFF" position. Properly connect the airflow signal wires to the output terminal block. Move the power switch to the "ON" position. Is the airflow input signal at the host control system > 0%?	DONE	3.
			3.	Move the power switch to the "OFF" position. Remove the signal wire connected to the airflow output terminal. Verify the airflow output signal configuration of the transmitter (Section 2). Is the airflow output signal of the transmitter set to 4-20 mA?	4.	5.
			4.	Configure your VOM to measure mA. Place the leads of the VOM is across the airflow output and common terminals. Move the power switch to the "ON" position and wait for the transmitter to return to normal operation. Measure the output signal current. Is the current greater than 4 mA?	6.	CALL
			5.	Configure your VOM to measure VDC. Place the leads of the VOM is across the airflow output and common terminals. Move the power switch to the "ON" position and wait for the transmitter to return to normal operation. Measure the output signal voltage. Is the voltage greater than 0 VDC?	6.	CALL
			6.	There is most likely a problem with the control wiring or host control system. Check for shorts, extraneous voltages (AC or DC) and/or other problems with the control wiring or the control system input circuit. Resolve the problem before reconnecting the signal wire to the transmitter.		
			⚠	*A problem with the control wiring or host control system may damage the transmitter and void warranty. Do not reconnect the signal wires to the transmitter unless the problem has been resolved.*		
		A4 Transmitter Models HTA104 and HTA202	1.	Are the airflow signal wires properly connected to output terminal block of the transmitter with terminal screws secure with no shorts between wires (refer to the appropriate *Wiring Guide* for terminal connections)?	3.	2.
			⚠	*"Live" wiring to transmitter may damage the transmitter and void warranty*		
			2.	Move the power switch to the "OFF" position. Properly connect the airflow signal wires to the output terminal block. Move the power switch to the "ON" position. Is the airflow input signal at the host control system > 0%?	DONE	3.
			3.	Move the power switch to the "OFF" position. Remove the signal wire connected to the airflow output terminal. Verify the airflow output signal configuration of the transmitter (Section 2). Is the airflow output signal of the transmitter set to 4-20 mA?	4.	5.
			4.	Configure your VOM to measure mA. Place the leads of the VOM is across the airflow output and common terminals. Move the power switch to the "ON" position and wait for the transmitter to return to normal operation. Measure the output signal current. Is the current greater than 4 mA?	8.	6.
			5.	Configure your VOM to measure VDC. Place the leads of the VOM is across the airflow output and common terminals. Move the power switch to the "ON" position and wait for the transmitter to return to normal operation. Measure the output signal voltage. Is the voltage greater than 0 VDC?	8.	6.
			6.	Move the power switch to the "OFF" position. Remove and inspect the signal fuse, F1, on the output card. Is the fuse blown?	7.	CALL
			💡	*Check the fuse with a VOM set to ohms to verify the fuse is good (shorted) or blown (open).*		

TABLE 6-2 Non-FDS (Non-Fault Detection System) Troubleshooting

	Symptom	Transmitter Models	Procedure		Yes	No
OUTPUT			7.	Replace the glass output signal fuse with a fast-acting 0.125 A fuse. Move the power switch to the "ON" position. Measure the output signal current or voltage as directed in steps 7 or 8 depending on the output configuration of the transmitter. Is the measured output signal greater than 0 VDC (transmitters configured for VDC output) or 4 mA (transmitters configured for mA output)?	8.	CALL
			8.	There is most likely a problem with the control wiring or host control system. Check for shorts, extraneous voltages (AC or DC) and/or other problems with the control wiring or the control system input circuit. Resolve the problem before reconnecting the signal wire to the transmitter.		
			⚠	*A problem with the control wiring or host control system may damage the transmitter and void warranty. Do not reconnect the signal wires to the transmitter unless the problem has been resolved.*		
		EB-Flow2 Transmitter Model EF-A2000	1.	Are the airflow signal wires properly connected to output terminal block of the transmitter with terminal screws secure with no shorts between wires (refer to the appropriate *Wiring Guide* for terminal connections)?	3.	2.
			⚠	*"Live" wiring to transmitter may damage the transmitter and void warranty*		
			💡	*These models have solid state fuses. Allow at least one minute between power cycles to allow the solid state fuses to reset in the event they were in a fault condition.*		
			2.	Make sure the 24 VAC power source is not energized. Properly connect the airflow signal wires to the output terminal block. Energize the 24 VAC power source. Is the airflow input signal at the host control system > 0%?	DONE	3.
			3.	Make sure the 24 VAC power source is not energized. Remove the signal wire connected to the airflow output terminal. Verify the airflow output signal configuration of the transmitter (Section 2). Configure your VOM to measure VDC. Place the leads of the VOM is across the airflow output and common terminals. Energize the 24 VAC power source. and wait for the transmitter to return to normal operation. Measure the output signal voltage. Is the voltage greater than 0 VDC (2 VDC if the output is set to 2-10 V)?	4.	CALL
			4.	There is most likely a problem with the control wiring or host control system. Check for shorts, extraneous voltages (AC or DC) and/or other problems with the control wiring or the control system input circuit. Resolve the problem before reconnecting the signal wire to the transmitter.		
			⚠	*A problem with the control wiring or host control system may damage the transmitter and void warranty. Do not reconnect the signal wires to the transmitter unless the problem has been resolved.*		
	The host control system is configured for a 0-10 VDC (or 0-5 VDC) input and both of the output signals from the transmitter will not go below 2 VDC (or 1 VDC).	A4 Transmitter Models HTA104 and HTA202	1.	Simultaneously press the ESC and ↑ pushbuttons during normal operation to determine the setting for AOUT. Is the AOUT parameter set to 4-20mA?	2.	CALL
			2.	Use the ↑ and ↓ pushbuttons to select 0-10V (or 0-5V). Press the ENT pushbutton. Verify the output jumper positions on the main circuit board for each output when prompted. Press the ESC pushbutton to return to normal operation. Does the output go below 2 VDC (or 1 VDC when set to 0-5 V)?	DONE	CALL
		EB-Flow2 Transmitter Model EF-A2000	1.	Simultaneously press the ESC and ↑ pushbuttons during normal operation to determine the setting for AOUT. Is the AOUT parameter set to 2-10V?	2.	CALL
			2.	Use the ↑ and ↓ pushbuttons to select 0-10V (or 0-5V). Press the ENT pushbutton. Press the ESC pushbutton to return to normal operation. Does the output go below 2 VDC (or 1 VDC when set to 0-5 V)?	DONE	CALL

TABLE 6-2 Non-FDS (Non-Fault Detection System) Troubleshooting

	Symptom	Transmitter Models		Procedure	Yes	No
OUTPUT	The host control system is configured for a 0-10 VDC (or 0-5 VDC) input and one or both of the output signals from the transmitter are greater than 10 VDC.	A4 Transmitter Models GTx116, GTx108 where x = C, M or W	1.	Simultaneously press the ESC and ↑ pushbuttons during normal operation to determine the setting for AOUT1. Use the ↓ pushbutton to determine the setting for AOUT2. Are the parameters set to 4-20mA?	2.	CALL
			2.	Set SW1 (AO1) to VDC and SW2 (AO2) to VDC. Check that AOUT1 and AOUT2 have been modified using the ↑ and ↓ pushbuttons. If a 0-5 VDC signal is required, press the ENT pushbutton when 0-10V is shown and use the ↑ and ↓ pushbuttons to select 0-5V for each output and press the ENT pushbutton to accept each change. Press the ESC pushbutton to return to normal operation. Do the output signals of concern go below 10 VDC?	DONE	CALL
		A4 Transmitter Model GTx116e, GTx208e, GTx108e, GTx204e	1.	Simultaneously press the ESC and ↑ pushbuttons during normal operation to determine the setting for AOUT. Is the AOUT parameter set to 4-20mA?	2.	CALL
			2.	Use the ↑ and ↓ pushbuttons to select 0-10V (or 0-5V). Press the ENT pushbutton. Press the ESC pushbutton to return to normal operation. Do the output signals of concern go below 10 VDC?	DONE	CALL
		A4 Transmitter Models HTA104 and HTA202	1.	Check the output jumper positions for OUT1 (AO1) and OUT2 (AO2) on the main circuit board. Are the jumpers configured for mA?	2.	CALL
			2.	Configure the jumpers OUT1 and OUT2 for VDC. Do the output signals of concern go below 10 VDC?	DONE	CALL
	The displayed reading (airflow, temperature or psychrometric value) is relatively stable but the associated analog output signal is significantly fluctuating.	All Transmitter Models	1.	Use the TEST OUT TOOL (refer to Section 4) and set the analog output of concern to 50%. Is the output stable? Press the ESC pushbutton to return to normal operation.	2.	4.
			2.	Is the signal of concern the airflow output signal?	3.	CALL
			3.	Increase the integration parameter, INTG (Section 3). Is the output signal stable?	DONE	CALL
			4.	Move the power switch to the "OFF" position (models with a power switch) or make sure the 24 VAC power source is not energized. Remove all signal wires from the transmitter. Verify the output signal configuration of the output signal of concern (Section 2). Is the output signal of concern set to 4-20 mA?	5.	7.
			⚠	*"Live" wiring to transmitter may damage the transmitter and void warranty*		
			5.	Configure your VOM to measure mA. Place the leads of the VOM is across the airflow output and common terminals. Move the power switch to the "ON" position (models with a power switch) or energize 24 VAC power. Wait for the transmitter to return to normal operation. Measure the output signal current. Is the output signal stable?	6.	CALL
			6.	There is most likely a problem with the control wiring or host control system. Check for intermittent shorts, extraneous voltages (AC or DC) and/or other problems with the control wiring or the control system input circuit. Resolve the problem before reconnecting the signal wire to the transmitter.		
			7.	Configure your VOM to measure VDC. Place the leads of the VOM is across the airflow output and common terminals. Move the power switch to the "ON" position (models with a power switch) or energize 24 VAC power. Wait for the transmitter to return to normal operation. Measure the output signal voltage. Is the output signal stable?	8.	CALL
			8.	Has twisted, shielded wire been provided between the transmitter and host control system with the shield properly terminated at the host control system?	CALL	9.
			9.	Twisted, shielded wire should be provided on transmitters configured for 0-5V, 0-10V or 2-10V to avoid the pickup of extraneous electrical noise. Remedy the problem and properly terminate the shield. Refer to the appropriate Wiring Guide for the transmitter provided.		

TABLE 6-2 Non-FDS (Non-Fault Detection System) Troubleshooting

	Symptom	Transmitter Models		Procedure	Yes	No
OUTPUT	The airflow rate, in CFM [L/s], indicated at the host control system does not match the airflow rate shown on the transmitter display.	A4 Transmitter Models GTx116 and GTx108 where x = C, M or W	1.	Is the transmitter displaying airflow in CFM [L/s]?	3.	2.
			2.	Set the LCD UM parameter to CFM {L/s] (Section 3). Does the airflow indicated by the control system match the transmitter display?	DONE	3.
			3.	Press the ↑ and ↓ pushbuttons simlultaneously to enter the setup menu and retrieve the AREA (Section 3) parameter. Press the ESC pushbutton to return to normal operation. Is the AREA paramter equal the area where the AMD is installed?	5.	4.
			4.	Modify the AREA parameter so that it matches the area where the AMD is installed. Does the airflow indicated by the control system match the transmitter display?	DONE	5.
				Use the AREA WIZ Tool (or FAZ WIZ tool for -F probe types) to determine and automatically save the AREA parameter (Section 4).		
			5.	Is the control system configured for a 4-20 mA input?	6.	8.
			6.	Simultaneously press the ESC and ↑ pushbuttons during normal operation to determine the setting for AOUT1. Is AOUT1 set to 4-20mA?	11.	7.
			7.	Set SW1 on the output card to mA. Check that AOUT1 has been modified on the display. Press the ESC pushbutton to return to normal operation. Does the airflow indicated by the control system match the transmitter display?	DONE	11.
			8.	Is the control system configured for a 0-10 VDC (or 0-5 VDC) input?	9.	CALL
			9.	Simultaneously press the ESC and ↑ pushbuttons during normal operation to determine the setting for AOUT1. Is AOUT1 set to 0-10V (or 0-5V)?	11.	10.
			10.	Set SW1 to VDC. Check that AOUT1 has been modified.. If a 0-5 VDC signal is required, press the ENT pushbutton when 0-10V is shown and use the ↑ and ↓ pushbuttons to select 0-5V for AO1 and press the ENT pushbutton to accept each change. Press the ESC pushbutton to return to normal operation. Does the airflow indicated by the control system match the transmitter display?	DONE	11.
			11.	Press the ↑ and ↓ pushbuttons simlultaneously to enter the setup menu and retrieve the AO1 UM and AO1 FS (Section 3) parameters. Press the ESC pushbutton to return to normal operation. Is the AO1 UM parameter set to FPM [m/s]?	12.	13.
				This information can easily be retrieved using the EB-Link Reader application for Android® an iOS® phones or tablets (Section 4).		
			12.	The full scale or span of the host control system should equal the AREA paramteter x the AO1 FS parameter. The minimum scale of the host control system should equal 0. Is the host control system setup properly?	CALL	14.
			13.	The full scale or span of the host control system should equal the AO1 FS parameter. The minimum scale of the host control system should equal 0. Is the host control system setup properly?	CALL	14.
			14.	Correct the host control system signal conversion. Does the control system airflow rate match the displayed airflow rate?	DONE	CALL

TABLE 6-2 Non-FDS (Non-Fault Detection System) Troubleshooting

	Symptom	Transmitter Models	Procedure		Yes	No
OUTPUT		A4 Transmitter Model GTx116e, GTx208e, GTx108e, GTx204e	1.	Is the transmitter displaying airflow in CFM [L/s]?	3.	2.
			2.	Set the LCD UM parameter to CFM {L/s] (Section 3). Does the airflow indicated by the control system match the transmitter display?	DONE	3.
			3.	Press the ↑ and ↓ pushbuttons simlultaneously to enter the setup menu and retrieve the AREA (Section 3) parameter. Press the ESC pushbutton to return to normal operation. Is the AREA paramter equal the area where the AMD is installed?	5.	4.
			4.	Modify the AREA parameter so that it matches the area where the AMD is installed. Does the airflow indicated by the control system match the transmitter display?	DONE	5.
				Use the AREA WIZ Tool (or FAN WIZ tool for -F probe types) to determine and automatically save the AREA parameter (Section 4).		
			5.	Is the control system configured for a 4-20 mA input?	6.	8.
			6.	Simultaneously press the ESC and ↑ pushbuttons during normal operation to determine the setting for AOUT. Is AOUT set to 4-20mA?	11.	7.
			7.	Use the ↑ and ↓ pushbuttons to select 4-20mA. Press the ENT pushbutton. Press the ESC pushbutton to return to normal operation. Does the airflow indicated by the control system match the transmitter display?	DONE	11.
			8.	Is the control system configured for a 0-10 VDC (or 0-5 VDC) input?	9.	CALL
			9.	Simultaneously press the ESC and ↑ pushbuttons during normal operation to determine the setting for AOUT. Is AOUT set to 0-10V (or 0-5V)?	11.	10.
			10.	Use the ↑ and ↓ pushbuttons to select 0-10V (or 0-5V). Press the ENT pushbutton. Press the ESC pushbutton to return to normal operation. Does the airflow indicated by the control system match the transmitter display?	DONE	11.
			11.	Press the ↑ and ↓ pushbuttons simlultaneously to enter the setup menu and retrieve the AO1 UM and AO1 FS (Section 3) parameters. Press the ESC pushbutton to return to normal operation. Is the AO1 UM parameter set to FPM [m/s]?	12.	13.
				This information can easily be retrieved using the EB-Link Reader application for Android® an iOS® phones or tablets (Section 4).		
			12.	The full scale or span of the host control system should equal the AREA paramteter x the AO1 FS parameter. The minimum scale of the host control system should equal 0. Is the host control system setup properly?	CALL	14.
			13.	The full scale or span of the host control system should equal the AO1 FS parameter. The minimum scale of the host control system should equal 0. Is the host control system setup properly?	CALL	14.
			14.	Correct the host control system signal conversion. Does the control system airflow rate match the displayed airflow rate?	DONE	CALL
		A4 Transmitter Model HTA104	1.	Is the transmitter displaying airflow in CFM [L/s]?	3.	2.
			2.	Set the LCD UM parameter to CFM {L/s] (Section 3). Does the airflow indicated by the control system match the transmitter display?	DONE	3.
			3.	Press the ↑ and ↓ pushbuttons simlultaneously to enter the setup menu and retrieve the AREA (Section 3) parameter. Press the ESC pushbutton to return to normal operation. Is the AREA paramter equal the area where the AMD is installed?	5.	4.
			4.	Modify the AREA parameter so that it matches the area where the AMD is installed. Does the airflow indicated by the control system match the transmitter display?	DONE	
				Use the AREA WIZ Tool (or FAN WIZ tool for -F probe types) to determine and automatically save the AREA parameter (Section 4).		

TABLE 6-2 Non-FDS (Non-Fault Detection System) Troubleshooting

	Symptom	Transmitter Models	Procedure		Yes	No
OUTPUT			5.	Is the control system configured for a 4-20 mA input?	6.	10.
			6.	Simultaneously press the ESC and ↑ pushbuttons during normal operation to determine the setting for AOUT. Is AOUT set to 4-20mA?	8.	7.
			7.	Use the ↑ and ↓ pushbuttons to select 4-20mA. Press the ENT pushbutton. Press the ESC pushbutton to return to normal operation. Does the airflow indicated by the control system match the transmitter display?	DONE	8.
			8.	Check the output jumper position for OUT1 (AO1) on the main circuit board. Is the jumper configured for mA?	15.	9.
			9.	Configure the jumper OUT1 for mA. Does the airflow indicated by the control system match the transmitter display?	DONE	15.
			10.	Is the control system configured for a 0-10 VDC (or 0-5 VDC) input?	11.	CALL
			11.	Simultaneously press the ESC and ↑ pushbuttons during normal operation to determine the setting for AOUT. Is AOUT set to 0-10V (or 0-5V)?	13.	12.
			12.	Use the ↑ and ↓ pushbuttons to select 0-10V (or 0-5V). Press the ENT pushbutton. Press the ESC pushbutton to return to normal operation. Does the airflow indicated by the control system match the transmitter display?	DONE	13.
			13.	Check the output jumper position for OUT1 (AO1) on the main circuit board. Is the jumper configured for VDC?	15.	14.
			14.	Configure the jumper OUT1 for VDC. Does the airflow indicated by the control system match the transmitter display?	DONE	15.
			15.	Press the ↑ and ↓ pushbuttons simlultaneously to enter the setup menu and retrieve the AO1 UM and AO1 FS (Section 3) parameters. Press the ESC pushbutton untill the transmitter returns to normal operation. Is the AO1 UM parameter set to FPM [m/s]?	16.	17.
			16.	The full scale or span of the host control system should equal the AREA paramteter x the AO1 FS parameter. The minimum scale of the host control system should equal 0. Is the host control system setup properly?	CALL	18.
			17.	The full scale or span of the host control system should equal the AO1 FS parameter. The minimum scale of the host control system should equal 0. Is the host control system setup properly?	CALL	18.
			18.	Correct the host control system signal conversion. Does the control system airflow rate match the displayed airflow rate?	DONE	CALL
		EB-Flow2 Transmitter Model EF-A2000	1.	Is the transmitter displaying airflow in CFM [L/s]?	3.	2.
			2.	Set the LCD UM parameter to CFM {L/s] (Section 3). Does the airflow indicated by the control system match the transmitter display?	DONE	3.
			3.	Press the ↑ and ↓ pushbuttons simlultaneously to enter the setup menu and retrieve the AREA (Section 3) parameter. Press the ESC pushbutton to return to normal operation. Is the AREA paramter equal the area where the AMD is installed?	5.	4.
			4.	Modify the AREA parameter so that it matches the area where the AMD is installed. Does the airflow indicated by the control system match the transmitter display?	DONE	5.
				Use the AREA WIZ Tool to determine and automatically save the AREA parameter (Section 4).		
			5.	Is the control system configured for a 4-20 mA input?	6.	8.
			6.	Simultaneously press the ESC and ↑ pushbuttons during normal operation to determine the setting for AOUT. Is AOUT set to 2-10V (or 1-5V)?	11.	7.
				The 1-5 VDC and 2-10 VDC outputs can drive a 250 ohm and 500 ohm, respectively, 4-20 mA input circuit		

TABLE 6-2 Non-FDS (Non-Fault Detection System) Troubleshooting

	Symptom	Transmitter Models	Procedure		Yes	No
OUTPUT			7.	Use the ↑ and ↓ pushbuttons to select 2-10V (arcross a 500 ohm load) or 1-5V (across a 250 ohm load). Press the ENT pushbutton. Press the ESC pushbutton to return to normal operation. Does the airflow indicated by the control system match the transmitter display?	DONE	11.
			8.	Is the control system configured for a 0-10 VDC (or 0-5 VDC) input?	9.	CALL
			9.	Simultaneously press the ESC and ↑ pushbuttons during normal operation to determine the setting for AOUT. Is AOUT set to 0-10V (or 0-5V)?	11.	10.
			10.	Use the ↑ and ↓ pushbuttons to select 0-10V (or 0-5V). Press the ENT pushbutton. Press the ESC pushbutton to return to normal operation. Does the airflow indicated by the control system match the transmitter display?	DONE	11.
			11.	Press the ↑ and ↓ pushbuttons simlultaneously to enter the setup menu and retrieve the AO1 ASGN, AO1 UM and AO1 FS (Section 3) parameters. Press the ESC pushbutton untill the transmitter returns to normal operation. Is the AO1 UM parameter set to FPM {L/s]?	12.	13.
			⚠	*If the AO1 ASGN parameter is set to F1-2 or F2-1, the AO1 UM paramter must be set to CFM [L/s] unless the area of both locations are identical.*		
			ⓘ	*If the transmitter is configured for two measurement location, repeat steps 12 to 14 for the corresponding AO2 parameters.*		
			12.	The full scale or span of the host control system should equal the AREA paramteter x the AO1 FS parameter. The minimum scale of the host control system should equal 0. Is the host control system setup properly?	CALL	14.
			ⓘ	*If the transmitter is configured for two measurement location, AREA1 and AREA2 should be used for Location 1 and Location 2, respectively.*		
			13.	The full scale or span of the host control system should equal the AO1 FS parameter. The minimum scale of the host control system should equal 0. Is the host control system setup properly?	CALL	14.
			14.	Correct the host control system signal conversion. Does the control system airflow rate match the displayed airflow rate?	DONE	CALL
	The temperature, in °F [°C], indicated at the host control system does not match the temperature shown on the transmitter display.	A4 Transmitter Models GTx116 and GTx108 where x = C, M or W	1.	Press the ↑ and ↓ pushbuttons simlultaneously to enter the setup menu and retrieve the AO2 ASGN parameter (Section 3). Press the ESC pushbutton until the transmitter returns to normal operation. Is the AO2 ASGN parameter set to TEMP?	3.	2.
			💡	*This information can easily be retrieved using the EB-Link Reader application for Android® an iOS® phones or tablets (Section 4).*		
			2.	The transmitter has been field setup to use AO2 as a binary airflow alarm, fan airflow alarm (-F/An probe types only) or a system status alarm. Verify the desired function of AO2 before making any changes. If temperature output is desired on AO2, change the AO2 ASGN parameter to TEMP and use the values for the AO2 MS and AO2 FS parameters to determine the temperature at the host control system.		
			3.	Is the control system configured for a 4-20 mA input?	4.	6.
			4.	Simultaneously press the ESC and ↑ pushbuttons during normal operation. Use the ↑ and ↓ pushbuttons to determine the setting for AOUT2. Is AOUT2 set to 4-20mA?	9.	5.
			5.	Set SW2 on the output card to mA. Check that AOUT2 has been modified on the display. Press the ESC pushbutton to return to normal operation. Does the temperature indicated by the control system match the transmitter display?	DONE	9.
			6.	Is the control system configured for a 0-10 VDC (or 0-5 VDC) input?	7.	CALL

TABLE 6-2 Non-FDS (Non-Fault Detection System) Troubleshooting

	Symptom	Transmitter Models	Procedure		Yes	No
OUTPUT			7.	Simultaneously press the ESC and ↑ pushbuttons during normal operation. Use the ↑ and ↓ pushbuttons to determine the setting for AOUT2. Is AOUT2 set to 0-10 V (or 0-5V)?	9.	8.
			8.	Set SW2 to VDC. Check that AOUT2 has been modified.. If a 0-5 VDC signal is required, press the ENT pushbutton when 0-10V is shown and use the ↑ and ↓ pushbuttons to select 0-5V for AO2 and press the ENT pushbutton to accept each change. Press the ESC pushbutton to return to normal operation. Does the temperature indicated by the control system match the transmitter display?	DONE	9.
			9.	Press the ↑ and ↓ pushbuttons simlultaneously to enter the setup menu and retrieve the AO2 MS and AO2 FS parameters (Section 3). Press the ESC pushbutton to return to normal operation. The full scale of the host control system should be equal to the AO2 FS parameter and the minimum scale should be the AO2 MS parameter. If the controller uses span and offset in lieu of full scale and minimum scale, the span is equal to AO2 FS minus AO2 MS and the offset is equal to AO2 MS. Is the host control system setup properly?	CALL	10.
				This information can easily be retrieved using the EB-Link Reader application for Android® an iOS® phones or tablets (Section 4).		
			10	Correct the host control system signal conversion. Does the temperature indicated by the control system match the transmitter display?	DONE	CALL
		A4 Transmitter Model GTx116e, GTx108e	1.	Press the ↑ and ↓ pushbuttons simlultaneously to enter the setup menu and retrieve the AO2 ASGN parameter (Section 3). Press the ESC pushbutton until the transmitter returns to normal operation. Is the AO2 ASGN parameter set to TEMP?	3.	2.
				This information can easily be retrieved using the EB-Link Reader application for Android® an iOS® phones or tablets (Section 4).		
			2.	The transmitter has been field setup to use AO2 as a binary airflow alarm or a system status alarm. Verify the desired function of AO2 before making any changes. If temperature output is desired on AO2, change the AO2 ASGN parameter to TEMP and use the values for the AO2 MS and AO2 FS parameters to determine the temperature at the host control system.		
			3.	Is the control system configured for a 4-20 mA input?	4.	6.
			4.	Simultaneously press the ESC and ↑ pushbuttons during normal operation to determine the setting for AOUT. Is AOUT set to 4-20mA?	9.	5.
			5.	Use the ↑ and ↓ pushbuttons to select 4-20mA. Press the ENT pushbutton. Press the ESC pushbutton to return to normal operation. Does the temperature indicated by the control system match the transmitter display?	DONE	9.
				AOUT affects the output of all analog output signals. If the airflow and/or psychrometric output signal(s) are/is connected to a device with a different input signal configuration, the airflow output signal will no longer be compatible with the host input device.		
			6.	Is the control system configured for a 0-10 VDC (or 0-5 VDC) input?	7.	CALL
			7.	Simultaneously press the ESC and ↑ pushbuttons during normal operation to determine the setting for AOUT. Is AOUT set to 0-10V (or 0-5V)?	9.	8.

TABLE 6-2 Non-FDS (Non-Fault Detection System) Troubleshooting

	Symptom	Transmitter Models	Procedure		Yes	No
OUTPUT			8.	Use the ↑ and ↓ pushbuttons to select 0-10V (or 0-5V). Press the ENT pushbutton. Press the ESC pushbutton to return to normal operation. Does the temperature indicated by the control system match the transmitter display?	DONE	9.
			⚠	*AOUT affects the output of all analog output signals. If the airflow and/or psychrometric output signal(s) are/is connected to a device with a different input signal configuration, the airflow output signal will no longer be compatible with the host input device.*		
			9.	Press the ↑ and ↓ pushbuttons simlultaneously to enter the setup menu and retrieve the AO2 MS and AO2 FS parameters (Section 3). Press the ESC pushbutton to return to normal operation. The full scale of the host control system should be equal to the AO2 FS parameter and the minimum scale should be the AO2 MS parameter. If the controller uses span and offset in lieu of full scale and minimum scale, the span is equal to AO2 FS minus AO2 MS and the offset is equal to AO2 MS. Is the host control system setup properly?	CALL	10.
			💡	*This information can easily be retrieved using the EB-Link Reader application for Android® an iOS® phones or tablets (Section 4).*		
			10	Correct the host control system signal conversion. Does the temperature indicated by the control system match the transmitter display?	DONE	CALL
		A4 Transmitter Model HTA104	1.	Press the ↑ and ↓ pushbuttons simlultaneously to enter the setup menu and retrieve the AO2 ASGN parameter (Section 3). Press the ESC pushbutton until the transmitter returns to normal operation. Is the AO2 ASGN parameter set to TEMP?	3.	2.
			2.	The transmitter has been field setup to use AO2 as a binary airflow alarm or a system status alarm. Verify the desired function of AO2 before making any changes. If temperature output is desired on AO2, change the AO2 ASGN parameter to TEMP and use the values for the AO2 MS and AO2 FS parameters to determine the temperature at the host control system.		
			3.	Is the control system configured for a 4-20 mA input?	4.	8.
			4.	Simultaneously press the ESC and ↑ pushbuttons during normal operation to determine the setting for AOUT. Is AOUT set to 4-20mA?	6.	5.
			5.	Use the ↑ and ↓ pushbuttons to select 4-20mA. Press the ENT pushbutton. Press the ESC pushbutton to return to normal operation. Does the temperature indicated by the control system match the transmitter display?	DONE	6.
			⚠	*AOUT affects the output of all analog output signals. If the airflow output signal is connected to a device with a different input signal configuration, the airflow output signal will no longer be compatible with the host input device.*		
			6.	Check the output jumper position for OUT2 (AO2) on the main circuit board. Is the jumper configured for mA?	13.	7.
			7.	Configure the jumper OUT2 for mA. Does the temperature indicated by the control system match the transmitter display?	DONE	13.
			8.	Is the control system configured for a 0-10 VDC (or 0-5 VDC) input?	9.	CALL
			9.	Simultaneously press the ESC and ↑ pushbuttons during normal operation to determine the setting for AOUT. Is AOUT set to 0-10V (or 0-5V)?	11.	10.

TABLE 6-2 Non-FDS (Non-Fault Detection System) Troubleshooting

	Symptom	Transmitter Models	Procedure		Yes	No
OUTPUT			10.	Use the ↑ and ↓ pushbuttons to select 0-10V (or 0-5V). Press the ENT pushbutton. Press the ESC pushbutton to return to normal operation. Does the temperature indicated by the control system match the transmitter display?	DONE	11.
			⚠	*AOUT affects the output of all analog output signals. If the airflow output signal is connected to a device with a different input signal configuration, the airflow output signal will no longer be compatible with the host input device.*		
			11.	Check the output jumper position for OUT2 (AO2) on the main circuit board. Is the jumper configured for VDC?	13.	12.
			12.	Configure the jumper OUT1 for VDC. Does the temperature indicated by the control system match the transmitter display?	DONE	13.
			13.	Press the ↑ and ↓ pushbuttons simlultaneously to enter the setup menu and retrieve the AO2 MS and AO2 FS parameters (Section 3). Press the ESC pushbutton to return to normal operation. The full scale of the host control system should be equal to the AO2 FS parameter and the minimum scale should be the AO2 MS parameter. If the controller uses span and offset in lieu of full scale and minimum scale, the span is equal to AO2 FS minus AO2 MS and the offset is equal to AO2 MS. Is the host control system setup properly?	CALL	14.
			14.	Correct the host control system signal conversion. Does the temperature indicated by the control system match the transmitter display?	DONE	CALL
		EB-Flow2 Transmitter Model EF-A2000	1.	Press the ↑ and ↓ pushbuttons simlultaneously to enter the setup menu and retrieve the AO2 ASGN parameter (Section 3). Press the ESC pushbutton until the transmitter returns to normal operation. Is the AO2 ASGN parameter set to TEMP?	3.	2.
			2.	The transmitter has been field setup to use AO2 for a second location or as a binary airflow alarm or a system status alarm. Verify the desired function of AO2 before making any changes. If temperature output is desired on AO2, change the AO2 ASGN parameter to TEMP and use the values for the AO2 MS and AO2 FS parameters to determine the temperature at the host control system.		
			3.	Is the control system configured for a 4-20 mA input?	4.	6.
			4.	Simultaneously press the ESC and ↑ pushbuttons during normal operation to determine the setting for AOUT. Is AOUT set to 2-10V (or 1-5V)?	9.	5.
			ⓘ	*The 1-5 VDC and 2-10 VDC outputs can drive a 250 ohm and 500 ohm, respectively, 4-20 mA input circuit*		
			5.	Use the ↑ and ↓ pushbuttons to select 2-10V (arcross a 500 ohm load) or 1-5V (across a 250 ohm load). Press the ENT pushbutton. Press the ESC pushbutton to return to normal operation. Does the airflow indicated by the control system match the transmitter display?	DONE	9.
			⚠	*AOUT affects the output of all analog output signals. If the airflow output signal is connected to a device with a different input signal configuration, the airflow output signal will no longer be compatible with the host input device.*		
			6.	Is the control system configured for a 0-10 VDC (or 0-5 VDC) input?	7.	CALL
			7.	Simultaneously press the ESC and ↑ pushbuttons during normal operation to determine the setting for AOUT. Is AOUT set to 0-10V (or 0-5V)?	9.	8.

TABLE 6-2 Non-FDS (Non-Fault Detection System) Troubleshooting

	Symptom	Transmitter Models	Procedure		Yes	No
OUTPUT			8.	Use the ↑ and ↓ pushbuttons to select 0-10V (or 0-5V). Press the ENT pushbutton. Press the ESC pushbutton to return to normal operation. Does the airflow indicated by the control system match the transmitter display?	DONE	9.
			⚠	*AOUT affects the output of all analog output signals. If the airflow output signal is connected to a device with a different input signal configuration, the airflow output signal will no longer be compatible with the host input device.*		
			9.	Press the ↑ and ↓ pushbuttons simlultaneously to enter the setup menu and retrieve the AO2 MS and AO2 FS parameters (Section 3). Press the ESC pushbutton to return to normal operation. The full scale of the host control system should be equal to the AO2 FS parameter and the minimum scale should be the AO2 MS parameter. If the controller uses span and offset in lieu of full scale and minimum scale, the span is equal to AO2 FS minus AO2 MS and the offset is equal to AO2 MS. Is the host control system setup properly?	CALL	10.
			10.	Correct the host control system signal conversion. Does the temperature indicated by the control system match the transmitter display?	DONE	CALL
	The psychrometric value, RH in %RH, Enthalpy in Btu/lb [kj/kg] or dew point in °F [°C], indicated at the host control system does not match the psycrhrometric value shown on the transmitter display.	A4 Transmitter Model GTx116e	1.	Is the transmitter displaying the proper psychrometric value (i.e. RH, Enthalpy or Dew Point)?	3.	2.
			2.	Press the ↑ and ↓ pushbuttons simlultaneously to enter the setup menu and and set H CONFIG for the psychrometric value desired (Section 3). Does the psychrometric value indicated by the control system match the transmitter display?	DONE	3.
			3.	Is the control system configured for a 4-20 mA input?	4.	6.
			4.	Simultaneously press the ESC and ↑ pushbuttons during normal operation to determine the setting for AOUT. Is AOUT set to 4-20mA?	9.	5.
			5.	Use the ↑ and ↓ pushbuttons to select 4-20mA. Press the ENT pushbutton. Press the ESC pushbutton to return to normal operation. Does the psychrometric value indicated by the control system match the transmitter display?	DONE	9.
			⚠	*AOUT affects the output of all analog output signals. If the airflow and/or psychrometric output signal(s) are/is connected to a device with a different input signal configuration, the airflow output signal will no longer be compatible with the host input device.*		
			6.	Is the control system configured for a 0-10 VDC (or 0-5 VDC) input?	7.	CALL
			7.	Simultaneously press the ESC and ↑ pushbuttons during normal operation to determine the setting for AOUT. Is AOUT set to 0-10V (or 0-5V)?	9.	8.
			8.	Use the ↑ and ↓ pushbuttons to select 0-10V (or 0-5V). Press the ENT pushbutton. Press the ESC pushbutton to return to normal operation. Does the psychrometric value indicated by the control system match the transmitter display?	DONE	9.
			⚠	*AOUT affects the output of all analog output signals. If the airflow and/or psychrometric output signal(s) are/is connected to a device with a different input signal configuration, the airflow output signal will no longer be compatible with the host input device.*		

TABLE 6-2 Non-FDS (Non-Fault Detection System) Troubleshooting

	Symptom	Transmitter Models	Procedure		Yes	No
OUTPUT			9.	Press the ↑ and ↓ pushbuttons simlultaneously to enter the setup menu and retrieve the AO3 UM, AO3 MS and AO3 FS parameters (Section 3). Press the ESC pushbutton to return to normal operation. The full scale of the host control system should be equal to the AO3 FS parameter and the minimum scale should be the AO3 MS parameter. If the controller uses span and offset in lieu of full scale and minimum scale, the span is equal to AO3 FS minus AO3 MS and the offset is equal to AO3 MS. The units of measure are equal to the AO3 UM parameter. Is the host control system setup properly?	CALL	10.
				This information can easily be retrieved using the EB-Link Reader application for Android® an iOS® phones or tablets (Section 4).		
			10.	Correct the host control system signal conversion. Does the psychrometric value indicated by the control system match the transmitter display?	DONE	CALL
NETWORK	The network is functioning properly but the transmitter is not found.	A4 Transmitter Models GTx116, GTx116e, GTx208e, GTx108, GTx108e and GTx204e where x = M	1.	Is a standard RJ-45 terminated Ethernet cable, CAT5 or greater firmly seated in the output card Ethernet 10/100 connector? (refer to the appropriate Wiring Guide for the Ethernet 10/100 connector location.)	3.	2.
			2.	Connect a standard RJ-45 terminated Ethernet cable, CAT5 or greater to the output card ETHERNET 10/100 connector. Is the transmitter found on the network?	DONE	3.
			3.	Is the activity led on the output card flashing? (refer to the appropriate Wiring Guide for activity led location)	7.	4.
			4.	Move the power switch to the "OFF" position. Check that the output card below the LCD is properly seated on the main circuit board. Is the output card properly seated?	CALL	5.
			5.	Check pins on the main circuit board for damage. Are the pins damaged?	CALL	6.
			6.	Properly seat the output card on the pins. Move the power switch to the "ON" position. Is the activity led on the output card flashing?	7.	CALL
			7.	Is the link led on the output card illuminated? (refer to the appropriate Wiring Guide for link led location)	8.	CALL
			8.	Verifiy that all Ethernet network settings are correct (Section 3). Are the Ethernet network settings correct?	CALL	9.
			9.	Set the Ethernet settings to proper values. Is the transmitter found on the network?	DONE	CALL
		A4 Transmitter Models GTx116, GTx116e, GTx208e, GTx108, GTx108e and GTx204e where x = C	1.	Is a 3-conductor network cable meeting the corresponding BACnet or Modbus standards connected to the output card terminal block with terminal screws secure with no shorts between wires (refer to the appropriate Wiring Guide for terminal block location.)	3.	2.
			2.	Move the power switch to the "OFF" position. Properly connect a 3-conductor network cable meeting the corresponding BACnet or Modbus standards to the output card terminal block. Move the power switch to the "ON" position. Is the transmitter found on the network?	DONE	3.
			3.	Move the power switch to the "OFF" position. Check that the output card below the LCD is properly seated on the main circuit board. Is the output card properly seated?	6.	4.
			4.	Check pins on the main circuit board for damage. Are the pins damaged?	CALL	5.
			5.	Properly seat the output card on the pins. Move the power switch to the "ON" position. Is the transmitter found on the network?	DONE	6.
			6.	Is the transmitter the first or last device on the network run?	7.	8.
			7.	Verify the network termination is set to either Fail-Safe Bias for first device or End of Line for last device. (refer to the appropriate Wiring Guide for termination switch location) Is the transmitter found on the network?	DONE	9.
			8.	Verify the network termination is set to No Termination. (refer to the appropriate Wiring Guide for termination switch location) Is the transmitter found on the network?	DONE	9.
			9.	Verifiy that all RS-485 network settings are correct (Section 3). Are the RS-485 network settings correct?	CALL	10.

TABLE 6-2 Non-FDS (Non-Fault Detection System) Troubleshooting

	Symptom	Transmitter Models		Procedure	Yes	No
NETWORK			10.	Set the RS-485 network settings to proper values. Is the transmitter found on the network?	DONE	CALL
		A4 Transmitter Models HTN104 and HTN202	1.	Is a 3-conductor network cable meeting the corresponding BACnet or Modbus standards connected to the output card terminal block with terminal screws secure with no shorts between wires (refer to the appropriate Wiring Guide for terminal block location)?	3.	2.
			2.	Move the power switch to the "OFF" position. Properly connect a 3-conductor network cable meeting the corresponding BACnet or Modbus standards to the output card terminal block. Move the power switch to the "ON" position. Is the transmitter found on the network?	DONE	3.
			3.	Is the transmitter the first or last device on the network run?	4.	5.
			4.	Verify the network termination is set to either Fail-Safe Bias for first device or End-of-Line for last device. (refer to the appropriate Wiring Guide for termination switch location) Is the transmitter found on the network?	DONE	5.
			5.	Verify the network termination is set to No Termination. (refer to the appropriate Wiring Guide for termination switch location) Is the transmitter found on the network?	DONE	6.
			6.	Verifiy that all RS-485 network settings are correct (Section 3). Are the RS-485 network settings correct?	CALL	7.
			7.	Set the RS-485 network settings to proper values. Is the transmitter found on the network?	DONE	CALL
		EB-Flow2 Transmitter Model EF-N2000	1.	Is a 3-conductor network cable meeting the corresponding BACnet or Modbus standards connected to the terminal block with terminal screws secure with no shorts between wires (refer to the appropriate Wiring Guide for terminal block location)?	3.	2.
			2.	Make sure the 24 VAC power source is not energized. Properly connect a 3-conductor network cable meeting the corresponding BACnet or Modbus standards to the output card terminal block. Energize the 24 VAC power source. Is the transmitter found on the network?	DONE	3.
			⚠	*"Live" wiring to transmitter may damage the transmitter and void warranty*		
			3.	Is the transmitter the first or last device on the network run?	4.	5.
			4.	Verify the network termination jumper is set to End of Line. (refer to the appropriate Wiring Guide for termination jumper location) Is the transmitter found on the network?	DONE	5.
			5.	Verify the network termination jumper is set to No Termination. (refer to the appropriate Wiring Guide for termination jumper location) Is the transmitter found on the network?	DONE	6.
			6.	Verifiy that all RS-485 network settings are correct (Section 3). Are the RS-485 network settings correct?	CALL	7.
			7.	Set the RS-485 network settings to proper values. Is the transmitter found on the network?	DONE	CALL
		A4 Transmitter Models GTx116, GTx108 where x = B	1.	Is the issue with the Ethernet network?	2.	11.
			2.	Is a standard RJ-45 terminated Ethernet cable, CAT5 or greater firmly seated in the output card Ethernet 10/100 connector (refer to the appropriate Wiring Guide for Ethernet 10/100 connector location)?	4.	3.
			3.	Connect a standard RJ-45 terminated Ethernet cable, CAT5 or greater to the output card ETHERNET 10/100 connector. Is the transmitter found on the network?	DONE	4.
			4.	Is the activity led on the output card flashing (refer to the appropriate Wiring Guide for activity led location)?	8.	5.
			5.	Move the power switch to the "OFF" position. Check that the output card below the LCD is properly seated on the main circuit board. Is the output card properly seated?	CALL	6.
			6.	Check pins on the main circuit board for damage. Are the pins damaged?	CALL	7.
			7.	Properly seat the output card on the pins. Move the power switch to the "ON" position. Is the activity led on the output card flashing?	8.	CALL
			8.	Is the link LED on the output card illuminated (refer to the appropriate Wiring Guide for link LED location)?	9.	CALL

TABLE 6-2 Non-FDS (Non-Fault Detection System) Troubleshooting

	Symptom	Transmitter Models	Procedure		Yes	No
NETWORK			9.	Verifiy that all Ethernet network settings are correct (Section 3). Are the Ethernet network settings correct?	CALL	10.
			10.	Set the Ethernet settings to proper values. Is the transmitter found on the network?	DONE	CALL
			11.	Is a 3-conductor network cable meeting the corresponding BACnet or Modbus standards connected to the output card terminal block with terminal screws secure with no shorts between wires (refer to the appropriate Wiring Guide for terminal block location)?	13.	12.
			12.	Move the power switch to the "OFF" position. Properly connect a 3-conductor network cable meeting the corresponding BACnet or Modbus standards to the output card terminal block. Move the power switch to the "ON" position. Is the transmitter found on the network?	DONE	13.
			13.	Move the power switch to the "OFF" position. Check that the output card below the LCD is properly seated on the main circuit board. Is the output card properly seated?	16.	14.
			14.	Check pins on the main circuit board for damage. Are the pins damaged?	CALL	15.
			15.	Properly seat the output card on the pins. Move the power switch to the "ON" position. Is the transmitter found on the network?	DONE	16.
			16.	Is the transmitter the first or last device on the network run?	17.	18.
			17.	Verify the network termination is set to either Fail-Safe Bias for first device or End of Line for last device. (refer to the appropriate Wiring Guide for termination switch location) Is the transmitter found on the network?	DONE	19.
			18.	Verify the network termination is set to No Termination. (refer to the appropriate Wiring Guide for termination switch location) Is the transmitter found on the network?	DONE	19.
			19.	Verifiy that all RS-485 network settings are correct (Section 3). Are the RS-485 network settings correct?	CALL	20.
			20.	Set the RS-485 network settings to proper values. Is the transmitter found on the network?	DONE	CALL
		A4 Transmitter Models GTx116, GTx116e, GTx208e, GTx108, GTx108e and GTx204e where x = L or x = F	1.	Is a cable specified by Echelon (typically Belden 8471 cable or equivalent) connected to the output terminal block with terminal screws secure with no shorts between wires (refer to the appropriate Wiring Guide for terminal block location)?	3.	2.
			2.	Connect a a cable specified by Echelon (typically Belden 8471 cable or equivalent) to the output terminal block. Is the transmitter found on the network?	DONE	3.
			3.	Is the activity led on the output card flashing (refer to the appropriate Wiring Guide for activity led location)?	7.	4.
			4.	Move the power switch to the "OFF" position. Check that the output card below the LCD is properly seated on the main circuit board. Is the output card properly seated?	CALL	5.
			5.	Check pins on the main circuit board for damage. Are the pins damaged?	CALL	6.
			6.	Properly seat the output card on the pins. Move the power switch to the "ON" position. Is the activity led on the output card flashing?	7.	CALL
			7.	Is the link LED on the output card illuminated (refer to the appropriate Wiring Guide for link LED location)?	8.	CALL
			8.	Has the transmitter been commissioned on the LON network?	CALL	9.
			9.	Commission the transmitter on the LON network. Is the transmitter found on the network?	DONE	CALL

TABLE 6-3 FDS TROUBLESHOOTING

Code(s)	Error Message	Error Description	Effect	Probable Causes	Remedy	Error Priority
1	NO PROBES	No probes are detected by transmitter.	Device will not operate.	No sensor probes are connected to the transmitter.	Connect sensor probes to transmitter.	No other flow or temperature sensor errors will occur while this error exists.
				The serial memory chip of all sensor probe plugs are not communicating with the transmitter.	Inspect sensor probe plugs for damage. Repair/replace damaged plugs. Contact EBTRON Customer Service.	
				Transmitter hardware failure.	Repair/replace damaged transmitter components. Contact EBTRON Customer Service.	
2	WRONG SENS	Mismatched sensor probe types on a single transmiter.	Device will not operate.	Sensor probes of different types are plugged into the transmitter.	Remove the improper sensor probe and reset power to the transmitter or perform RESET SENSORS.	No other flow or temperature sensor errors will occur while this error exists.
3 to 10	Px MISSING, where x=1 to 8	Registered probe missing.	Device will operate, ignore missing sensor nodes and average the remaining sensor nodes.	Sensor probe removed after initial power-up.	Inspect and reinstall removed sensor probe.	Replaces Px MEM ERROR and SENSOR x errors once transmitter detects all sensor node failures.
				Sensor probe plug or cable failed or damaged after initial power-up; transmitter cannot read serial memory chip or measure sensor nodes.	Inspect cable and sensor probe plug for damage. Repair/replace damaged plug/probe. Contact EBTRON Customer Service.	
				Transmitter hardware failure.	Repair/replace damaged transmitter components. Contact EBTRON Customer Service.	

TABLE 6-3 FDS TROUBLESHOOTING

Code(s)	Error Message	Error Description	Effect	Probable Causes	Remedy	Error Priority
11 to 18	Px MEM ERROR, where x=1 to 8	Serial memory error in probe.	Device will operate normally unless transmitter or probes are reset or a new transmitter is installed.	Serial memory chip in sensor probe plug damaged after initial power-up.	Inspect sensor probe plug for damage. Repair/replace damaged plug. Contact EBTRON Customer Service.	Low priority of sensor related errors. Will not exist with Px MISSING or NO PROBES.
				Communication of serial memory chip in sensor probe plug failed after initial power-up.	Verify ambient temperature of the transmitter is within operationing range of -20 °F to 120 °F. If temperature is outside of operating range adjust ambient temperature or relocate transmitter. If temperature is within operating range contact EBTRON Customer Service.	
				Transmitter hardware failure.	Repair/replace damaged transmitter components. Contact EBTRON Customer Service.	
19 to 34	SENSOR x, where x=1 to 16	Sensor node malfunction.	Device will operate, ignore missing sensor nodes and average the remaining sensor nodes.	Sensor node thermistor damaged.	Inspect sensor node for damage. Replace damaged probe. Contact EBTRON Customer Service.	Low priority sensor error. Will not exist with Px MISSING or NO PROBES.
				Connection to sensor node damaged.	Inspect sensor probe plug for damage. Repair/replace damaged plug. Contact EBTRON Customer Service.	
				Sensor node air temperature < -30 °F.	Increase sensor node air temperature.	
				Sensor node air velocity > 15,000 FPM.	Measurement not intended for high flow applications. Reduce sensor node air velocity.	
				Transmitter hardware failure.	Repair/replace damaged transmitter components. Contact EBTRON Customer Service.	
35	LOW TEMP	Airstream temperature below product's specified minimum (-20°F [-28.9°C]).	Device will continue to operate. Error is informational.	Sensor node air temperature < -20 °F.	Increase sensor node air temperature.	Lowest priority of sensor error. Can happen before SENSOR x error if temperature continues to fall.

TABLE 6-3 FDS TROUBLESHOOTING

Code(s)	Error Message	Error Description	Effect	Probable Causes	Remedy	Error Priority
36	HIGH TEMP	Airstream temperature above product's specified maximum (160°F [71.1°C]).	Device will continue to operate. Error is informational.	Sensor node air tempeture > 160 °F.	Reduce sensor node air temperature.	Lowest priority of sensor error. Can happen before SENSOR x error if temperature continues to rise.
40 to 43	RHx MISSING	Humidity sensor error.	Device will continue to use other connected RH sensors. If all RH sensors are missing devices will operate without psychrometric values.	Sensor probe removed after initial power-up.	Inspect and reinstall removed sensor probe.	NO PROBES is the only error that can prevent RHx MISSING.
				RH sensor damaged.	Inspect sensor for damage. Replace damaged sensor probe. Contact EBTRON Customer Service.	
				Connection to RH sensor damaged.	Inspect cable and sensor probe plug for damage. Repair/replace damaged plug/probe. Contact EBTRON Customer Service.	
				Transmitter hardware failure.	Repair/replace damaged transmitter components. Contact EBTRON Customer Service.	
50	Pb SENS ERROR	Barometric pressure sensor error.	Device will use last valid value or a nominal value if no valid value exists.	Pb sensor damaged.	Repair/replace damaged transmitter components. Contact EBTRON Customer Service.	Pb sensor error is independent of other errors.
				Connection to Pb sensor damaged; transmitter hardware failture.		
60	NUM PROBES	Missing probe at Location 2 (dual location EF units).	Device will continue to operate for the location with connected probes.	No probes are connected to the transmitter for a location.	Verify connected probes are installed in appropriate connector location. Move or install probes to correct location.	Applies to dual location transmitters only. Occurs when no probes are detected for a location after initial power-up.
				The serial memory chip of all sensor probe plugs at a location have failed.	Inspect sensor probe plugs for damage. Repair/replace dampaged plugs. Contact EBTRON Customer Service.	
				EF-x2000-U LOCATIONS setting may be inadvertently set to 2.	Verify LOCATIONS setting is correct in GLOBAL menu.	
				Dual-location transmitter installed in single location application.	Verify transmitter is correct for application.	
				Transmitter hardware failure.	Repair/replace damaged transmitter components. Contact EBTRON Customer Service.	

TABLE 6-3 FDS TROUBLESHOOTING

Code(s)	Error Message	Error Description	Effect	Probable Causes	Remedy	Error Priority
61	FAN COUNT	Fan count entry from FAN WIZ does not equal actual sensor probe count.	Device will continue to operate for the detected fans.	Incorrect FAN WIZ configuration.	Re-evaluate FAN WIZ settings. FANS x SENS/FAN.	FAN COUNT error is independent of other errors.
				Probes not connected to transmitter.	Connect missing probes.	
				Serial memory chip of sensor probe plug has failed.	Inspect connected sensor probe plugs for damage. Repair/replace damaged plugs. Contact EBTRON Customer Service.	
				Transmitter hardware failure.	Repair/replace damaged transmitter components. Contact EBTRON Customer Service.	
				Additional probes connected to transmitter.	Remove additional probes from transmitter.	
70	SYSTEM ERROR	Transmitter memory error.	Device will not operate.	Transmitter hardware failure.	Repair/replace damaged transmitter components. Contact EBTRON Customer Service.	SYSTEM ERROR is independent of other errors.
71	OUT CARD	"e" transmitter connector card communication error.	Device will operate, outputs for connected card will be invalid.	Output card connection removed from transmitter.	Inspect output card and esure that it is securely connected.	OUT CARD error is independent of other errors.
				Output card communication to transmitter failed.	Inspect output card for damage. Repair/replace damaged card. Contact EBTRON Customer Service.	
				Transmitter hardware failure.	Repair/replace damaged transmitter components. Contact EBTRON Customer Service.	
72	CON CARD	-F/An connector card communication error.	Device may operate, ignore missing sensor nodes and average the remaining sensor nodes.	Connector card damaged or removed after initial power-up.	Inspect connector card for proper connection or damage. Adjust/repair/replace connector. Contact EBTRON Customer Service.	CON CARD error is independent of other errors.
				Transmitter hardware failure.	Repair/replace damaged transmitter components. Contact EBTRON Customer Service.	

TABLE 6-3 FDS TROUBLESHOOTING

Code(s)	Error Message	Error Description	Effect	Probable Causes	Remedy	Error Priority
73	BLE COM ERROR	BLE radio error.	Device will continue to operate. Data from BLE connection will be invalid.	Communication to BLE module damaged.	Repair/replace damaged transmitter components.	BLE COM ERROR is independent of other errors.
				BLE module failure.		
				Transmitter hardware failure.		
74	AOUT ERR	"e" transmitter analog output error.	Device will continue to operate. Analog output values may be unreliable.	Communication to analog output circuit failed.	Repair/replace damaged transmitter components. Contact EBTRON Customer Service.	AOUT ERR is independent of other errors.
				Analog output connection damaged.		
				Transmitter hardware failure.		
75	CON BUS	"e" transmitter probe serial memory communication error.	Device will continue to operate. Additional connected probes will not be discovered. Psychrometric values will not be available.	Sensor probe plug or cable damaged.	Inspect connected cables and sensor probe plugs for damage. Repair/replace damaged plug/probe. Contact EBTRON Customer Service.	CON BUS error is independent of other errors.
				Transmitter hardware failure.	Repair/replace damaged transmitter components. Contact EBTRON Customer Service.	

6.4. DISCREPENCIES

In many installations, third-party airflow verification is required. If there is a discrepancy between third-party measurements and the EBTRON airflow measuring device, the following procedures are recommended.

6.4.1 Assess the Installation

- ☐ Verify that the airflow directional arrow is pointing in the direction of airflow.
- ☐ Verify that the sensor node openings are in the direction of airflow and not twisted in the airstream.
- ☐ Verify that the area entered in the transmitter matches the actual area of the duct or opening where the AMD is located.
- ☐ Verify that no active trouble codes are visible on the display.
- ☐ Verify that field adjustment has not been enabled in the transmitter.
- ☐ Verify readings using the LCD. Do not verify at the host B.A.S. system at this time.

Use the EB-Link Reader phone application to verify the area, trouble code status and field adjustment status on Gold Series transmitters.

Correct installation issues, enter the proper area, address any active trouble codes and disable field adjustment before proceeding.

- ☐ Determine if probes meet or exceed EBTRON's minimum placement guidelines.

The airflow rate indicated on the transmitter LCD (and that viewed on the EB-Link Reader) should be within the published installed accuracy of the product provided when probes meet or exceed EBTRON's minimum placement guidelines.

If the probes do not meet the minimum placement guidelines, the installed accuracy may exceed the published installed accuracy of the product provided and field adjustment may be required.

6.4.2. Assess the Verification Technique

6.4.2.1. DUCT SYSTEMS AND FAN MEASUREMENT

Ducted field measurements with handheld instruments can yield accuracies of 5% to 10% when an adequate straight run of duct is available. Applications having multiple airflow measuring devices in the same air path can compare one airflow measurement device to the other as part of the verification method.

Set the system for 100% recirculation and compare the supply airflow measurement device to the return airflow measurement device. Verify the measurement in the best location for the field measurement device.

Set the system for 100% outdoor air and compare the supply airflow measurement device to the outdoor airflow measurement device. Verify the measurement in the best location for the field measurement device.

6.4.2.2. OUTDOOR AIR INTAKES

Direct field measurement of close-coupled outdoor air intakes can approach and exceed 25%. Indirect measurement techniques to determine the outdoor airflow rate using the difference between the supply and return airflow rates or the ratios of the return air, outdoor air and mixed air (or supply air) temperatures should be avoided since uncertainties almost always exceed 25%.

EBTRON, Inc • 1663 Hwy 701 S., Loris, SC 29569 • Toll Free: 800-2EBTRON (232-8766) • Fax: 843-756-1838 • EBTRON.com

6.4.2.3. ADJUST OR VERIFY?

If the airflow measuring device is within the measurement uncertainty of the verification technique, EBTRON strongly recommends that no field adjustment correction is made. EBTRON airflow measurement devices are factory calibrated to NIST traceable standards. Field adjustment is not required when installed in accordance to published guidelines.

If field adjustment is required, a gain and/or offset adjustment can be made to the output of the device by manual entry (Section 3) or by using the Flow Adjust Wizard (Section 4).

If a one-point adjustment is made, make a gain adjustment rather than an offset adjustment to match the device to the third-party reading.

Do not make an area adjustment in lieu of a gain adjustment since area is used to verify proper setup of the airflow measurement device.

6.5. RESETTING TRANSMITTER

The SERVICE menu contains the RESET submenu category.

Simultaneously press the ESC and ENTER pushbuttons for three seconds during normal operation to enter the service menu. The transmitter continues to operate normally in the background.

The PRESETS submenu will be displayed. Press ↓ once and the RESET submenu will be displayed. Press the ENT pushbutton to select the top of the RESET submenu category.

6.5.1. Reset All

The Reset All function restores all factory default settings.

The Reset All function will restore any preconfigured factory settings entered prior to shipment to factory default settings.

[Menu path: PRESETS ↓ RESETS > ALL > NO ↓ YES

Applies to: All Advantage IV and EB Flow2 transmitter models with LCD and pushbutton interface.

6.5.2. Reset Sensors

The Reset Sensors function clears only sensor probe data.

[Menu path: PRESETS ↓ RESETS > ALL ↓ SENS > NO ↓ YES

Applies to: All Advantage IV and EB Flow2 transmitter models with LCD and pushbutton interface.

6.6. CONTACTING CUSTOMER SERVICE

For toll-free factory support call 800-2EBTRON (232-8766), Monday through Thursday 8:00 AM to 4:30 PM and Friday 8:00 AM to 2:00 PM eastern time or contact your local representative.

Getting and keeping you up and running is our number one priority. We have several factory options to get you back on track quickly.

Save time and use the EB-Link Reader application for Android and iOS phones and tablets to retrieve diagnostic data prior to contacting EBTRON Customer Service. Tell the service technician you have downloaded and saved the diagnostic file for information.

EBTRON, Inc • 1663 Hwy 701 S., Loris, SC 29569 • Toll Free: 800-2EBTRON (232-8766) • Fax: 843-756-1838 • EBTRON.com

6.6.1. Advance Replacement Service

EBTRON will send out new replacement product(s) to the customer without first examining the defective/damaged product(s) at the EBTRON factory. The Advance Replacement Policy is described below.

Advance Replacement Policy

1. The customer must perform basic field diagnostics as requested by EBTRON Customer Service to determine which product component(s) is/are defective/damaged. Once approved, a return merchandise authorization number (RMA#) will be assigned so that the defective/damaged product(s) can be returned to EBTRON by the customer at the customer's expense.
2. The customer must provide a contingency purchase order for the cost of the replacement product(s) in the event that EBTRON determines the defective/damaged product(s) is/are not covered under warranty.
3. EBTRON will expedite manufacturing and ship the advance replacement product(s) via UPS Ground or similar method, shipping charges deferred.
4. Any expedited shipping method requested by the customer will be charged to the customer.
5. The defective/damaged product(s) must be received by EBTRON within 10 working days after customer receipt of the replacement product(s) or the service will be considered non-warranty.
6. The equipment will be inspected based upon the condition at arrival at the EBTRON factory to determine cause of damage (warranty or non-warranty). The customer should properly package and insure the equipment in case of shipping loss or damage. Product(s) damaged in shipment will void any warranty claim.
7. If the damage is deemed to be warranty, the contingency purchase order will be destroyed and the return shipping charge will be paid by EBTRON. If the damage is deemed to be non-warranty, the customer will be invoiced for the complete cost of all advance replacement product(s) they received and the associated shipping charges regardless of repair required if the product was returned for Standard Factory Repair Service.

6.6.2. Standard Factory Repair Service

The customer returns the defective damaged products to the EBTRON factory for inspection and/or repair. The Standard Factory Repair Service Policy is described below.

Standard Factory Service Policy

1. The customer must perform basic field diagnostics as requested by EBTRON Customer Service to determine which product component(s) is/are defective/damaged. Once approved, a return merchandise authorization number (RMA#) will be assigned so that the defective/damaged product(s) can be returned to EBTRON by the customer at the customer's expense.
2. The equipment will be inspected based upon the condition at arrival at the EBTRON factory to determine cause of damage (warranty or non-warranty). The customer should properly package and insure the equipment in case of shipping loss or damage. Product(s) damaged in shipment will void any warranty claim.
3. If non-warranty repairs are required after inspection, the customer will be contacted with a cost estimate for the repair. The customer must provide a purchase order for the non-warranty repairs to initiate the repair process.
4. Most repairs, warranty and non-warranty will be performed in one week of receipt of the product (warranty) and one week of receipt of the repair purchase order (non-warranty). Exceptions include large or special service requests that will be handled on a case-by-case basis.
5. If the damage is deemed to be warranty, the product(s) will be shipped in the same manner it was received by the customer and the return shipping charge will be paid by EBTRON. If the damage is deemed to be non-warranty, the customer will be invoiced for the repair and the associated shipping charges based on the customer's shipping instructions.

EBTRON, Inc • 1663 Hwy 701 S., Loris, SC 29569 • Toll Free: 800-2EBTRON (232-8766) • Fax: 843-756-1838 • EBTRON.com

6.6.3. Other Service Options

If the EBTRON Advance Replacement or Standard Factory Service options do not meet your needs, field service and/or replacement product(s) can be obtained/purchased directly from your local EBTRON representative.

For the name and phone number of your local EBTRON representative visit us online at https://ebtron.com/. Click on the REP FINDER button on the top right side of the page.

EBTRON, Inc • 1663 Hwy 701 S., Loris, SC 29569 • Toll Free: 800-2EBTRON (232-8766) • Fax: 843-756-1838 • EBTRON.com

Appendix A

Placement

Guidelines

A. OVERVIEW

This document provides guidelines for the proper placement of Advantage IV and *EB-Flow2* duct and plenum mounted probes.

A.1. DESIGN CONSIDERATIONS

A.1.1. Installed vs. Laboratory Accuracy

The actual “installed accuracy” rather than “laboratory accuracy” is most important for overall system performance in real-world applications. As a result, EBTRON states field measurement performance expectations in terms of “installed accuracy”.

The installed accuracy is the expected accuracy at the measurement location and includes the sensor node error (sensor accuracy) stated in the model’s technical specification plus the expected field sampling error (additional inaccuracy that should be added to the sensor accuracy) that results from having a finite number of sensors across the sensing plane. Most instrumentation manufacturers ignore the sampling error, however, all multi-point sensing devices (airflow, temperature, humidity, etc.) have an error that results from the variable measurement profile across the plane where the sensor nodes are located.

⚠ *These guidelines are based on using EBTRON independently calibrated and processed thermal dispersion devices. Performance may vary on other thermal devices and/or measurement technologies.*

ⓘ *If minimum placement guidelines cannot be achieved, installed accuracy may be compromised. Transmitters can be field adjusted to match a third-party measurement. Adjusted field measurements typically result in comparative readings within ±3% of the third-party measurement. Be advised that the third-party measurement may have uncertainties greater than or equal to ±10% (often greater on close-coupled outdoor air intakes) and should only be used to adjust the airflow measurement device if the probes do not meet minimum placement requirements and the discrepancy is greater than the uncertainty of the third-party source.*

A.1.2. Duct Mounted Systems

Ducted measurement results in the most predictable performance and best installed accuracy compared to non-ducted or fan inlet measurement.

Duct mounting is typically applied to supply, return, relief, and outdoor air intake paths that have one or more equivalent duct diameter of straight run to locate the probes in. Close-coupled outdoor air intakes are discussed in the next section.

Installed accuracy expectations can vary depending on the model and sensor density. For example, high sensor density -PC and -P+ density probe types, and -T probe types (smaller round ducts), can achieve an installed accuracy of ±3% of reading in ducts when placement guidelines are followed. Lower sensor density -P probe types (-PE, -PB, -PA or custom) and -U probe types may have a lesser installed accuracy in the same measurement location as the -PC or -P+ densities, although all could perform similarly in a laboratory test tunnel having a minimal velocity profile.

EBTRON, Inc • 1663 Hwy 701 S., Loris, SC 29569 • Toll Free: 800-2EBTRON (232-8766) • Fax: 843-756-1838 • EBTRON.com

A.1.3. Close-coupled Outdoor Air Intakes (CCOAI)

Close-coupled louver (or hood) and damper outdoor air intakes are perhaps the most challenging of all airflow measurement applications since both the upstream louver (or hood) and downstream damper can cause extreme velocity profiles and turbulence. These applications are most prevalent on recirculating air handling systems where an alternate path is not available to determine the outdoor airflow rate.

Locate probes on the discharge side of DOAS intake fan systems whenever possible.

Many air handling units have insufficient space in the outdoor air intake path to ensure accurate airflow measurement as a result of equipment footprint constraints. These constraints often result in a nonuniform velocity profile with extremely low airflow rates (less than 200 FPM). Dampers are often poor quality, oversized, and unable to modulate to control the design airflow rate. The use of parallel blade dampers to improve mixing adds to control instability in many applications. As a result, the highest performance airflow measurement equipment should be selected for the direct measurement of outdoor air intake flow rates.

Accurate measurement of outdoor air intake flow rates requires the following:

a) An adequate distance upstream of the damper is provided to avoid damper interaction (i.e., the damper position does not significantly affect the measurement of airflow).
b) An adequate distance downstream of the louver (or hood) is provided for the airflow to become partially developed.
c) The fan system does not create turbulence in the mixing box or eject recirculated air out of the outdoor air intake (too much return air).
d) The airflow rates are high enough not to be affected by transient wind gusts.
e) The airflow measurement device provided can measure the airflow rates over the entire operating range of the application.

The design of close-coupled outdoor air intakes varies considerably from manufacturer to manufacturer of air-handling equipment. This variability makes it difficult to present a clear and concise, “one size fits all”, placement procedure. EBTRON application specialists review tens of thousands of applications annually and are available at 1-800-232-8766 to assist customers and provide placement recommendations.

A.1.3.1. EFFECT OF THE OUTDOOR AIR INTAKE DAMPER ON MEASUREMENT

EBTRON testing indicates that minimal damper interaction measurement error results when the AMD is located one damper blade width upstream of the leading edge of a fully open, fully modulating, outdoor air intake damper. Test data is shown in Figures A-1 and A-2.

A lower airflow limit of 150 FPM is suggested so that transient wind gusts do not result in false readings in close-coupled applications. It is also recommended as the minimum velocity for effective control of modulating intake damper. IT IS NOT A LIMITATION OF THE EBTRON AIRFLOW MEASUREMENT DEVICE that can read down to still air (i.e., 0 FPM)

Provide a separate minimum intake damper, if possible, if the minimum airflow rate falls below 150 FPM.

Do not apply this data to other technologies, including pitot array and other thermal dispersion devices. EBTRON thermal dispersion technology was specifically designed to perform in close-coupled outdoor air intake applications.

Do not install the airflow measurement device downstream of a modulating or partially open damper!

EBTRON, Inc • 1663 Hwy 701 S., Loris, SC 29569 • Toll Free: 800-2EBTRON (232-8766) • Fax: 843-756-1838 • EBTRON.com

Figure A-1 – 6” Opposed Blade Damper

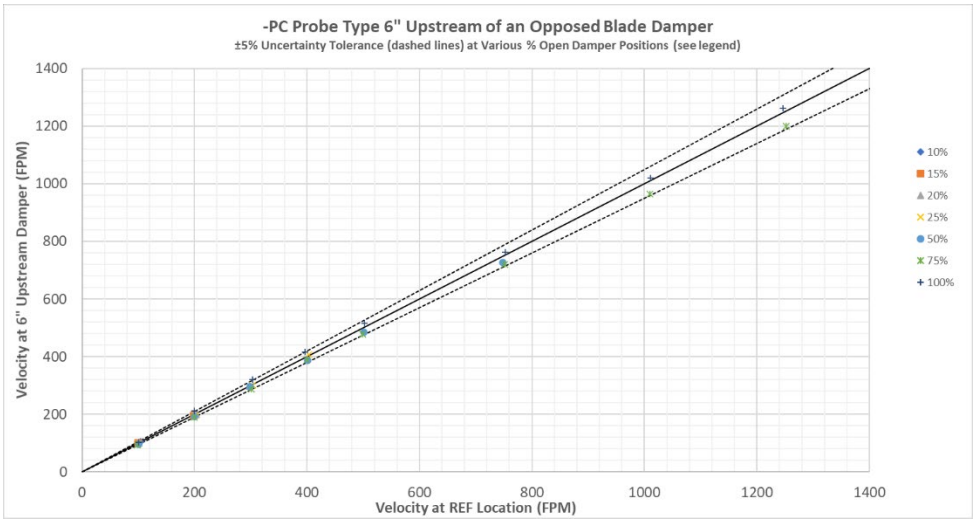

Figure A-2 – 6” Parallel Blade Damper

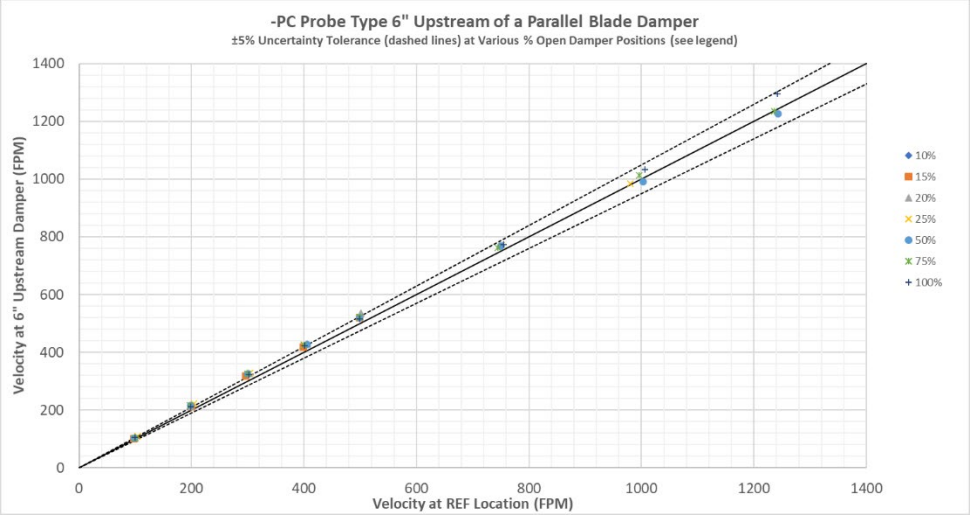

A.1.3.2. EFFECT OF INTAKE LOUVERS ON MEASUREMENT

An installed accuracy of ±5% of reading or better can be achieved without field adjustment using either -P+ or -PC sensor density probes mounted downstream of an intake louver when the minimum distance and airflow rates indicated in Table A-1 are met or exceeded.

Louver design is extremely variable. Louver blades create significant blockage and turbulence that can adversely affect measurement accuracy. Table A-1 breaks down louvers into three general categories:

- Stationary Louvers: ≥ 6-inch blade width
- Stationary Louvers: <6-inch blade width
- Hurricane/Rain Louvers

A.1.3.2.1. Stationary Louvers: ≥ 6-inch blade width

This category of louvers is the most common and most predictable for airflow measurement accuracy. This type of louver is most “transparent” and typically result in the best installed accuracy when leading manufacturers performance louvers are provided, even in close-coupled applications.

EBTRON, Inc • 1663 Hwy 701 S., Loris, SC 29569 • Toll Free: 800-2EBTRON (232-8766) • Fax: 843-756-1838 • EBTRON.com

A.1.3.2.2. Stationary Louvers: < 6-inch blade width

This category of louvers is less predictable for airflow measurement accuracy since the free area is typically less than that of 6-inch louvers. The smaller blade size results in an increase in the number of fixed blades, thus resulting in more blockage and turbulence. The downstream distance required is greater than that of the 6-inch blade type for equal performance.

A.1.3.2.3. Hurricane/Rain Louvers

Hurricane, rain, and other high-performance specialty louvers are the least predictable for airflow measurement accuracy and often results in excessive blockage and turbulence. The downstream distance required is greater than that of the 6-inch blade type for equal performance. In many cases, field adjustment may be required.

A.1.3.3. EFFECT OF HOODS ON MEASUREMENT

Intake hood applications include both straight-through and radiused/angled hood types.

A.1.3.3.1. Straight-through Hoods

As a general rule-of-thumb, probes mounted in straight-through hoods have a better installed accuracy than angled or radiused hoods.

A.1.3.3.2. Angled (or Radiused) Hoods

Addition of an extension sleeve to a angled or radiused hood can improve the installed accuracy in some applications. However, field modifications are costly, and the actual benefit is difficult to predict. As a result, Table A-1 shows the expected installed accuracy, without field adjustment, for various hood configurations of angled and radiused hoods.

A.2. LOCATING PROBES (DUCTED SYSTEMS & CCOAI)

Step 1 - Determine the pressure relationship relative to the primary fan.

Determine which side of the primary fan the probe(s) will be mounted to establish whether it is a positive or negative pressure location relative to the air movement source. If the location is upstream (before) of a fan, the pressure relationship is typically negative, if it is downstream (after) of a fan, the pressure relationship is typically positive. In cases where the probes are located between two fans (examples: recirculated air or relief air), use your best judgement to determine the fan that is creating the primary air movement to determine the pressure relationship or contact EBTRON or your local representative.

Figure A-3 – Pressure Relationship Relative to Fan

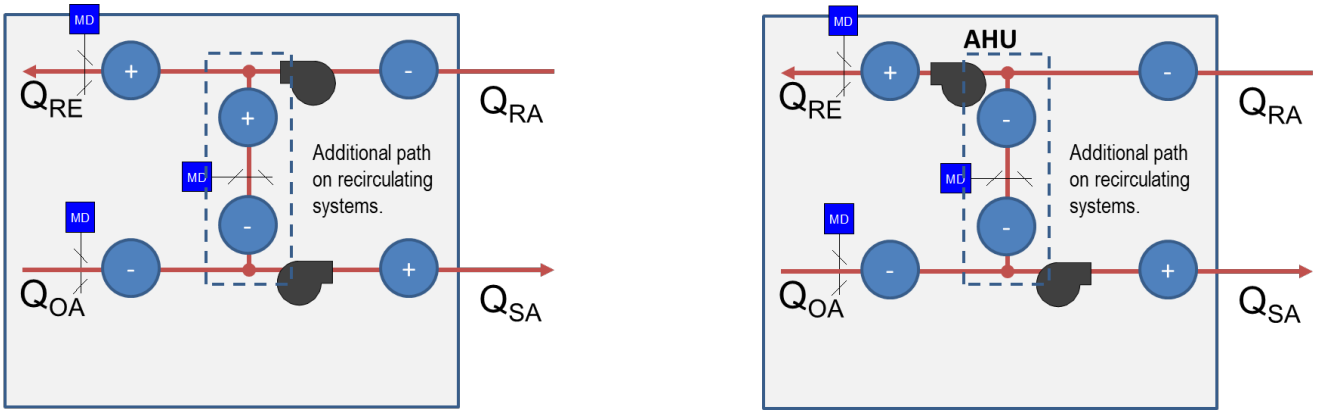

EBTRON, Inc • 1663 Hwy 701 S., Loris, SC 29569 • Toll Free: 800-2EBTRON (232-8766) • Fax: 843-756-1838 • EBTRON.com

Step 2 - Locate the immediate downstream disturbance in Table A-1.

Typical disturbances are found in Table A-1. Navigate vertically through the table to the immediate downstream disturbance at the measurement location you are considering. If the disturbance is not listed, contact EBTRON or your local representative.

Step 3 - Determine the corresponding figure for the downstream disturbance.

Once the downstream disturbance has been identified in Table A-1, navigate horizontally across the table to find the appropriate column based on the pressure relationship relative to the primary fan for the downstream dimension "Y". The leftmost item in the column is the *Figure ID*. Determine the *Figure ID* and locate the corresponding figure in Table A-2 and note the reference point where the measurement is taken from.

Step 4 - Determine the minimum distance "Y" from the downstream disturbance.

Use Table A-1 to determine Y_{min} and Y_{calc}.

Y_{min} is a fixed value located in Table A-1 to the immediate right of the *Figure ID* for the *Disturbance* and *PRESSURE SIDE OF FAN* selected.

Y_{calc} is based on a multiple of the simple equivalent duct diameter, D, located in Table A-1 to the immediate right of Y_{min}, where,

$$D = (\text{Duct Width} + \text{Duct Height}) / 2 \qquad \text{(eq. A-1)}$$

and,

$$Y_{calc} = \textit{Multiplier} \cdot D \qquad \text{(eq. A-2)}$$

The value for "Y" is the greater of Y_{min} and Y_{calc}.

ⓘ *If there is no entry in Table A-1 for Y_{calc}, the value for "Y" is equal to Y_{min}.*

Steps 5 to 9 apply to Ducted applications and CCOAI Louver and Straight-through hood applications only. Skip to Step 5R for CCOAI Radius/Angle Hood applications.

Step 5 - Locate the immediate upstream disturbance in Table A-1.

Navigate vertically through the table to the immediate upstream disturbance at the measurement location you are considering. If the disturbance is not listed, contact EBTRON or your local representative.

Step 6 - Determine the corresponding figure for the upstream disturbance.

Once the upstream disturbance has been identified in Table A-1, navigate horizontally across the table to find the appropriate column based on the pressure relationship relative to the primary fan for the upstream dimension "X". The leftmost item in the column is the *Figure ID*. Determine the *Figure ID* and locate the corresponding figure in Table A-2 and note the reference point where the measurement is taken from.

Step 7 - Determine the minimum distance "X" from the upstream disturbance.

Use Table A-1 to determine X_{min} and X_{calc}.

X_{min} is a fixed value located in Table A-1 to the immediate right of the *Figure ID* for the *Disturbance* and *PRESSURE SIDE OF FAN* selected.

X_{calc} is based on a multiple of the simple equivalent duct diameter, D, located in Table A-1 to the immediate right of X_{min}, where D is equal to the same value calculated in Step 4 (eq. A-1) and,

EBTRON, Inc • 1663 Hwy 701 S., Loris, SC 29569 • Toll Free: 800-2EBTRON (232-8766) • Fax: 843-756-1838 • EBTRON.com

X_{calc} = *Multiplier* · D (eq. A-3)

The value for "X" is the greater of X_{min} and X_{calc}.

ⓘ *If there is no entry in Table A-1 for X_{calc}, the value for "X" is equal to X_{min}.*

Step 8 – Determine the distance "Z" between disturbances and the ideal location distance "L" from the upstream disturbance.

Refer to Figure A-4 and use the up and downstream figures in Table A-2 to determine the starting and ending reference points to determine the distance Z between the up and downstream disturbances.

Calculate the ideal distance "L" from the upstream disturbance:

L = X / (X+Y) ·Z (eq. A-4)

Figure A-4

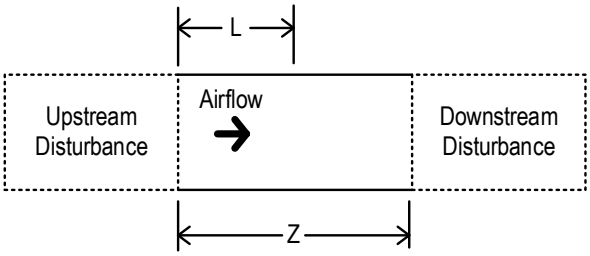

Step 9 – Locate Probes.

The distance "Z" between disturbances satisfies one of the following conditions:

- Z is greater than or equal to X+Y
- Z is less than X+Y

Choose the appropriate condition below to locate the probes,

"Z" is Greater than or Equal to X+Y

If Z is greater than or equal to X+Y, the location meets or exceeds the minimum placement guidelines, and the expected installed accuracy should result when the probe(s) are located anywhere inside of the *Acceptable Area* box shown in Figure A-5 (or distance L, when Z=X+Y). FIELD ADJUSTMENT IS NOT RECOMMENDED.

Locate the probes as close to the ideal location, distance "L" as possible to achieve the best installed accuracy.

Figure A-5

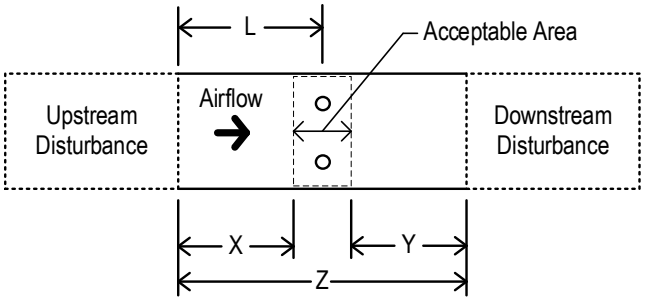

EBTRON, Inc • 1663 Hwy 701 S., Loris, SC 29569 • Toll Free: 800-2EBTRON (232-8766) • Fax: 843-756-1838 • EBTRON.com

"Z" is Less Than X+Y (Ducted Applications Only)

If Z is less than X+Y, the location DOES NOT meet the minimum placement guidelines and the expected installed accuracy cannot be predicted. An alternate location is recommended. If an alternate location is not available, locate the probes distance "L" from the upstream disturbance shown in Figure A-6.

ⓘ *CCOAI Louver and Straight-through Hood applications that do not meet placement guidelines require special consideration. Refer to CCOAI Louver Straight-through Hood Applications below.*

ⓘ *If minimum placement guidelines cannot be achieved, installed accuracy may be compromised. Transmitters can be field adjusted to match a third-party measurement (made in a better location). Adjusted field measurements typically result in comparative readings within ±3% of the third-party measurement. Be advised that the third-party measurement may have uncertainties greater than or equal to ±10% and should only be used to adjust the airflow measurement device if the probes do not meet minimum placement requirements and the discrepancy is greater than the uncertainty of the third-party source.*

⚠ *Sensor probes located downstream of a modulating damper that do not meet placement guidelines may not be repeatable or accurate when the damper modulates, even if adjusted to match a third-party measurement. Do not install the airflow measurement device downstream of a modulating damper!*

Figure A-6

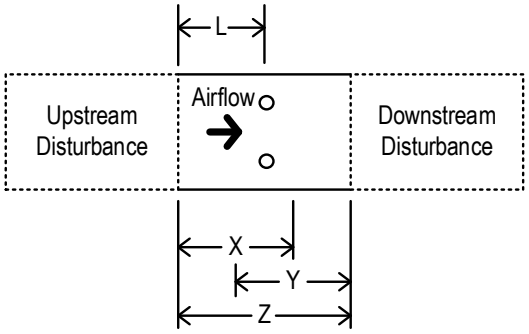

"Z" is Less Than X+Y (CCOAI Louver and Straight-through Hood Applications)

If Z is less than X+Y, the location DOES NOT meet the minimum placement guidelines and the expected installed accuracy cannot be predicted. Recalculate distance "L" using equation A-5 and locate the probes distance "L" from the upstream disturbance shown in Figure A-7 to avoid damper interaction error on the measurement.

$$L = Z - Y \qquad \text{(eq. A-5)}$$

Figure A-7

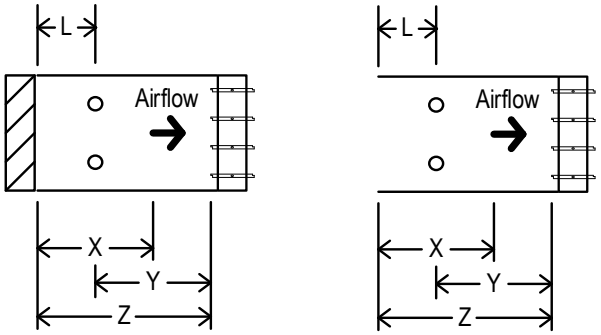

EBTRON, Inc • 1663 Hwy 701 S., Loris, SC 29569 • Toll Free: 800-2EBTRON (232-8766) • Fax: 843-756-1838 • EBTRON.com

ⓘ *If minimum placement guidelines cannot be achieved, installed accuracy may be compromised. Transmitters can be field adjusted to match a third-party measurement (made in a better location). Adjusted field measurements typically result in comparative readings within ±3% of the third-party measurement. Be advised that the third-party measurement on CCOAI intakes may have uncertainties greater than or equal to ±25% and should only be used to adjust the airflow measurement device if the probes do not meet minimum placement requirements and the discrepancy is greater than the uncertainty of the third-party source.*

⚠ *Do not install the airflow measurement device downstream of a modulating or partially open damper!*

Steps 5R to 9R apply to CCOAI Radius/Angle Hood applications only.

Step 5R - Locate "Outdoor Air Intake Hoods" in Table A-1.

Step 6R - Determine the corresponding figure for the hood.

Determine the *Figure ID* and locate the corresponding figure in Table A-2. Note that the measurement is taken from the trailing edge of the radius hood.

Step 7R – Determine the distance "Z" between the hood and the outdoor air intake damper.

Refer to Figure A-8 to determine the distance Z between the downstream side of the hood and the leading edge of the fully open outdoor air intake damper.

Figure A-8

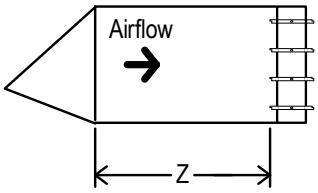

Step 8R – Determine the distance "X"

Calculate the distance "X":

$$X = Z - Y \qquad \text{(eq. A-6)}$$

ⓘ *X may be less than 0.*

Figure A-9

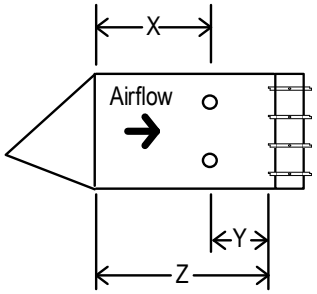

EBTRON, Inc • 1663 Hwy 701 S., Loris, SC 29569 • Toll Free: 800-2EBTRON (232-8766) • Fax: 843-756-1838 • EBTRON.com

Step 9R – Locate Probes.

Radius/Angle Hood applications are based on expected installed accuracy, without field adjustment, rather than minimum placement requirements to meet a single, expected installed accuracy. Locate probes distance "Y" upstream of the fully open outdoor air intake damper. Expected installed accuracy is as follows based on the distance "X" available:

Distance "X"	Expected Installed Accuracy without Adjustment
X > 12 in. [305 mm]	Better than or equal to ±5% of Reading
6" [153 mm] ≤ X < 12" [305 mm]	Better than or equal to ±10% of Reading
X < 6 in. [153 mm]	Better than or equal to ±15% of Reading (Installation in hood may be required)

Transmitters can be field adjusted to match a third-party measurement (made in a better location). Adjusted field measurements typically result in comparative readings within ±3% of the third-party measurement. Be advised that the third-party measurement on CCOAI intakes may have uncertainties greater than or equal to ±25% and should only be used to adjust the airflow measurement device if the discrepancy is greater than the uncertainty of the third-party source.

Addition of a sleeve between the hood and damper typically improves the installed accuracy.

Make sure that a screen (if provided) does not interfere with probe placement!

Do not install the airflow measurement device downstream of a modulating or partially open damper!

A.3. FOR MORE INFORMATION …

For toll-free factory support call 800-2EBTRON (232-8766), Monday through Thursday 8:00 AM to 4:30 PM and Friday 8:00 AM to 2:00 PM eastern time or contact your local representative.

EBTRON, Inc • 1663 Hwy 701 S., Loris, SC 29569 • Toll Free: 800-2EBTRON (232-8766) • Fax: 843-756-1838 • EBTRON.com

TABLE A-1 SUGGESTED MINIMUM DISTANCES FROM UP AND DOWNSTREAM DISTURBANCES [1,2,3]

[1] This table is based on the immediate up and downstream disturbances and should be used as a guide. Additional nearby obstructions should be considered prior to selecting a location.

[2] Call EBTRON at 800-232-8766 for disturbances not shown or for product application assistance.

[3] Place the AMD beyond the absorption distance of humidifiers, evaporative coolers and other sources of water condensate.

RELATIONSHIP TO FAN →	**POSITIVE PRESSURE SIDE OF FAN**						**NEGATIVE PRESSURE SIDE OF FAN**					
Disturbance Location Relative to AMD →	**Upstream**			**Downstream**			**Upstream**			**Downstream**		
Choose greater of Xmin or Xcalc,	**Figure**	**X**		**Figure**	**Y**		**Figure**	**X**		**Figure**	**Y**	
where D = (Width+Height)/2 →		**Xmin**	**Xcalc**		**Ymin**	**Ycalc**		**Xmin**	**Xcalc**		**Ymin**	**Ycalc**
Disturbance ↓												
Air Cleaners												
Filter (pleated)	A-X-01	24" [610 mm]		A-Y-01	6" [153 mm]		A-X-01	18" [458 mm]		A-Y-01	6" [153 mm]	
Filter (roll)	A-X-02	12" [305 mm]		A-Y-02	6" [153 mm]		A-X-02	12" [305 mm]		A-Y-02	6" [153 mm]	
Coils and Heaters												
H/W Coil	C-X-01	18" [458 mm]		C-Y-01	6" [153 mm]		C-X-01	18" [458 mm]		C-Y-01	6" [153 mm]	
C/W Coil	C-X-01	18" [458 mm]		C-Y-01	6" [153 mm]		C-X-01	18" [458 mm]		C-Y-01	6" [153 mm]	
Electric Heater	C-X-02			C-Y-02	Call EBTRON		C-X-02			C-Y-02		
Dampers[4]												
Ducted (Modulating)	D-X-01			D-Y-01	9" [229 mm][5]	0.75D[5]	D-X-01	Call EBTRON		D-Y-01	9" [229 mm]	0.75D
Ducted (2-position, Open/Closed)	D-X-01	20" [508 mm]		D-Y-01	10" [254 mm][5]		D-X-01	20" [508 mm]		D-Y-01	10" [254 mm]	
Outdoor Air Intake												
≤1,250 FPM [6.35 m/s]		NA			NA		D-X-01	Call EBTRON		D-Y-01	6" [153 mm][6]	
>1,250 FPM [6.35 m/s]		NA			NA		D-X-01	Call EBTRON			Call EBTRON	

[4] Distances are from the leading edge of a fully open damper blade when the damper is located downstream of the AMD and the trailing edge of when the AMD is located upstream.

[5] The AMD may provide false readings as the damper approaches the closed position due to turbulence at the measurement location.

[6] X_{min} = Damper Blade Width

Elbows												
Elbow (no turning vanes)	E-X-01	36" [915 mm]	3D	E-Y-01	18" [458 mm]	1.5D	E-X-01	36" [915 mm]	3D	E-Y-01	18" [458 mm]	1.5D
Elbow (turning vanes)	E-X-02	9" [229 mm]	0.75D	E-Y-02	9" [229 mm]	0.75D	E-X-02	9" [229 mm]	0.75D	E-Y-02	9" [229 mm]	0.75D
Elbow (radius or sweep)	E-X-03	21" [534 mm]	1.75D	E-Y-03	21" [534 mm]	1.75D	E-X-03	21" [534 mm]	1.75D	E-Y-03	21" [534 mm]	1.75D
Exhaust Louvers												
Backdraft		NA		L-Y-01	30" [762 mm]			NA			NA	
Stationary		NA		L-Y-01	18" [458 mm]			NA			NA	
Fans (Ducted)												
Centrifugal Fan	F-X-01	24" [610 mm]	2D		NA			NA		F-Y-01	12" [305 mm]	1D
Vane Axial Fan	F-X-02	24" [610 mm]	2D		NA			NA		F-Y-02	12" [305 mm]	1D

RELATIONSHIP TO FAN →	POSITIVE PRESSURE SIDE OF FAN						NEGATIVE PRESSURE SIDE OF FAN					
Disturbance Location Relative to AMD →	Upstream			Downstream			Upstream			Downstream		
Choose greater of Xmin or Xcalc,	Figure	X		Figure	Y		Figure	X		Figure	Y	
where D = (Width+Height)/2 →		Xmin	Xcalc		Ymin	Ycalc		Xmin	Xcalc		Ymin	Ycalc
Disturbance ↓												
Fan Plenums												
Plenum to Duct	P-X-01	18" [458 mm]	1.5D	NA			NA			NA		
Duct to Plenum	NA			NA			NA			P-Y-01	12" [305 mm]	1D
Outdoor Air Intake Hoods												
Angled (or Radiused) Hoods												
Installed Accuracy (without adjustment)												
≤ ±15%	NA			NA			H-X-01	0" [0 mm][7]		NA		
≤ ±10%	NA			NA			H-X-01	6" [153 mm]		NA		
≤ ±5%	NA			NA			H-X-01	12" [305 mm]		NA		
[7] Install in Hood												
Straight Through Hoods	NA			NA			H-X-02	12" [305 mm]		NA		
Outdoor Air Intake Louvers[8]												
Hurricane/Rain Louvers												
<500 FPM [2.5 m/s]	NA			NA			L-X-01	18" [458 mm]		NA		
500 to 1,250 FPM [2.5 to 6.35 m/s]	NA			NA			L-X-01	24" [610 mm]		NA		
>1,250 FPM [6.35 m/s]	NA			NA			L-X-01	36" [915 mm]		NA		
Stationary Louvers < 6" [152 mm]												
<500 FPM [2.5 m/s]	NA			NA			L-X-01	18" [458 mm]		NA		
500 to 1,250 FPM [2.5 to 6.35 m/s]	NA			NA			L-X-01	24" [610 mm]		NA		
>1,250 FPM [6.35 m/s]	NA			NA			L-X-01	36" [915 mm]		NA		
Stationary Louvers - ≥ 6" [152 mm]												
<500 FPM [2.5 m/s]	NA			NA			L-X-01	12" [305 mm]		NA		
500 to 1,250 FPM [2.5 to 6.35 m/s]	NA			NA			L-X-01	18" [458 mm]		NA		
>1,250 FPM [6.35 m/s]	NA			NA			L-X-01	24" [610 mm]		NA		
[8] The expected accuracy can not be predicted if the AMD is located closer to the louver than suggested. Field adjustment may be required.												

RELATIONSHIP TO FAN →	POSITIVE PRESSURE SIDE OF FAN						NEGATIVE PRESSURE SIDE OF FAN					
Disturbance Location Relative to AMD →	Upstream			Downstream			Upstream			Downstream		
Choose greater of Xmin or Xcalc,	Figure	X		Figure	Y		Figure	X		Figure	Y	
where D = (Width+Height)/2 →		Xmin	Xcalc		Ymin	Ycalc		Xmin	Xcalc		Ymin	Ycalc
Disturbance ↓												
Outdoor Air Intake Plenum to Duct[9]												
<500 FPM [2.5 m/s]	NA			NA			P-X-01	6" [153 mm]		NA		
500 to 1,250 FPM [2.5 to 6.35 m/s]	NA			NA			P-X-01	12" [305 mm]		NA		
>1,250 FPM [6.35 m/s]	NA			NA			P-X-01	18" [458 mm]		NA		
[9] Maintain louver or hood minimum distance requirements to probe.												
T Fittings												
T Main Duct (no turning vanes)	T-X-01	12" [305 mm]	1D	T-Y-01	6" [153 mm]	0.5D	T-X-02	18" [458 mm]	1.5D	T-Y-02	6" [153 mm]	0.5D
T Main Duct (turning vanes)	T-X-03	18" [458 mm]	1.5D	T-Y-03	6" [153 mm]	0.5D	T-X-04	12" [305 mm]	1D	T-Y-04	6" [153 mm]	0.5D
T Branch Duct (no turning vanes)	T-X-05	36" [915 mm]	3D	NA			NA			T-Y-05	12" [305 mm]	1D
T Branch Duct (turning vanes)	T-X-06	18" [458 mm]	1.5D	NA			NA			T-Y-06	12" [305 mm]	1D
Terminal T (no turning vanes)	T-X-07	36" [915 mm]	3D	T-Y-07	12" [305 mm]	1D	T-X-07	24" [610 mm]	2D	T-Y-07	6" [153 mm]	0.5D
Terminal T (turning vanes)	T-X-08	18" [458 mm]	1.5D	T-Y-08	9" [229 mm]	0.75D	T-X-08	12" [305 mm]	1D	T-Y-08	6" [153 mm]	0.5D
Transitions												
Reducing Transition	Z-X-01	6" [153 mm]	0.5D	Z-Y-01	6" [153 mm]	0.5D	Z-X-01	6" [153 mm]	0.5D	Z-Y-01	6" [153 mm]	0.5D
Expanding Transition	Z-X-02	18" [458mm]	1.5D	Z-Y-02	6" [153 mm]	0.5D	Z-X-02	18" [458 mm]	1.5D	Z-Y-02	6" [153 mm]	0.5D

TABLE A-2 PLACEMENT FIGURES – DUCTS AND PLENUMS

Fig. ID: A-X-01

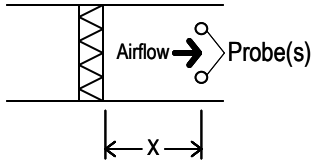

Filter (Pleated)

Fig. ID: A-Y-01

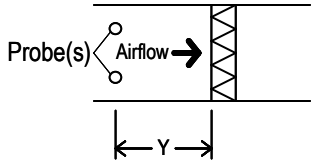

Filter (Pleated)

Fig. ID: A-X-02

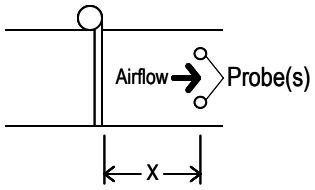

Filter (Roll)

Fig. ID: A-Y-02

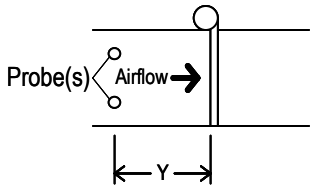

Filter (Roll)

Fig. ID: C-X-01

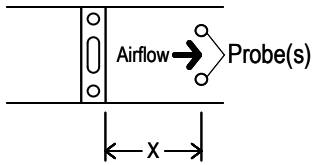

Coil

Fig. ID: C-Y-01

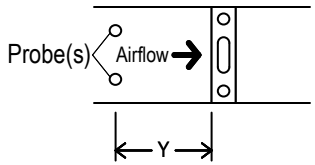

Coil

Fig. ID: C-X-02

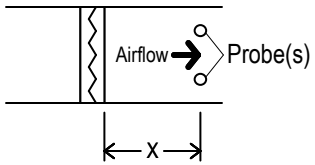

Electric Heater

Fig. ID: C-Y-02

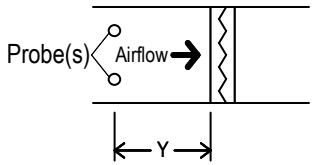

Electric Heater

Fig. ID: D-X-01

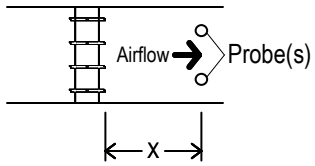

Damper

Fig. ID: D-Y-01

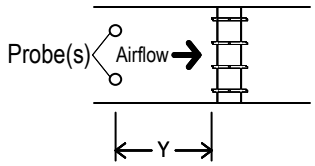

Damper

Fig. ID: E-X-01

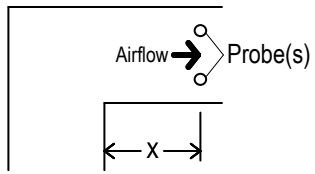

Elbow (no turning vanes)

Fig. ID: E-Y-01

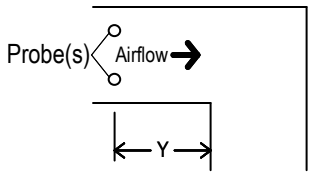

Elbow (no turning vanes)

Fig. ID: E-X-02

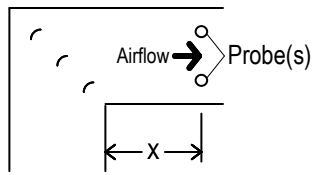

Elbow (turning vanes)

Fig. ID: E-Y-02

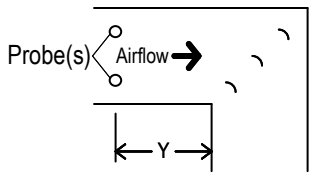

Elbow (turning vanes)

Fig. ID: E-X-03

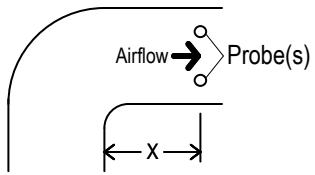

Elbow (radius)

Fig. ID: E-Y-03

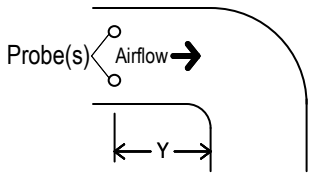

Elbow (radius)

TABLE A-2 PLACEMENT FIGURES – DUCTS AND PLENUMS

Fig. ID: F-X-01 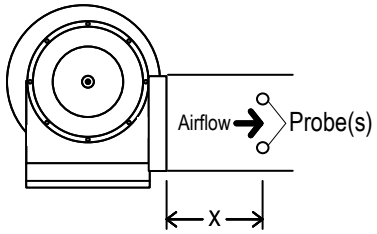 Centrifugal Fan	Fig. ID: F-Y-01 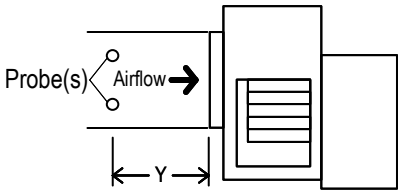 Centrifugal Fan	Fig. ID: F-X-02 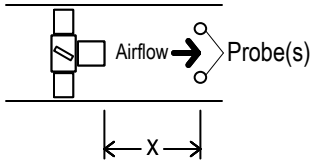 Vane Axial Fan	Fig. ID: F-Y-02 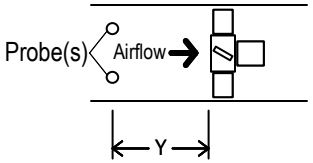 Vane Axial Fan
Fig. ID: L-X-01 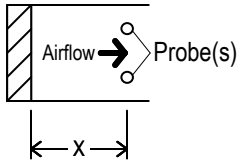 Louver	Fig. ID: L-Y-01 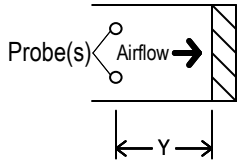 Louver	Fig. ID: H-X-01 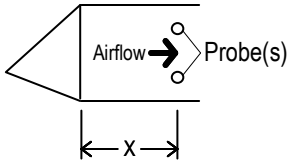 Hood – Angled (or Radiused)	Fig. ID: H-X-02 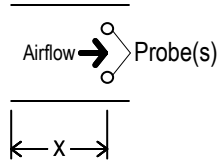 Hood – Straight Through
Fig. ID: P-X-01 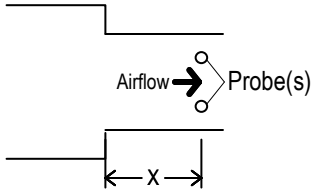 Plenum to Duct	Fig. ID: P-Y-01 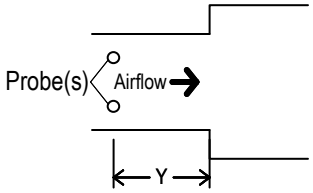 Duct to Plenum	Fig. ID: T-X-01 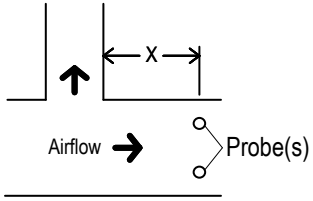 T Main Duct (no turning vanes)	Fig. ID: T-Y-01 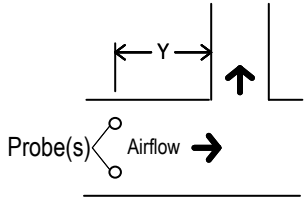 T Main Duct (no turning vanes)
Fig. ID: T-X-02 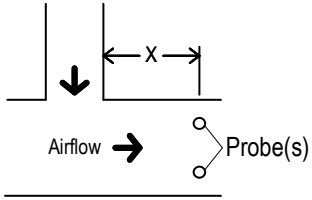 T Main Duct (no turning vanes)	Fig. ID: T-Y-02 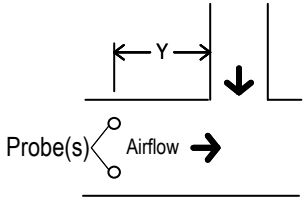 T Main Duct (no turning vanes)	Fig. ID: T-X-03 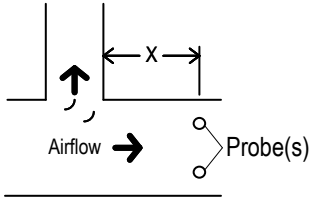 T Main Duct (turning vanes)	Fig. ID: T-Y-03 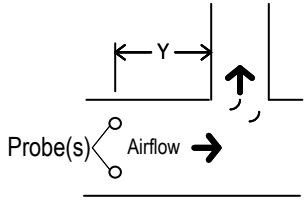 T Main Duct (turning vanes)

TABLE A-2 PLACEMENT FIGURES – DUCTS AND PLENUMS

Fig. ID: T-X-04

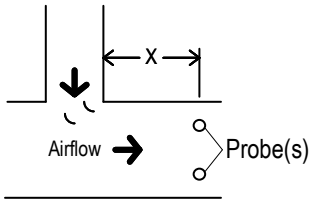

T Main Duct (turning vanes)

Fig. ID: T-Y-04

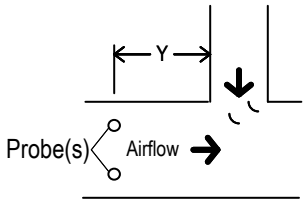

T Main Duct (turning vanes)

Fig. ID: T-X-05

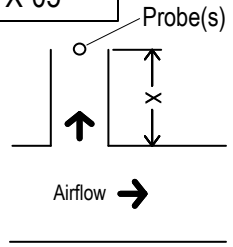

T Branch Duct (no turning vanes)

Fig. ID: T-Y-05

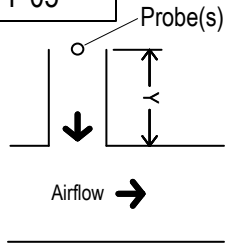

T Branch Duct (no turning vanes)

Fig. ID: T-X-06

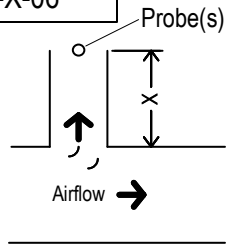

T Branch Duct (turning vanes)

Fig. ID: T-Y-06

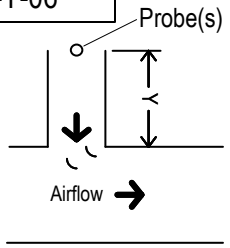

T Branch Duct (turning vanes)

Fig. ID: T-X-07

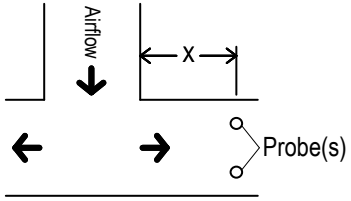

Terminal T (no turning vanes)

Fig. ID: T-Y-07

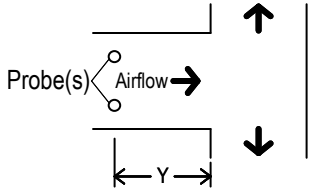

Terminal T (no turning vanes)

Fig. ID: T-X-08

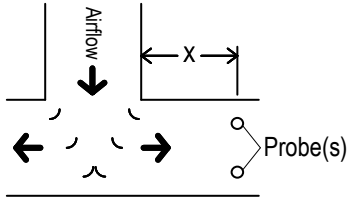

Terminal T (turning vanes)

Fig. ID: T-Y-08

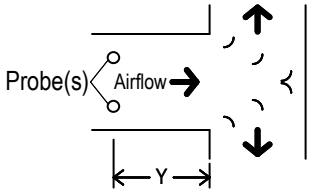

Terminal T (turning vanes)

Fig. ID: Z-X-01

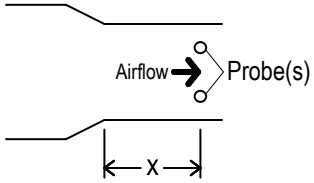

Reducing Transition

Fig. ID: Z-Y-01

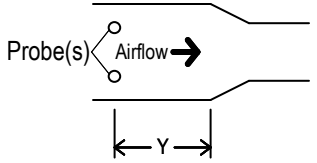

Reducing Transition

Fig. ID: Z-X-02

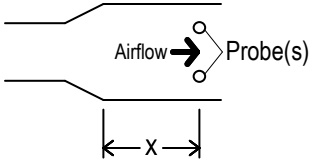

Expanding Transition

Fig. ID: Z-Y-02

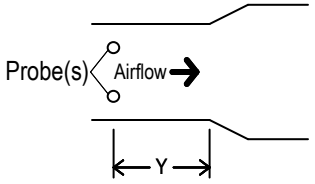

Expanding Transition

Appendix B

Sensor Probe Installation Guides

-P Probe Installation (Insertion Mounting - Rectangular Ducts)

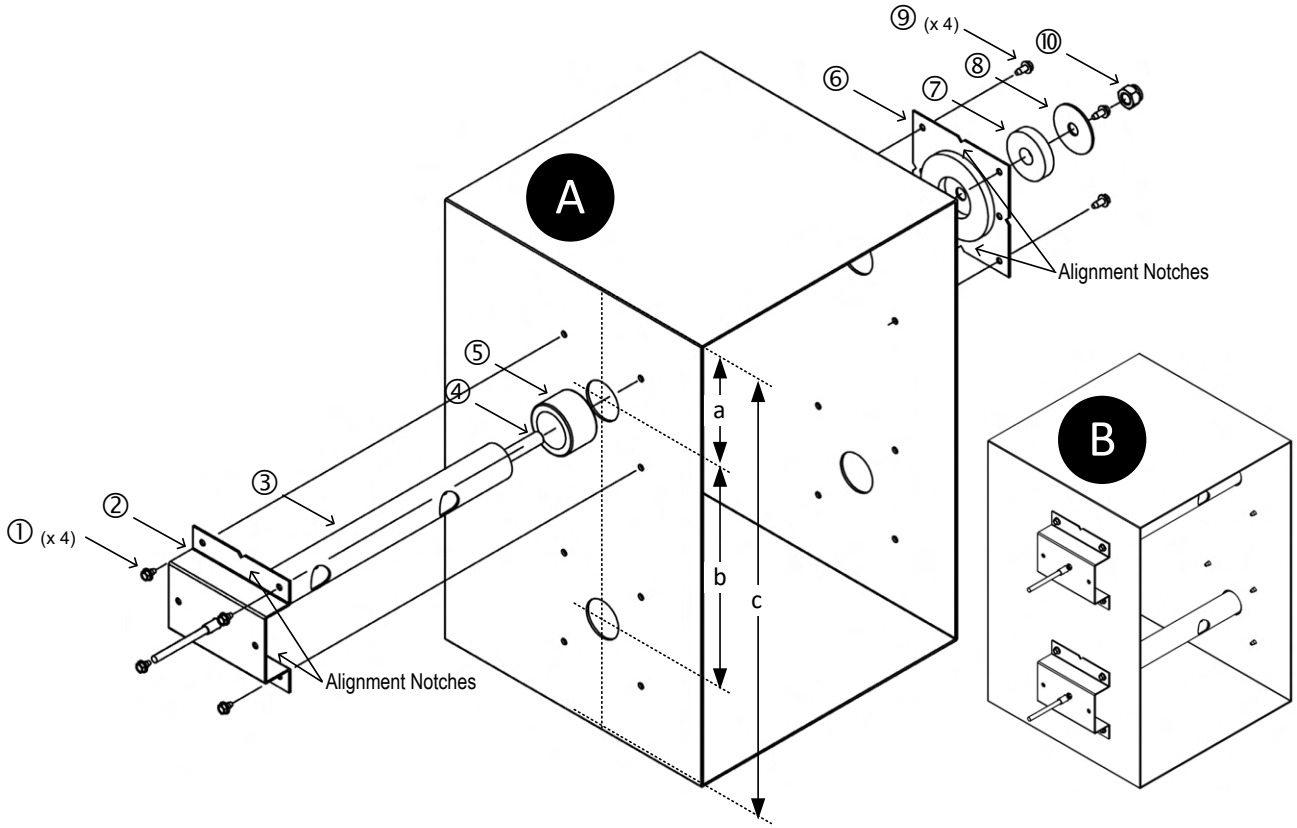

Step 1. Select a location in the duct or plenum opening that meets or exceeds EBTRON's recommended placement guidelines.

⚠ *If the location does not meet or exceed placement guidelines the installed accuracy may be compromised and field adjustment may be necessary.*

Step 2. Probes are ordered and labeled *Probe Length* x *Adjacent Side Length*. Probes are installed through the *Adjacent Side* dimension, 'c', of the duct. Verify that the duct size matches the size ordered.

⚠ *If the probe length ordered is incorrect, the sensors will not be located in the proper location, thus affecting the installed accuracy. Contact EBTRON customer service for more information.*

⚠ *If the actual size of the duct is not equal to the size ordered, the AREA parameter must be changed in the transmitter to display the proper airflow rate in CFM [l/s].*

⚠ *Do not cut the probe! Cutting the probe will void warranty.*

REFER TO FIGURE "A" WHEN COMPLETING STEPS 3 TO 22.

Step 3. Vertically mounted probes subject to water condensation or accumulation (typically supply air and outdoor air intakes) should be mounted so that the cable side of the probe is at the top of the duct.

Step 4. Draw a line on the outside of the duct side chosen as the insertion side that is perpendicular to the edge of the duct and the direction of airflow.

Use a carpenter's square or similar tool to ensure the probes are in the same plane and perpendicular to airflow.

EBTRON, Inc • 1663 Hwy 701 S., Loris, SC 29569 • Toll Free: 800-2EBTRON (232-8766) • Fax: 843-756-1838 • EBTRON.com

Step 5. Mark a center-point on the line drawn in Step 4 where each probe is located using the spacing guidelines indicated in Table 1. If more than two probes are provided, continue spacing additional probes at the 'b' interval from the previous probe.

TABLE 1 - PROBE PLACEMENT		
Number of Probes	a	b
1	c/2	
2	c/4	c/2
3	c/6	c/3
4	c/8	c/4

If the probes were ordered for a duct with internal insulation, use the internal dimension of the duct for 'c' to calculate 'a' and 'b', then add the internal insulation thickness to 'a'.

Step 6. Use the terminal mounting plate [⑥] as a template to locate the position for the four insertion mounting bracket screws [①]. Position the terminal mounting plate [⑥] on the duct with the foam gasket pointing away from the duct so that the center-point marked in Step 5 is in the center of the center-hole of the terminal mounting plate [⑥]. Position the terminal mounting plate [⑥] so that the center-line notches of the plate are aligned with the line drawn in Step 4. Mark the location of the four insertion mounting bracket screws [①] that secure each insertion mounting bracket [②]. Repeat this step for each additional probe center-point, if more than one probe is provided.

Probes less than 18 inches do not have a terminal mounting plate [⑥]. *Remove the large foam gasket* [⑤] *from the probe tube* [③] *and insert a probe into the duct after completing step 7. Use the probe mounting bracket* [②] *as a template to mark the location for the four mounting screws* [①]. *Use the alignment notches on the probe mounting bracket* [②] *to ensure proper alignment in the duct.*

Step 7. Drill a 1-1/8 inch hole at each probe center-point marked in Step 5.

Step 8. Drill appropriately sized pilot holes for each insertion mounting bracket screw [①] location (screws not provided) marked in Step 6.

Step 9. If the probes are provided with the terminal mounting plate [⑥], follow Steps 10 to 14, otherwise skip to Step 15.

Step 10. On the opposite side of the duct, mark a line perpendicular to the edge of the duct and the direction of airflow directly across from the line marked in Step 4.

Step 11. Mark a center-point on the line drawn in Step 10 directly across from each center-point marked in Step 5.

Step 12. Use the terminal mounting plate [⑥] as a template to locate the position for the four terminal mounting plate screws [⑨]. Position the terminal mounting plate [⑥] on the duct with the foam gasket pointing away from the duct so that the first center-point marked in Step 11 is in the center of the center-hole of the terminal mounting plate [⑥]. Rotate the terminal mounting plate [⑥] so that the center-line notches of the plate are aligned with the line drawn in Step 10. Mark the location of the four terminal mounting plate screws [⑨] that secure each terminal mounting plate [⑥]. Repeat this step for each additional probe center-point, if more than one probe is provided, using the center-point(s) created in Step 11.

Step 13. Drill a 1-1/8 inch hole at each probe center-point marked in Step 11.

Drilling the larger mounting hole, in lieu of a hole the size of the terminal mounting bolt, facilitates installation of longer probes.

EBTRON, Inc • 1663 Hwy 701 S., Loris, SC 29569 • Toll Free: 800-2EBTRON (232-8766) • Fax: 843-756-1838 • EBTRON.com

Step 14. Drill appropriately sized pilot holes for each terminal mounting plate screw location (screws not provided) marked in Step 12.

Step 15. Make sure the large foam gasket [⑤] is installed on each probe tube [③] against the insertion mounting bracket [②].

Probes are labeled Probe X of Y, where Y is the total number of probes provided for a location. It is recommended (not required) that probes are installed sequentially by probe number top to bottom, left to right or vice versa.

Step 16. Follow steps 17 to 22 for each probe.

Step 17. Insert the probe tube [③] in the duct with the airflow directional arrow pointing in the direction of airflow (it is ok if the arrow is upside down).

Step 18. Secure the insertion mounting bracket [②] to the duct with the four mounting screws [①] selected.

Step 19. If the probes are provided with the terminal mounting bracket [⑥], follow Steps 20 to 22, otherwise skip to Step 23.

Step 20. Place the terminal mounting plate [⑥] over the terminal mounting bolt [④] of the probe and secure the terminal mounting plate [⑥] to the duct with the four mounting screws [⑨] selected. The foam gasket on the plate should be facing the duct.

Step 21. Place the small foam gasket [⑦], large fender washer [⑧] and lock nut [⑩] on the terminal mounting bolt [④].

Step 22. Tighten the lock nut [⑩] until the small foam gasket [⑦] is compressed to approximately 50% of its original thickness.

Step 23. Probe installation is complete! Figure “B” shows a completed two probe installation.

EBTRON, Inc • 1663 Hwy 701 S., Loris, SC 29569 • Toll Free: 800-2EBTRON (232-8766) • Fax: 843-756-1838 • EBTRON.com

-P Probe Installation (Internal Mounting - Rectangular Ducts)

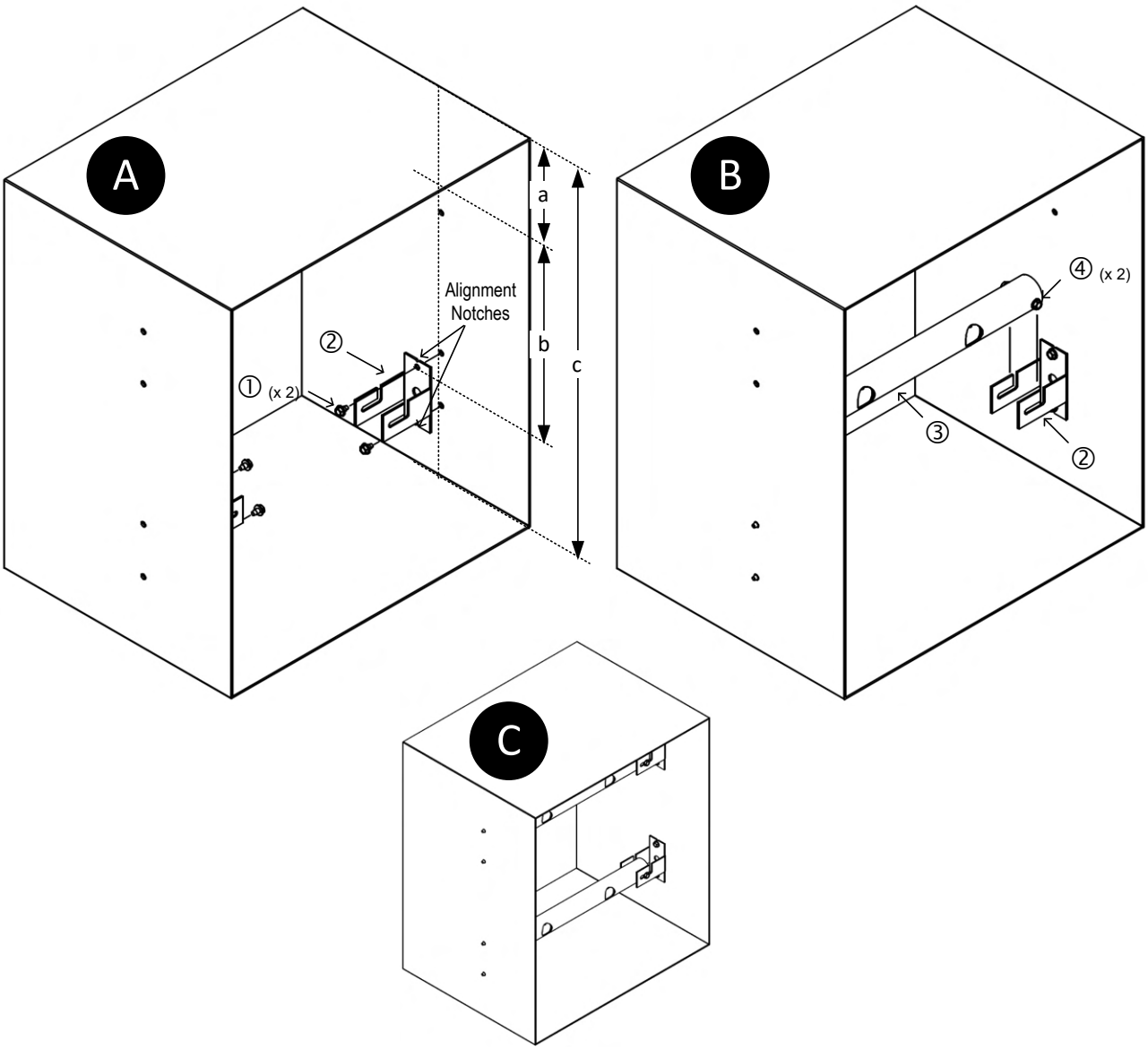

Step 1. Select a location in the duct or plenum opening that meets or exceeds EBTRON's recommended placement guidelines.

⚠ *If the location does not meet or exceed placement guidelines the installed accuracy may be compromised and field adjustment may be necessary.*

Step 2. Probes are ordered and labeled *Probe Length* x *Adjacent Side Length*. Probes are installed on the *Adjacent Side* dimension, 'c', of the duct. Verify that the duct size matches the size ordered.

⚠ *If the probe length ordered is incorrect, the sensors will not be located in the proper location, thus affecting the installed accuracy. Contact EBTRON customer service for more information.*

⚠ *If the actual size of the duct is not equal to the size ordered, the AREA parameter must be changed in the transmitter to display the proper airflow rate in CFM [l/s].*

⚠ *Do not cut the probe! Cutting the probe will void warranty.*

EBTRON, Inc • 1663 Hwy 701 S., Loris, SC 29569 • Toll Free: 800-2EBTRON (232-8766) • Fax: 843-756-1838 • EBTRON.com

REFER TO FIGURE “A” WHEN COMPLETING STEPS 3 TO 14 (unless otherwise noted).

Step 3. Vertically mounted probes subject to water condensation or accumulation (typically supply air and outdoor air intakes) should be mounted so that the cable side of the probe is at the top of the duct.

Step 4. Draw a line on the inside of the duct side chosen as the “cable out” side of the probe that is perpendicular to the edge of the duct and the direction of airflow.

Use a carpenter’s square or similar tool to ensure the probes are in the same plane and perpendicular to airflow.

Step 5. Mark a center-point on the line drawn in Step 4 where each probe is located using the spacing guidelines indicated in Table 1. If more than two probes are provided, continue spacing additional probes at the “b” interval from the previous probe.

TABLE 1 - PROBE PLACEMENT		
Number of Probes	a	b
1	c/2	
2	c/4	c/2
3	c/6	c/3
4	c/8	c/4

If the probes were ordered for a duct with internal insulation, use the internal dimension of the duct for ‘c’ to calculate ‘a’ and ‘b’.

Step 6. Loosen the two probe mounting screws ([④] in figure “B”) on the cable side of the probe tube ([③] in figure “B”) by turning each screw one full turn counter-clockwise.

The cable is intentionally not shown in the diagram.

Do not remove the probe mounting screws ([④] *in figure “B”)!*

Step 7. Remove the internal mounting bracket [②] from the probe tube ([③] in figure “B”).

Step 8. Use the internal mounting bracket [②] as a template to locate the position for the two internal mounting bracket screws [①]. Position the cable side internal mounting bracket [①] on the duct so that the center-point marked in Step 5 is in the center of the center-hole of the cable side internal mounting bracket [②]. Position the internal mounting bracket [②] so that the center-line notches of the bracket are aligned with the line drawn in Step 4. Mark the location of the two internal mounting bracket screws [①] that secure each insertion mounting bracket [②]. Repeat this step for each additional probe center-point, if more than one probe is provided.

Step 9. On the opposite side of the duct, mark a line perpendicular to the edge of the duct and the direction of airflow directly across from the line marked in Step 4.

Step 10. Mark a center-point on the line drawn in Step 9 directly across from each center-point marked in Step 5.

Step 11. Repeat step 8 for each center-point marked on the opposite side of the duct.

Step 12. Remove the remaining internal mounting brackets [②] on both sides of each probe as described in Steps 6 and 7.

Step 13. Drill appropriately sized pilot holes for each internal mounting bracket screw location (screws not provided) marked in Steps 8 and 11.

EBTRON, Inc • 1663 Hwy 701 S., Loris, SC 29569 • Toll Free: 800-2EBTRON (232-8766) • Fax: 843-756-1838 • EBTRON.com

Step 14. Secure each internal mounting bracket [②] on both sides of the duct. The notch in the bracket should be pointed in the same direction (up, down, right or left) for each bracket.

It is recommended that horizontally mounted brackets are installed with the notch pointing upwards as indicated in figure "B".

REFER TO FIGURE "B" WHEN COMPLETING STEPS 15 to 19.

Step 15. Follow steps 16 to 19 for each probe.

Probes are labeled Probe X of Y, where Y is the total number of probes provided for a location. It is recommended (not required) that probes are installed sequentially by probe number top to bottom, left to right or vice versa.

Step 16. Insert the probe mounting screws [④] of the terminal side of the probe tube [③] into the terminal side internal bracket [②] slot with the airflow directional arrow pointing in the direction of airflow (it is ok if the arrow is upside down).

Step 17. Slide the probe mounting screws [④] in the slot of the terminal side internal bracket until the probe mounting screws [④] of the cable side of the probe are aligned with the cable side internal bracket [②] slot.

Step 18. Insert the probe mounting screws [④] of the cable side of the probe tube [③] into the cable side internal bracket [②] slot.

Step 19. Position the probe tube [③] such that the probe is approximately equidistant from the duct wall on each side of the duct and tighten all four of the probe mounting screws [④].

Step 20. Route the probe cable(s) outside the duct and properly seal the wire penetration(s) with suitable material.

Probe cables are FEP jacketed, plenum rated CMP/CL2P, UL/cUL listed, -67 to 302 ºF [-55 to 150 ºC] and UV tolerant.

Step 21. Probe installation is complete! Figure "C" shows a completed two probe installation.

EBTRON, Inc • 1663 Hwy 701 S., Loris, SC 29569 • Toll Free: 800-2EBTRON (232-8766) • Fax: 843-756-1838 • EBTRON.com

-P Probe Installation (Standoff Mounting - Rectangular Ducts)

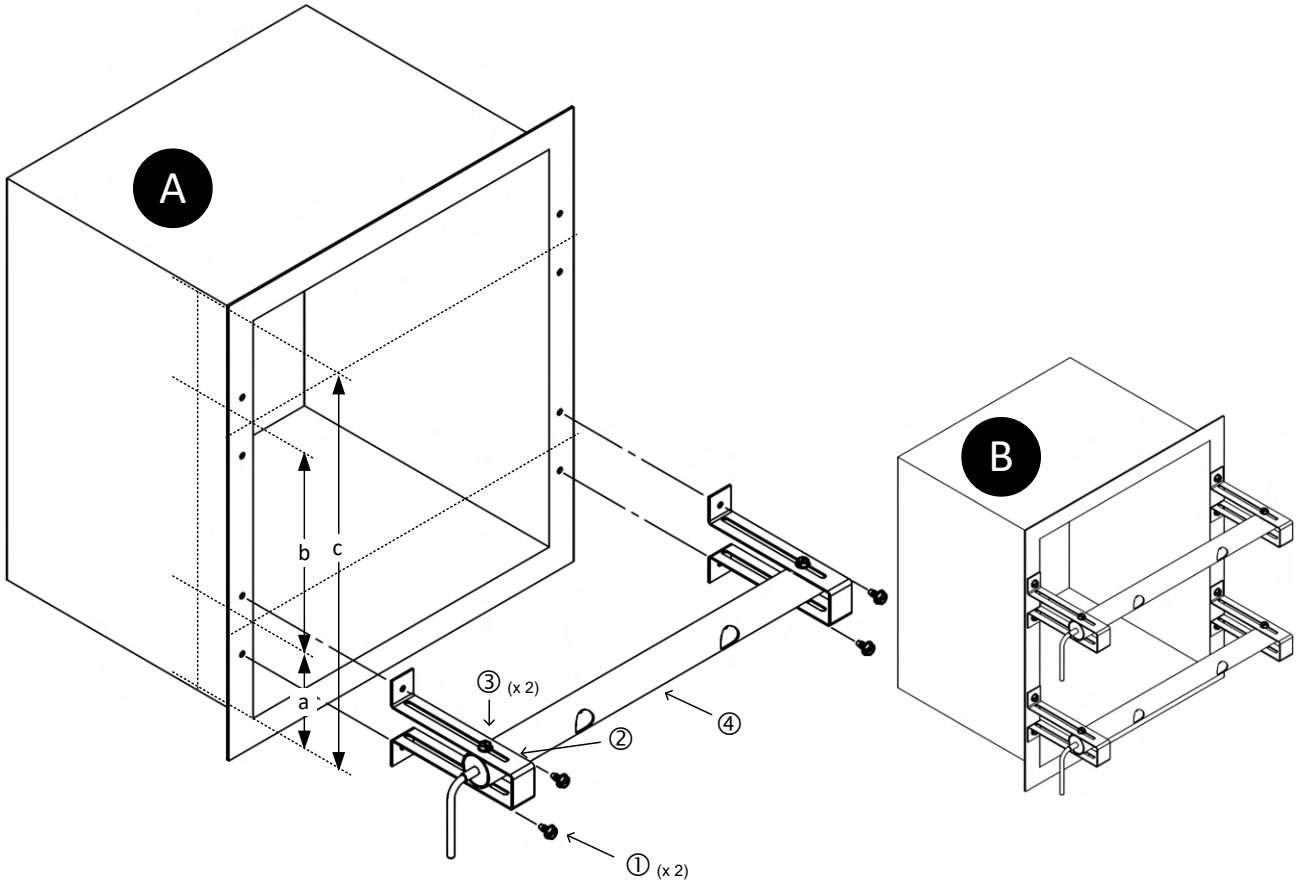

ⓘ *Standoff probes may be mounted immediately upstream of an outdoor air intake damper in applications where placement limitations prevent the installation of an extension sleeve before the damper.*

Step 1. Select a location in the duct or plenum opening that meets or exceeds EBTRON's recommended placement guidelines.

⚠ *If the location does not meet or exceed placement guidelines the installed accuracy may be compromised and field adjustment may be necessary.*

REFER TO FIGURE "A" WHEN COMPLETING STEPS 2 TO 11.

Step 2. Probes are ordered and labeled *Probe Length* x *Adjacent Side Length*. Probes are installed on the *Adjacent Side* dimension, 'c', of the duct. Verify that the opening size matches the size ordered.

⚠ *If the probe length ordered is incorrect, the sensors will not be located in the proper location, thus affecting the installed accuracy. Contact EBTRON customer service for more information.*

⚠ *If the actual size of the duct is not equal to the size ordered, the AREA parameter must be changed in the transmitter to display the proper airflow rate in CFM [l/s].*

⚠ *Do not cut the probe! Cutting the probe will void warranty.*

Step 3. Vertically mounted probes subject to water condensation or accumulation should be mounted so that the cable side of the probe is at the top of the duct.

ⓘ *Standoff probes are manufactured 2 inches [50.8mm] larger than the opening size.*

EBTRON, Inc • 1663 Hwy 701 S., Loris, SC 29569 • Toll Free: 800-2EBTRON (232-8766) • Fax: 843-756-1838 • EBTRON.com

Step 4. Mark a point on both sides of the opening where each probe will be mounted using the spacing guidelines indicated in Table 1. If more than two probes are provided, continue spacing additional probes at the "b" interval from the previous probe.

TABLE 1 - PROBE PLACEMENT		
Number of Probes	a	b
1	c/2	
2	c/4	c/2
3	c/6	c/3
4	c/8	c/4

ⓘ *If the probes were ordered for a duct with internal insulation, use the internal dimension of the duct for 'c' to calculate 'a' and 'b'*

Step 5. Standoff probes are shipped to be mounted with the direction of airflow into the duct or opening. If the probes are to be mounted so that the airflow is in the opposite direction, continue to Step 6, otherwise skip to Step 9.

⚠ *Never mount the probes downstream of a modulating damper!*

Step 6. Loosen the two probe mounting screws [③] on each mounting bracket [②] by turning each screw one full turn counter-clockwise.

⚠ *Do not remove the probe mounting screws* [③]*!*

Step 7. Rotate the bracket 90° and feed the cable through the bracket on the cable side of the probe.

Step 8. Tighten the two probe mounting screws [③] on each mounting bracket [②] so that the brackets are perpendicular to the probe (as shown in figure "A").

ⓘ *The sensor node hex screws should be on the downstream side of the probe.*

Step 9. Position the probe tube [④] so it is centered over the location for the first probe marked in Step 4. Position the cable side and opposite end mounting brackets [②] so that they are equidistant from each side of the opening. Mark the location of the two standoff mounting bracket screws [①] that secure each mounting bracket [②]. Repeat this step for each additional probe location, if more than one probe is provided.

Step 10. Drill appropriately sized pilot holes for each standoff mounting bracket screw location (screws not provided) marked in Step 9.

Step 11. Secure each probe on both sides of the duct.

Probes are labeled Probe X of Y, where Y is the total number of probes provided for a location. It is recommended (not required) that probes are installed sequentially by probe number top to bottom, left to right or vice versa.

Step 12. If the probe(s) are located upstream of a modulating outdoor air intake damper, position the downstream edge of the probe approximately 2 inches [50 mm] upstream of the imaginary plane created by the leading edges of the fully open intake damper blades as shown in the figure below.

EBTRON, Inc • 1663 Hwy 701 S., Loris, SC 29569 • Toll Free: 800-2EBTRON (232-8766) • Fax: 843-756-1838 • EBTRON.com

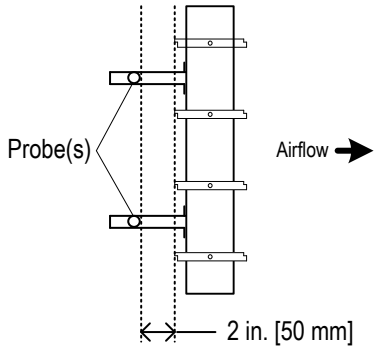

Step 13. Probe installation is complete! Figure “B” shows a completed two probe installation.

EBTRON, Inc • 1663 Hwy 701 S., Loris, SC 29569 • Toll Free: 800-2EBTRON (232-8766) • Fax: 843-756-1838 • EBTRON.com

-P Probe Installation (Insertion Mounting - Round Ducts)

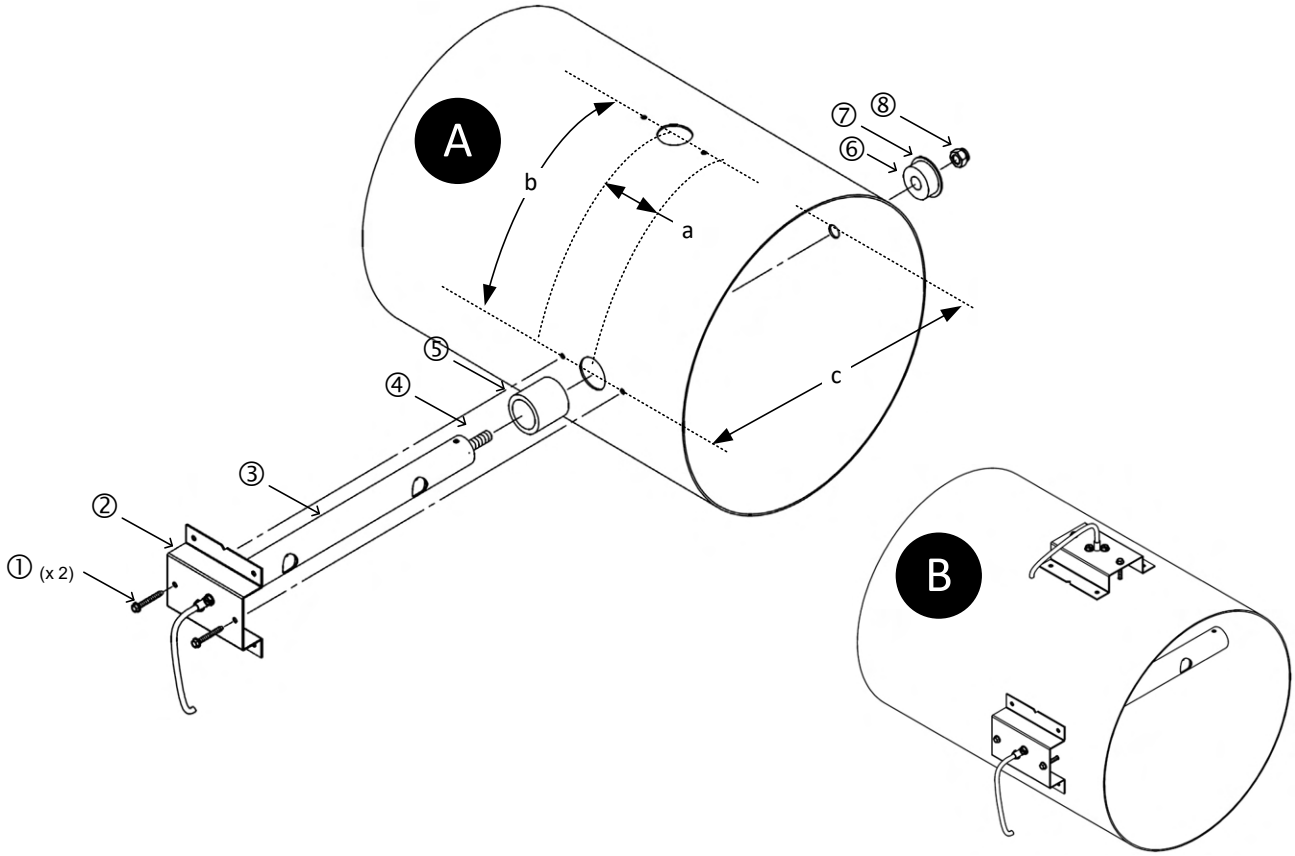

Step 1. Select a location in the duct or plenum opening that meets or exceeds EBTRON's recommended placement guidelines.

⚠ *If the location does not meet or exceed placement guidelines the installed accuracy may be compromised and field adjustment may be necessary.*

Step 2. Probes are ordered and labeled *Probe Length* x *Adjacent Side Length. The Probe Length and Adjacent side Length are the same for round ducts and equal to the diameter 'c'.* Verify that the duct size matches the size ordered.

⚠ *If the probe length ordered is incorrect, the sensors will not be located in the proper location, thus affecting the installed accuracy. Contact EBTRON customer service for more information.*

⚠ *If the actual size of the duct is not equal to the size ordered, the AREA parameter must be changed in the transmitter to display the proper airflow rate in CFM [l/s].*

⚠ *Do not cut the probe! Cutting the probe will void warranty.*

REFER TO FIGURE "A" WHEN COMPLETING STEPS 3 TO 18.

Step 3. Vertically mounted probes subject to water condensation or accumulation (typically supply air and outdoor air intakes) should be mounted so that the cable side of the probe is at the top of the duct.

Step 4. Mark a center-point where the probe will be located.

EBTRON, Inc • 1663 Hwy 701 S., Loris, SC 29569 • Toll Free: 800-2EBTRON (232-8766) • Fax: 843-756-1838 • EBTRON.com

Step 5. If two or more probes are provided, refer to Table 1 and mark an additional center-point dimension 'b' along the circumference of the duct (or angle ∠ from the previous probe) offset by dimension 'a' from the center-point marked in step 4. If more than two probes are provided, repeat this step for additional probes at the 'b' interval and offset 'a' from the previous center-point.

TABLE 1 - PROBE PLACEMENT			
Number of Probes	a	b	∠ from previous
1			
2	2" [50mm]	0.79c	90°
3	2" [50mm]	0.52c	60°
4	2" [50mm]	0.39c	45°

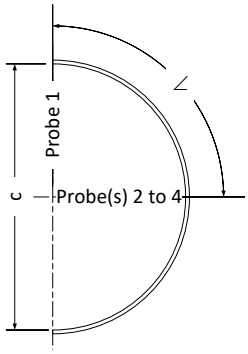

If the probes were ordered for a duct with internal insulation, use the external diameter of the duct for 'c' to calculate 'b'.

Step 6. If the probes are provided with the terminal mounting bolt [④], follow Steps 7 to 8, otherwise skip to Step 9.

Step 7. Mark a center-point directly across the duct from the points marked in Steps 3 and 4.

Step 8. Drill a ½ inch hole at each probe center-point marked in Step 7.

Step 9. Drill a 1-1/8 inch hole at each probe center-point marked in Steps 4 and 5.

Step 10. Remove the large foam gasket [⑤] from the probe tube [③] and insert a probe into the duct. Use the probe mounting bracket [②] as a template to mark the location for the two center-line mounting screws [①]. The mounting bracket will self-align on the round duct to the direction of airflow. Remove the probe from the duct. Repeat this step for additional probes if more than one probe is provided.

Removal of the foam gasket ensures that the insertion mounting plate [②] *lays flat on the duct and properly aligns in the direction of airflow.*

Step 11. Drill appropriately sized pilot holes for each insertion mounting bracket screw [①] location (screws not provided) marked in Step 10.

Step 12. Make sure the large foam gasket [⑤] is installed on each probe tube [③] against the insertion mounting bracket [②].

Probes are labeled Probe X of Y, where Y is the total number of probes provided for a location. It is recommended (not required) that probes are installed sequentially around the duct.

Step 13. Follow steps 14 to 18 for each probe.

Step 14. Insert the probe tube [③] in the duct with the airflow directional arrow pointing in the direction of airflow (it is ok if the arrow is upside down).

Step 15. Secure the insertion mounting bracket [②] to the duct with the two mounting screws [①] selected.

Step 16. If the probe is provided with the terminal bolt [④], follow Steps 17 to 18, otherwise skip to Step 19.

Step 17. Place the small foam gasket [⑥], large fender washer [⑦] and lock nut [⑧] on the terminal mounting bolt [④].

Step 18. Tighten the lock nut [⑧] until the small foam gasket [⑥] is compressed to approximately 50% of its original thickness.

Step 19. Probe installation is complete! Figure "B" shows a completed two probe installation.

EBTRON, Inc • 1663 Hwy 701 S., Loris, SC 29569 • Toll Free: 800-2EBTRON (232-8766) • Fax: 843-756-1838 • EBTRON.com

-P Probe Installation (Insertion Mounting - Oval Ducts - Type A)

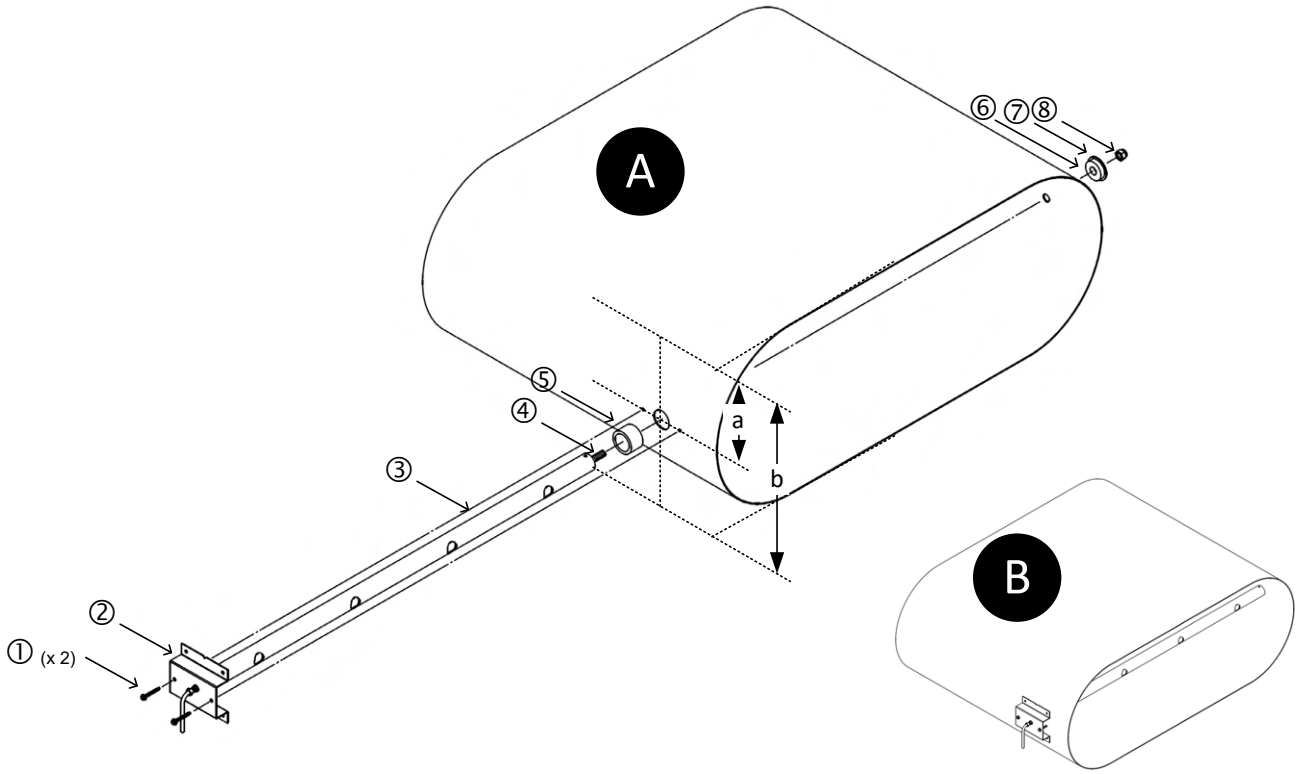

Step 1. Select a location in the duct or plenum opening that meets or exceeds EBTRON's recommended placement guidelines.

⚠ *If the location does not meet or exceed placement guidelines the installed accuracy may be compromised and field adjustment may be necessary.*

Step 2. Probes are ordered and labeled *Probe Length* x *Adjacent Side Length. The Probe Length is the major axis (longer dimension) and the Adjacent Side Length is the minor axis (shorter dimension) on Type A installations.* Verify that the duct size matches the size ordered.

⚠ *If the probe length ordered is incorrect, the sensors will not be located in the proper location, thus affecting the installed accuracy. Contact EBTRON customer service for more information.*

⚠ *If the actual size of the duct is not equal to the size ordered, the AREA parameter must be changed in the transmitter to display the proper airflow rate in CFM [l/s].*

⚠ *Do not cut the probe! Cutting the probe will void warranty.*

REFER TO FIGURE "A" WHEN COMPLETING STEPS 3 TO 16.

Step 3. Vertically mounted probes subject to water condensation or accumulation (typically supply air and outdoor air intakes) should be mounted so that the cable side of the probe is at the top of the duct.

Step 4. Mark a center-point where the probe will be located in the middle of the radiused side of the flat oval, dimension 'a' = 'b'/2, where 'b' is the minor axis (shorter) dimension of the flat oval including any internal insulation.

EBTRON, Inc • 1663 Hwy 701 S., Loris, SC 29569 • Toll Free: 800-2EBTRON (232-8766) • Fax: 843-756-1838 • EBTRON.com

Use a carpenter's square or similar tool across the flat edge of the oval to locate the center-point on the of the radiused side.

Step 5. If the probes are provided with the terminal mounting bolt [④], follow Steps 6 to 7, otherwise skip to Step 8.

Step 6. Mark a center-point directly across the duct from the points marked in Step 4.

Step 7. Drill a ½ inch hole at the probe center-point marked in Step 6.

Step 8. Drill a 1-1/8 inch hole at the probe center-point marked in Step 4.

Step 9. Remove the large foam gasket [⑤] from the probe tube [③] and insert the probe into the duct. Use the probe mounting bracket [②] as a template to mark the location for the two center-line mounting screws [①]. The mounting bracket will self-align on the round portion of the oval to the direction of airflow. Remove the probe from the duct.

Removal of the foam gasket ensures that the insertion mounting plate [②] *lays flat on the duct and properly aligns in the direction of airflow.*

Step 10. Drill appropriately sized pilot holes for each insertion mounting bracket screw [①] location (screws not provided) marked in Step 9.

Step 11. Make sure the large foam gasket [⑤] is installed on each probe tube [③] against the insertion mounting bracket [②].

Step 12. Insert the probe tube [③] in the duct with the airflow directional arrow pointing in the direction of airflow (it is ok if the arrow is upside down).

Step 13. Secure the insertion mounting bracket [②] to the duct with the two mounting screws [①] selected.

Step 14. If the probe is provided with the terminal bolt [④], follow Steps 15 to 16, otherwise skip to Step 17.

Step 15. Place the small foam gasket [⑥], large fender washer [⑦] and lock nut [⑧] on the terminal mounting bolt [④].

Step 16. Tighten the lock nut [⑧] until the small foam gasket [⑥] is compressed to approximately 50% of its original thickness.

Step 17. Probe installation is complete! Figure "B" shows the completed probe installation.

EBTRON, Inc • 1663 Hwy 701 S., Loris, SC 29569 • Toll Free: 800-2EBTRON (232-8766) • Fax: 843-756-1838 • EBTRON.com

-P Probe Installation (Insertion Mounting - Oval Ducts - Type B)

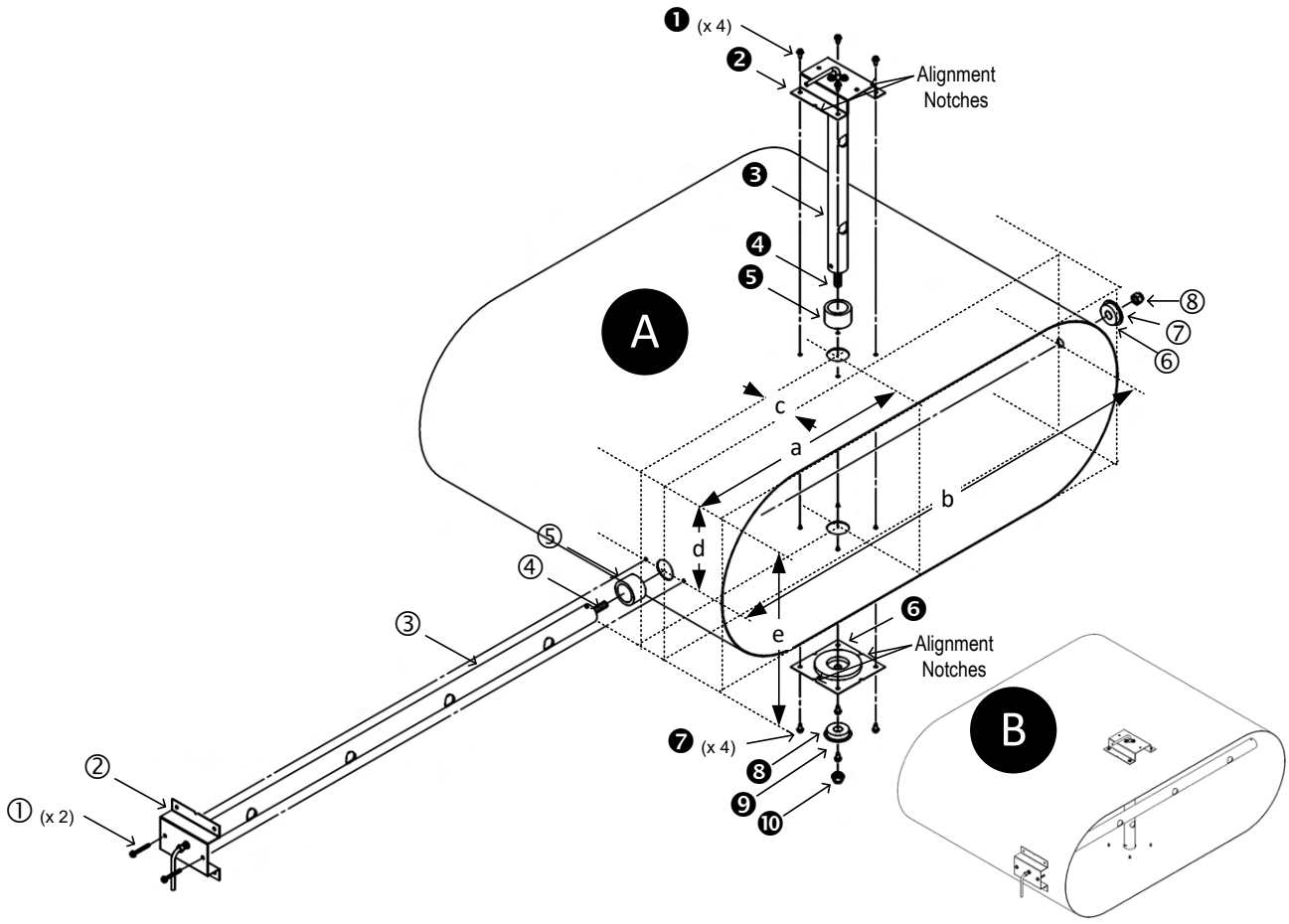

Step 1. Select a location in the duct or plenum opening that meets or exceeds EBTRON's recommended placement guidelines.

⚠ *If the location does not meet or exceed placement guidelines the installed accuracy may be compromised and field adjustment may be necessary.*

Step 2. Probes are ordered and labeled *Probe Length* x *Adjacent Side Length. One probe is installed in the major axis (longer dimension) and a second probe is installed in the minor axis (shorter dimension) on Type B installations.* Verify that the duct size matches the size ordered.

⚠ *If the probe length ordered is incorrect, the sensors will not be located in the proper location, thus affecting the installed accuracy. Contact EBTRON customer service for more information.*

⚠ *If the actual size of the duct is not equal to the size ordered, the AREA parameter must be changed in the transmitter to display the proper airflow rate in CFM [l/s].*

⚠ *Do not cut the probe! Cutting the probe will void warranty.*

REFER TO FIGURE "A" WHEN COMPLETING STEPS 3 TO 22.

Step 3. Vertically mounted probes subject to water condensation or accumulation (typically supply air and outdoor air intakes) should be mounted so that the cable side of the probe is at the top of the duct.

EBTRON, Inc • 1663 Hwy 701 S., Loris, SC 29569 • Toll Free: 800-2EBTRON (232-8766) • Fax: 843-756-1838 • EBTRON.com

Step 4. Draw a line on the outside of the duct side chosen as the insertion side that is perpendicular to the edge of the duct and the direction of airflow.

Use a carpenter's square or similar tool to ensure the probes are in the same plane and perpendicular to airflow and to locate the edge of the minor axis (shorter dimension) radius that represents the edge of the duct.

Step 5. Mark a center-point where the shorter probe will be located in the middle of the flat side of the flat oval, dimension 'a' = 'b'/2, where 'b' is the major axis (longer) dimension of the flat oval including any internal insulation.

Step 6. Use the terminal mounting plate [❻] as a template to locate the position for the four insertion mounting bracket screws [❶]. Position the terminal mounting plate [❻] on the duct with the foam gasket pointing away from the duct so that the center-point marked in Step 5 is in the center of the center-hole of the terminal mounting plate [❻]. Position the terminal mounting plate [❻] so that the center-line notches of the plate are aligned with the line drawn in Step 4. Mark the location of the four insertion mounting bracket screws [❶] that secure each insertion mounting bracket [❷].

Probes less than 18 inches do not have a terminal mounting plate [❻]*. Remove the large foam gasket* [❺] *from the probe tube* [❸] *and insert a probe into the duct after completing step 7. Use the probe mounting bracket* [❷] *as a template to mark the location for the four mounting screws* [❶]*. Use the alignment notches on the probe mounting bracket* [❷] *to ensure proper alignment in the duct.*

Step 7. Drill a 1-1/8 inch hole at the probe center-point marked in Step 5.

Step 8. Drill appropriately sized pilot holes for each insertion mounting bracket screw [❶] location (screws not provided) marked in Step 6.

Step 9. If the probe is provided with the terminal mounting plate [❻], follow Steps 10 to 14, otherwise skip to Step 15.

Step 10. On the opposite side of the duct, mark a line perpendicular to the edge of the duct and the direction of airflow directly across from the line marked in Step 4.

Step 11. Mark a center-point on the line drawn in Step 10 directly across from each center-point marked in Step 5.

Step 12. Use the terminal mounting plate [❻] as a template to locate the position for the four terminal mounting plate screws [❼]. Position the terminal mounting plate [❻] on the duct with the foam gasket pointing away from the duct so that the first center-point marked in Step 11 is in the center of the center-hole of the terminal mounting plate [❻]. Rotate the terminal mounting plate [❻] so that the center-line notches of the plate are aligned with the line drawn in Step 10. Mark the location of the four terminal mounting plate screws [❼] that secure the terminal mounting plate [❻].

Step 13. Drill a 1-1/8 inch hole at each probe center-point marked in Step 11.

Drilling the larger mounting hole, in lieu of a hole the size of the terminal mounting bolt, facilitates installation of longer probes.

Step 14. Drill appropriately sized pilot holes for each terminal mounting plate screw location (screws not provided) marked in Step 12.

Step 15. Make sure the large foam gasket [❺] is installed on each probe tube [❸] against the insertion mounting bracket [❷].

Step 16. Insert the probe tube [❸] in the duct with the airflow directional arrow pointing in the direction of airflow (it is ok if the arrow is upside down).

Step 17. Secure the insertion mounting bracket [❷] to the duct with the four mounting screws [❶] selected.

Step 18. If the probe is provided with the terminal mounting bracket [❻], follow Steps 19 to 21, otherwise skip to Step 22.

EBTRON, Inc • 1663 Hwy 701 S., Loris, SC 29569 • Toll Free: 800-2EBTRON (232-8766) • Fax: 843-756-1838 • EBTRON.com

Step 19. Place the terminal mounting plate [❻] over the terminal mounting bolt [❹] of the probe and secure the terminal mounting plate [❻] to the duct with the four mounting screws [❼] selected. The foam gasket on the plate should be facing the duct.

Step 20. Place the small foam gasket [❽], large fender washer [❾] and lock nut [❿] on the terminal mounting bolt [❹].

Step 21. Tighten the lock nut [❿] until the small foam gasket [❽] is compressed to approximately 50% of its original thickness.

Step 22. Mark a center-point where the longer probe will be located, offset by dimension 'c' (2 in. [50mm]) from the shorter probe, in the middle of the radiused side of the flat oval, dimension 'd' = 'e'/2, where 'e' is the minor axis (shorter) dimension of the flat oval including any internal insulation.

Use a carpenter's square or similar tool across the flat edge of the oval to locate the center-point on the of the radiused side.

Step 23. If the probes are provided with the terminal mounting bolt [④], follow Steps 24 to 25, otherwise skip to Step 26.

Step 24. Mark a center-point directly across the duct from the points marked in Step 22.

Step 25. Drill a ½ inch hole at the probe center-point marked in Step 24.

Step 26. Drill a 1-1/8 inch hole at the probe center-point marked in Step 22.

Step 27. Remove the large foam gasket [⑤] from the probe tube [③] and insert the probe into the duct. Use the probe mounting bracket [②] as a template to mark the location for the two center-line mounting screws [①]. The mounting bracket will self-align on the round portion of the oval to the direction of airflow. Remove the probe from the duct.

Removal of the foam gasket ensures that the insertion mounting plate [②] *lays flat on the duct and properly aligns in the direction of airflow.*

Step 28. Drill appropriately sized pilot holes for each insertion mounting bracket screw [①] location (screws not provided) marked in Step 27.

Step 29. Make sure the large foam gasket [⑤] is installed on each probe tube [③] against the insertion mounting bracket [②].

Step 30. Insert the probe tube [③] in the duct with the airflow directional arrow pointing in the direction of airflow (it is ok if the arrow is upside down).

Step 31. Secure the insertion mounting bracket [②] to the duct with the two mounting screws [①] selected.

Step 32. If the probe is provided with the terminal bolt [④], follow Steps 33 to 34, otherwise skip to Step 35.

Step 33. Place the small foam gasket [⑥], large fender washer [⑦] and lock nut [⑧] on the terminal mounting bolt [④].

Step 34. Tighten the lock nut [⑧] until the small foam gasket [⑥] is compressed to approximately 50% of its original thickness.

Step 35. Probe installation is complete! Figure "B" shows the completed two probe installation.

EBTRON, Inc • 1663 Hwy 701 S., Loris, SC 29569 • Toll Free: 800-2EBTRON (232-8766) • Fax: 843-756-1838 • EBTRON.com

-P Probe Installation (Insertion Mounting - Oval Ducts - Type C)

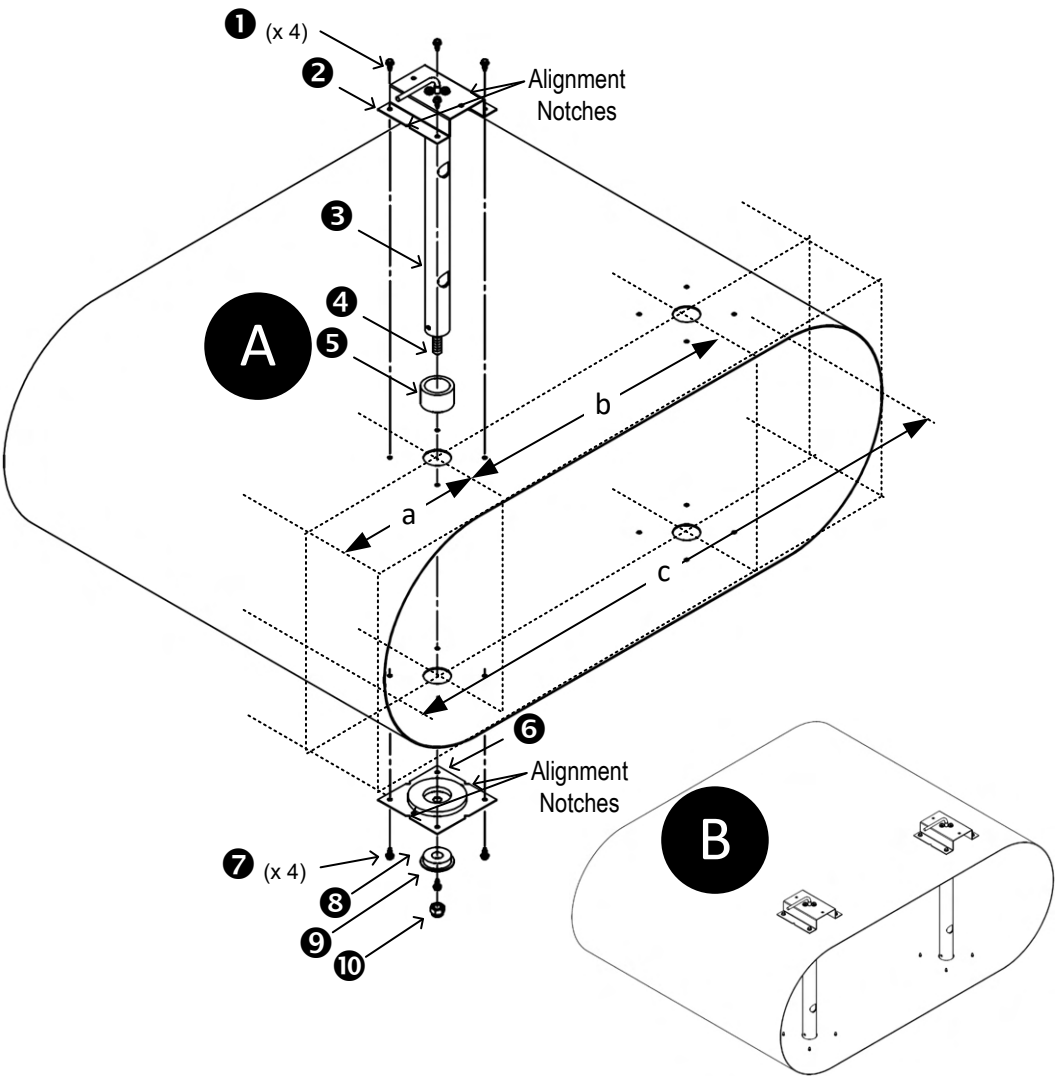

Step 1. Select a location in the duct or plenum opening that meets or exceeds EBTRON's recommended placement guidelines.

⚠ *If the location does not meet or exceed placement guidelines the installed accuracy may be compromised and field adjustment may be necessary.*

Step 2. Probes are ordered and labeled *Probe Length* x *Adjacent Side Length*. Probes are installed through the *major axis (longer dimension)* dimension, 'c', of the duct. Verify that the duct size matches the size ordered.

⚠ *If the probe length ordered is incorrect, the sensors will not be located in the proper location, thus affecting the installed accuracy. Contact EBTRON customer service for more information.*

⚠ *If the actual size of the duct is not equal to the size ordered, the AREA parameter must be changed in the transmitter to display the proper airflow rate in CFM [l/s].*

⚠ *Do not cut the probe! Cutting the probe will void warranty.*

REFER TO FIGURE "A" WHEN COMPLETING STEPS 3 TO 22.

EBTRON, Inc • 1663 Hwy 701 S., Loris, SC 29569 • Toll Free: 800-2EBTRON (232-8766) • Fax: 843-756-1838 • EBTRON.com

Step 3. Vertically mounted probes subject to water condensation or accumulation (typically supply air and outdoor air intakes) should be mounted so that the cable side of the probe is at the top of the duct.

Step 4. Draw a line on the outside of the duct side chosen as the insertion side that is perpendicular to the edge of the duct and the direction of airflow.

Use a carpenter's square or similar tool to ensure the probes are in the same plane and perpendicular to airflow and to locate the edge of the minor axis (shorter dimension) radius that represents the edge of the duct.

Step 5. Mark a center-point on the line drawn in Step 4 where each probe is located using the spacing guidelines indicated in Table 1. If more than two probes are provided, continue spacing additional probes at the 'b' interval from the previous probe.

TABLE 1 - PROBE PLACEMENT		
Number of Probes	a	b
1	c/2	
2	c/4	c/2
3	c/6	c/3
4	c/8	c/4

If the probes were ordered for a duct with internal insulation, use the internal dimension of the duct for 'c' to calculate 'a' and 'b', then add the internal insulation thickness to 'a'.

Step 6. Use the terminal mounting plate [❻] as a template to locate the position for the four insertion mounting bracket screws [❶]. Position the terminal mounting plate [❻] on the duct with the foam gasket pointing away from the duct so that the center-point marked in Step 5 is in the center of the center-hole of the terminal mounting plate [❻]. Position the terminal mounting plate [❻] so that the center-line notches of the plate are aligned with the line drawn in Step 4. Mark the location of the four insertion mounting bracket screws [❶] that secure each insertion mounting bracket [❷]. Repeat this step for each additional probe center-point, if more than one probe is provided.

Probes less than 18 inches do not have a terminal mounting plate [❻]. *Remove the large foam gasket* [❺] *from the probe tube* [❸] *and insert a probe into the duct after completing step 7. Use the probe mounting bracket* [❷] *as a template to mark the location for the four mounting screws* [❶]. *Use the alignment notches on the probe mounting bracket* [❷] *to ensure proper alignment in the duct.*

Step 7. Drill a 1-1/8 inch hole at each probe center-point marked in Step 5.

Step 8. Drill appropriately sized pilot holes for each insertion mounting bracket screw [❶] location (screws not provided) marked in Step 6.

Step 9. If the probes are provided with the terminal mounting plate [❻], follow Steps 10 to 14, otherwise skip to Step 15.

Step 10. On the opposite side of the duct, mark a line perpendicular to the edge of the duct and the direction of airflow directly across from the line marked in Step 4.

Step 11. Mark a center-point on the line drawn in Step 10 directly across from each center-point marked in Step 5.

Step 12. Use the terminal mounting plate [❻] as a template to locate the position for the four terminal mounting plate screws [❼]. Position the terminal mounting plate [❻] on the duct with the foam gasket pointing away from the duct so that the first center-point marked in Step 11 is in the center of the center-hole of the terminal mounting plate [❻]. Rotate the terminal mounting plate [❻] so that

EBTRON, Inc • 1663 Hwy 701 S., Loris, SC 29569 • Toll Free: 800-2EBTRON (232-8766) • Fax: 843-756-1838 • EBTRON.com

the center-line notches of the plate are aligned with the line drawn in Step 10. Mark the location of the four terminal mounting plate screws [❼] that secure each terminal mounting plate [❻]. Repeat this step for each additional probe center-point, if more than one probe is provided, using the center-point(s) created in Step 11.

Step 13. Drill a 1-1/8 inch hole at each probe center-point marked in Step 11.

Drilling the larger mounting hole, in lieu of a hole the size of the terminal mounting bolt, facilitates installation of longer probes.

Step 14. Drill appropriately sized pilot holes for each terminal mounting plate screw location (screws not provided) marked in Step 12.

Step 15. Make sure the large foam gasket [❺] is installed on each probe tube [❸] against the insertion mounting bracket [❷].

Probes are labeled Probe X of Y, where Y is the total number of probes provided for a location. It is recommended (not required) that probes are installed sequentially by probe number top to bottom, left to right or vice versa.

Step 16. Follow steps 17 to 22 for each probe.

Step 17. Insert the probe tube [❸] in the duct with the airflow directional arrow pointing in the direction of airflow (it is ok if the arrow is upside down).

Step 18. Secure the insertion mounting bracket [❷] to the duct with the four mounting screws [❶] selected.

Step 19. If the probes are provided with the terminal mounting bracket [❻], follow Steps 20 to 22, otherwise skip to Step 23.

Step 20. Place the terminal mounting plate [❻] over the terminal mounting bolt [❹] of the probe and secure the terminal mounting plate [❻] to the duct with the four mounting screws [❼] selected. The foam gasket on the plate should be facing the duct.

Step 21. Place the small foam gasket [❽], large fender washer [❾] and lock nut [❿] on the terminal mounting bolt [❹].

Step 22. Tighten the lock nut [❿] until the small foam gasket [❽] is compressed to approximately 50% of its original thickness.

Step 23. Probe installation is complete! Figure “B” shows the completed two probe installation.

EBTRON, Inc • 1663 Hwy 701 S., Loris, SC 29569 • Toll Free: 800-2EBTRON (232-8766) • Fax: 843-756-1838 • EBTRON.com

-T Probe Installation (Insertion Mounting)

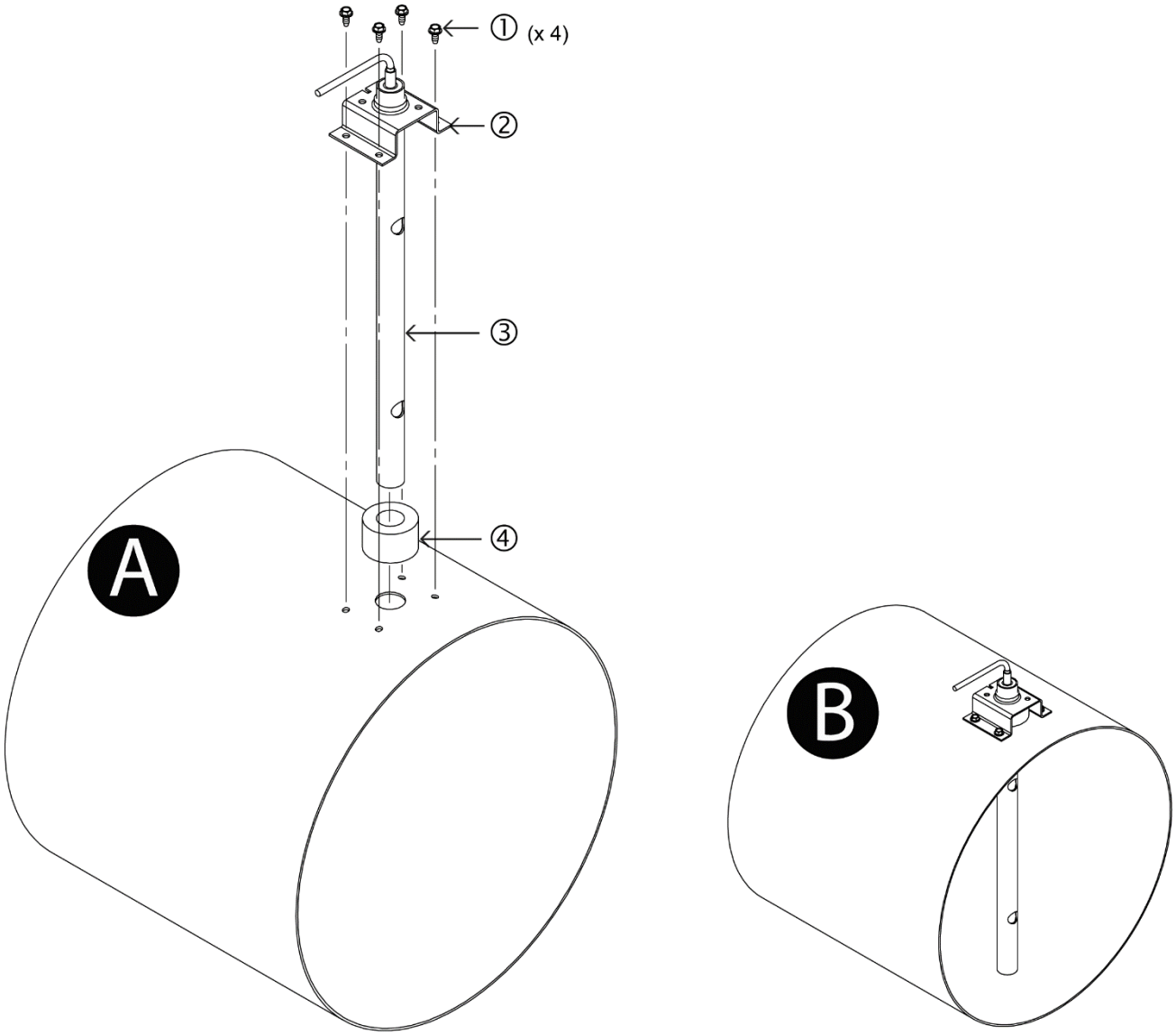

Step 1. Select a location in the duct that meets or exceeds EBTRON's recommended placement guidelines.

⚠ *If the location does not meet or exceed placement guidelines the installed accuracy may be compromised and field adjustment may be necessary.*

Step 2. Probes are ordered with probe length equal to the duct diameter. Verify that the probe length ordered matches the duct size.

⚠ *If the probe length ordered is incorrect, the sensors will not be located in the proper location, thus affecting the installed accuracy. Contact EBTRON customer service for more information.*

⚠ *If the actual size of the duct is not equal to the size ordered, the AREA parameter must be changed in the transmitter to display the proper airflow rate in CFM [l/s].*

⚠ *Do not cut the probe! Cutting the probe will void warranty.*

EBTRON, Inc • 1663 Hwy 701 S., Loris, SC 29569 • Toll Free: 800-2EBTRON (232-8766) • Fax: 843-756-1838 • EBTRON.com

ⓘ *If mounting in a terminal box, locate probe 3 inches minimum upstream of box or 3 inches minimum upstream of existing flow ring.*

REFER TO FIGURE “A” WHEN COMPLETING STEPS 3 TO 10.

Step 3. Mark the center-point where the probe will be located.

Step 4. Drill a 7/8 inch hole at the location marked in Step 3.

Step 5. Remove the foam gasket [④] from the probe tube [③] and insert a probe into the duct.

Step 6. Use the probe mounting bracket [②] as a template to mark the location for the mounting screws [①]. The mounting bracket will self-align on the round duct to the direction of airflow.

Step 7. Remove the probe from the duct, and reinstall the foam gasket [④] onto the probe tube [③].

Step 8. Drill four appropriately sized pilot holes at the locations marked in Step 6 for the four mounting screws [①] selected (screws not provided).

Step 9. Insert the probe tube [③] in the duct with the airflow directional arrow pointing in the direction of airflow.

Step 10. Secure the probe to the duct with four sheet metal screws [①] in the holes drilled in Step 8.

Step 11. Probe installation is complete! Figure “B” shows a completed probe installation.

EBTRON, Inc • 1663 Hwy 701 S., Loris, SC 29569 • Toll Free: 800-2EBTRON (232-8766) • Fax: 843-756-1838 • EBTRON.com

-U Probe Installation (Insertion Mounting)

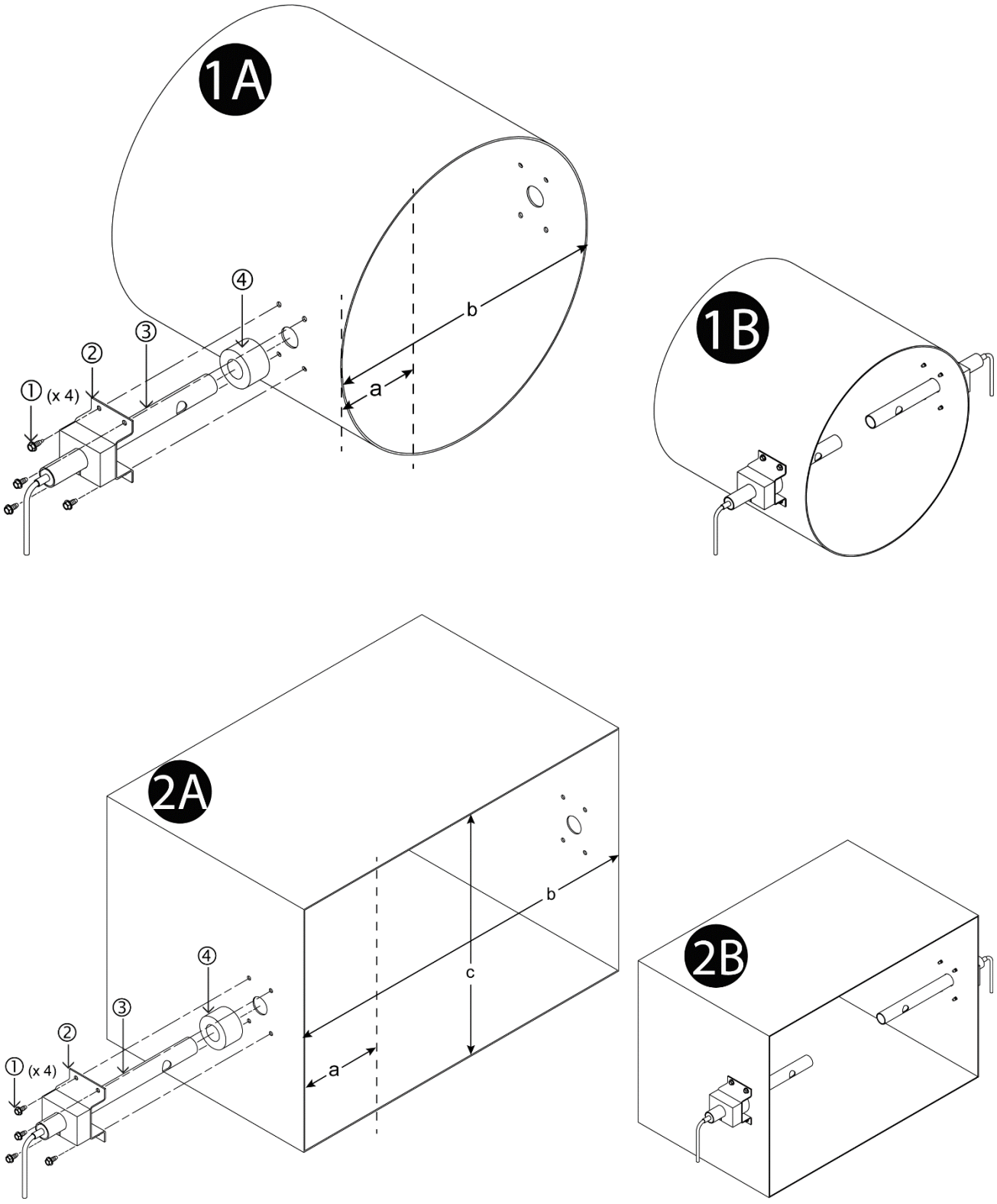

Step 1. Select a location in the duct or plenum opening that meets or exceeds EBTRON's recommended placement guidelines.

⚠ *If the location does not meet or exceed placement guidelines the installed accuracy may be compromised and field adjustment may be necessary.*

EBTRON, Inc • 1663 Hwy 701 S., Loris, SC 29569 • Toll Free: 800-2EBTRON (232-8766) • Fax: 843-756-1838 • EBTRON.com

⚠ *If ordered length does not permit equal area sensor node distribution, installed accuracy may be compromised and field adjustment may be necessary.*

⚠ *Do not cut the probe! Cutting the probe will void warranty.*

REFER TO FIGURE "1A/2A" WHEN COMPLETING STEPS 2 TO 14.

ⓘ *For oval duct installations, refer to the rectangular duct figure.*

Step 2. Determine which side(s) of the duct or plenum opening will be the insertion side for the probe(s).

ⓘ *Probes provided with adjustable insertion mounting can be installed on any side that will allow sensor node to be located for equal area distribution.*

Step 3. Mark the center-point for each probe provided as calculated in Table 1 at the location determined in Step 1:

TABLE 1 – PROBE PLACEMENT

Duct Shape	Number of Probes	Insertion Side	Probe Position
Round	1	N/A	Any Location
	2		180° Across From Each Other
Rectangular/Oval	1	Short Side (c)	c x 0.5
	1	Long Side (b)	b x 0.5
	2 (1 per Side)	Short Side (c)	c x 0.5
	2 (Same Side)	Long Side (b)	b x 0.25 (measured from opposite sides)

⚠ *When installing two probes, both must be installed on the plane established in Step 1.*

Step 4. Drill a 7/8 inch hole that is centered at each location identified in Step 3.

Step 5. Determine sensor node placement for each probe provided as indicated in Table 2 to allow for equal area sensor distribution:

TABLE 2 –SENSOR PLACEMENT ('a')

Duct Shape	Number of Probes	Insertion Side	Sensor Position
Round	1	N/A	b x 0.5
	2		b x 0.14655
Rectangular/Oval	1	Short Side (c)	b x 0.5
	1	Long Side (b)	c x 0.5
	2 (1 per Side)	Short Side (c)	b x 0.25
	2 (Same Side)	Long Side (b)	c x 0.5

ⓘ *Sensor location is measured from the insertion side of the duct referenced in Step 3 to the centerline of the sensor ('a').*

EBTRON, Inc • 1663 Hwy 701 S., Loris, SC 29569 • Toll Free: 800-2EBTRON (232-8766) • Fax: 843-756-1838 • EBTRON.com

Step 6. Measuring from the bottom of the mounting flange of the probe mounting bracket, position the probe so that the sensor is located in the position calculated in Step 5, with the guide score line centered on the guide score notch and secure with set screw. Repeat this step for second probe if more than one probe is provided (see figure below).

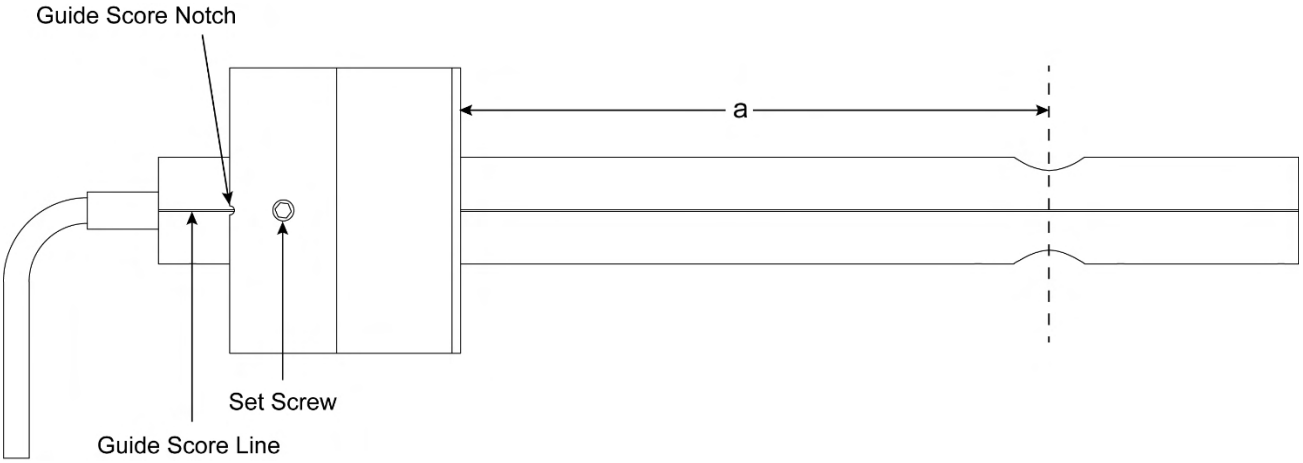

Step 7. Remove the foam gasket [④] from the probe tube [③], and insert probe into the duct.

Step 8. Align the mounting bracket [②] so that it is parallel to the edge of the duct, and the airflow directional arrow is pointing in the direction of the airflow.

ⓘ *The mounting bracket will self-align on the round duct to the direction of airflow.*

Step 9. Use the probe mounting bracket [②] as a template to mark the location for the mounting screws [①].

Step 10. Remove the probe from the duct, and reinstall the foam gasket [④] onto the probe tube [③].

Step 11. Drill the four appropriately sized pilot holes at the locations marked in Step 9 for the four mounting screws [①] selected (screws not provided).

Step 12. Insert the probe tube [③] in the duct with the airflow directional arrow pointing in the direction of airflow.

Step 13. Secure the probe to the duct with four sheet metal screws [①] in the holes drilled in Step 11.

Step 14. If two probes are being installed, repeat Steps 7 to 13 for the second probe.

Step 15. Probe installation is complete! Figures “1B/2B” show a completed two probe installation.

EBTRON, Inc • 1663 Hwy 701 S., Loris, SC 29569 • Toll Free: 800-2EBTRON (232-8766) • Fax: 843-756-1838 • EBTRON.com

-U Probe Installation (Standoff Mounting)

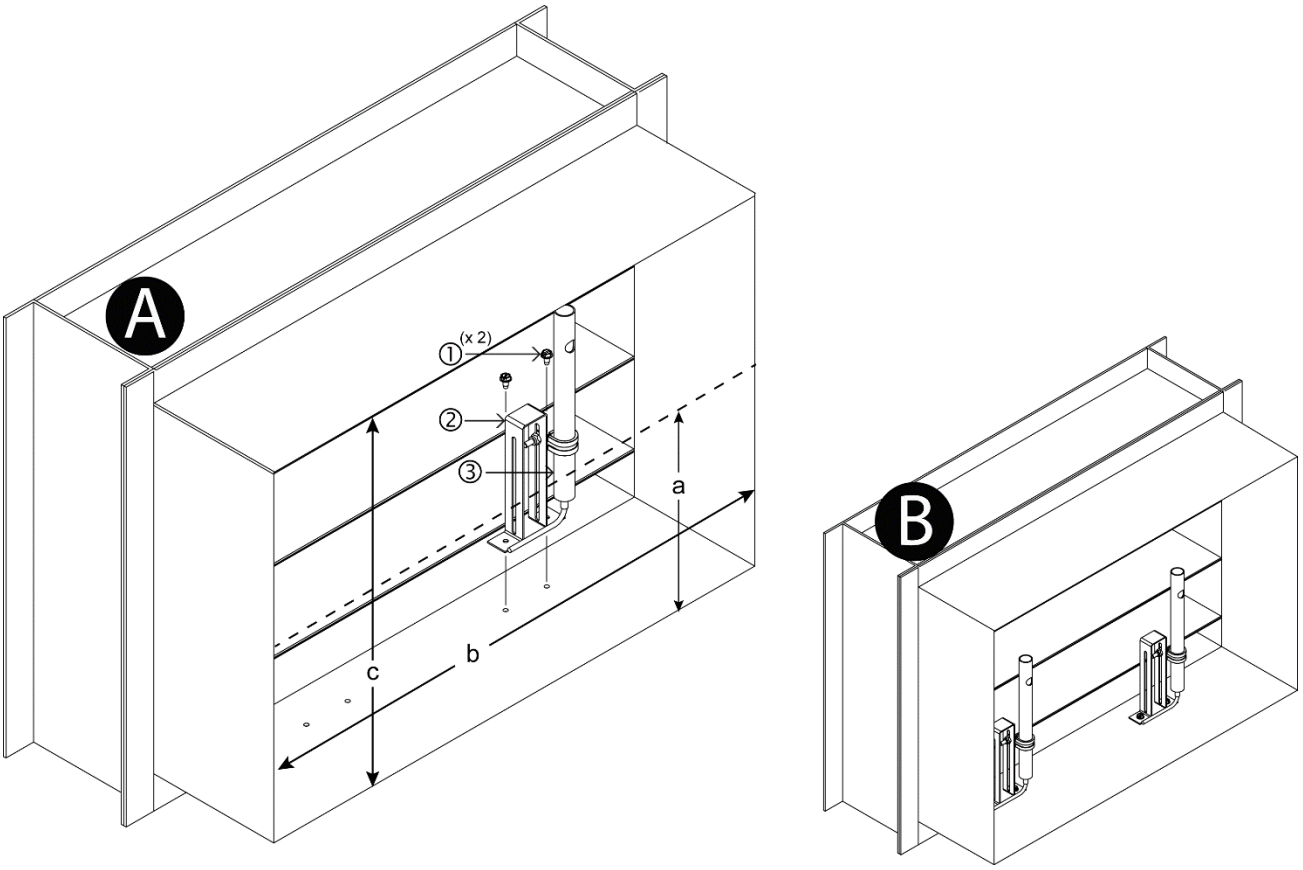

Step 1. Select a location in the duct or plenum opening that meets or exceeds EBTRON's recommended placement guidelines.

⚠ *If the location does not meet or exceed placement guidelines the installed accuracy may be compromised and field adjustment may be necessary.*

REFER TO FIGURE "A" WHEN COMPLETING STEPS 2 TO 9.

Step 2. Determine which side(s) of the duct or plenum opening will be the mounting location for the probe(s).

ⓘ *Probes provided with standoff mounting can be installed on any side that will allow sensor node to be located for equal area distribution.*

Step 3. Mark the center-point for each probe provided as calculated in Table 1 at the location determined in Step 1:

TABLE 1 – PROBE PLACEMENT		
Number of Probes	Mounting Side	Probe Position
1	Short Side (c)	c x 0.5
1	Long Side (b)	b x 0.5
2 (1 per Side)	Short Side (c)	c x 0.5
2 (Same Side)	Long Side (b)	b x 0.25 (measured from opposite sides)

⚠ *When installing two probes, both must be installed on the plane established in Step 1.*

EBTRON, Inc • 1663 Hwy 701 S., Loris, SC 29569 • Toll Free: 800-2EBTRON (232-8766) • Fax: 843-756-1838 • EBTRON.com

Step 4. Determine sensor node placement for each probe provided as indicated in Table 2 to allow for equal area sensor distribution:

TABLE 2 –SENSOR PLACEMENT ('a')		
Number of Probes	Mounting Side	Sensor Position
1	Short Side (c)	b x 0.5
1	Long Side (b)	c x 0.5
2 (1 per Side)	Short Side (c)	b x 0.25
2 (Same Side)	Long Side (b)	c x 0.5

ⓘ *Sensor location is measured from the mounting side of the duct referenced in Step 3 to the centerline of the sensor ('a').*

Step 5. Using the standoff mounting bracket [②] as a template, mark and drill the two pilot holes on the duct/opening for the mounting screws [①] selected, so that the sensor will be centered at the location calculated in Step 4 (screws not provided).

Step 6. Position the standoff mounting bracket [②] over the holes drilled in Step 5, so that the airflow directional arrow on the probe is pointing in the direction of the airflow.

Step 7. Secure standoff mounting bracket [②] to the duct/opening with two mounting screws [①] in the pre-drilled holes (screws not provided).

Step 8. Position probe in standoff bracket so that the sensor is centered in the position noted in Step 4, and secure with Adel clamp nut.

ⓘ *Installations where space is limited may make it necessary to first secure the probe in position on the mounting bracket, and then mount it to the duct.*

Step 9. If two probes are being installed, repeat Steps 5 to 8 for the second probe.

Step 10. Probe installation is complete! Figure "B" shows a completed two probe installation.

EBTRON, Inc • 1663 Hwy 701 S., Loris, SC 29569 • Toll Free: 800-2EBTRON (232-8766) • Fax: 843-756-1838 • EBTRON.com

-F Probe Installation (Face Mounting)

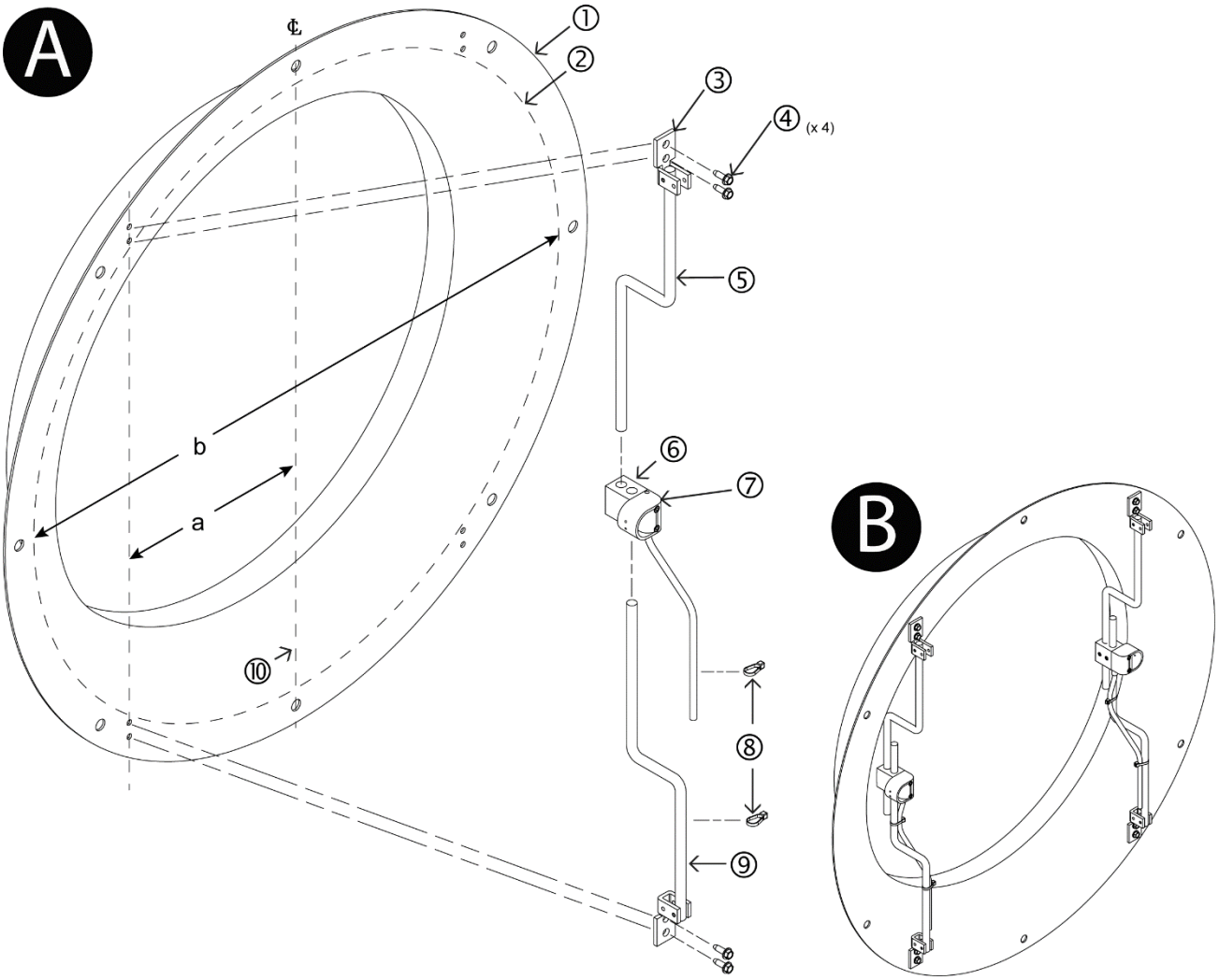

Step 1. Select a location on the face of the fan that allows clearance for probe placement and installation.

Single and dual inlet fan applications (-F/SI and -F/DI) use two probes per inlet, one each LEFT and RIGHT . Fan array models (-F/An) can use either one or two probes per inlet. If using one probe per inlet it is recommended to install probes alternating LEFT and RIGHT starting with LEFT in fan 1.

If installing two probes in fan inlet, probes should be installed parallel to each other.

It is recommended probes be installed vertically with sensors on horizontal centerline and cables exiting downward. Due to obstructions in the fan inlet it may be necessary to rotate the probes to complete installation.

REFER TO FIGURE “A” WHEN COMPLETING STEPS 2 TO 15.

When installing probes, the sensor housing shroud should always be pointing toward the side of the fan inlet bell indicated by the LEFT/RIGHT labels of the sensors. Figure “A” shows the LEFT side probe.

Step 2. Mark the centerline [⑩] of the fan inlet bell [①].

Step 3. Measure the diameter ‘b’ straight across the horizontal centerline of the fan inlet bell [①], from where the flat outer flange of the fan inlet bell ends and the radius begins [②].

EBTRON, Inc • 1663 Hwy 701 S., Loris, SC 29569 • Toll Free: 800-2EBTRON (232-8766) • Fax: 843-756-1838 • EBTRON.com

Step 4. Use the following table to determine 'a' (the distance from the vertical centerline [⑩] of fan to the centerline of the mounting feet [③]):

Table 1. Face Mount Dimension 'a' Determination

Inlet Face Diameter "b" (in)	"a" (in)	Inlet Face Diameter "b" (mm)	"a" (mm)
11	3-6/16	279.40	85.73
12	3-12/16	304.80	95.25
13	4-2/16	330.20	104.78
14	4-7/16	355.60	112.71
15	4-12/16	381.00	120.65
16	5-3/16	406.40	131.76
17	5-8/16	431.80	139.70
18	5-14/16	457.20	149.23
19	6-3/16	482.60	157.16
20	6-8/16	508.00	165.10
21	6-14/16	533.40	174.63
22	7-4/16	558.80	184.15
23	7-10/16	584.20	193.68
24	8	609.60	203.20
25	8-5/16	635.00	211.14
26	8-11/16	660.40	220.66
27	9-1/16	685.80	230.19
28	9-6/16	711.20	238.13
29	9-12/16	736.60	247.65
30	10-2/16	762.00	257.18
31	10-8/16	787.40	266.70
32	11	812.80	279.40
33	11-3/16	838.20	284.16
34	11-8/16	863.60	292.10
35	11-14/16	889.00	301.63
36	12-4/16	914.40	311.15
37	12-10/16	939.80	320.68
38	12-15/16	965.20	328.61
39	13-8/16	990.60	342.90
40	13-10/16	1016.00	346.08
41	14	1041.40	355.60
42	14-4/16	1066.80	361.95
43	14-11/16	1092.20	373.06
44	15-1/16	1117.60	382.59
45	15-7/16	1143.00	392.11
46	15-12/16	1168.40	400.05
47	16-2/16	1193.80	409.58
48	16-8/16	1219.20	419.10
49	16-13/16	1244.60	427.04
50	17-2/16	1270.00	434.98
51	17-8/16	1295.40	444.50
52	17-14/16	1320.80	454.03
53	18-4/16	1346.20	463.55
54	18-9/16	1371.60	471.49
55	18-15/16	1397.00	481.01
56	19-4/16	1422.40	488.95
57	19-10/16	1447.80	498.48
58	20	1473.20	508.00
59	20-6/16	1498.60	517.53
60	20-11/16	1524.00	525.46
61	21	1549.40	533.40
62	21-7/16	1574.80	544.51
63	21-12/16	1600.20	552.45
64	22-2/16	1625.60	561.98
65	22-8/16	1651.00	571.50
66	22-13/16	1676.40	579.44
67	23-3/16	1701.80	588.96
68	23-9/16	1727.20	598.49
69	23-14/16	1752.60	606.43
70	24-4/16	1778.00	615.95
71	24-10/16	1803.40	625.48
72	24-15/16	1828.80	633.41
73	25-5/16	1854.20	642.94
74	25-11/16	1879.60	652.46
75	26	1905.00	660.40
76	26-6/16	1930.40	669.93
77	26-12/16	1955.80	679.45

Step 5. Mark the location determined in Step 4, on the flat outer flange of the fan inlet bell [①].

Step 6. Insert upper mounting rod [⑤] (attached to mounting foot [③] at inner roll pin) into the hole of the sensor mounting block [⑥] furthest from sensor housing [⑦].

Step 7. Insert lower mounting rod [⑨] (attached to mounting foot [③] at outer roll pin) into the hole of the sensor mounting block [⑥] closest to sensor housing [⑦].

Use the included hex wrench to tighten set screws in the probe only enough to hold the rods while marking.

Step 8. Using the mounting feet [③] as a template, mark and drill the four pilot holes on the fan inlet bell flange for the mounting screws [④] selected, so that the mounting feet [③] will be centered on the lines that were marked in Step 5 (screws not provided).

Step 9. Confirm that the airflow directional arrow is pointing in the direction of airflow, and the cable is exiting downward.

Step 10. Position the probe on the fan inlet bell, and secure with four mounting screws [④] in the pre-drilled holes (screws not provided).

Failure to properly install the probe can result in probe and/or fan damage.

Step 11. If necessary, loosen set screws and position the sensor on the rods, so that it is on the centerline of the fan inlet bell.

Step 12. Once centered, tighten the set screws using the hex wrench provided.

Step 13. Using the tie wraps [⑧] provided secure cable to mounting rod so that it follows the bends, (minimum of two tie wraps [⑧] per probe).

Step 14. If installing two probes in the fan inlet, repeat Step 5 to 13, otherwise, continue to Step 15.

Step 15. For dual fan inlet or fan array applications, repeat steps above to install probes at the other fan inlet opening(s).

Step 16. Probe installation is complete! Figure “B” shows a completed two probe installation.

EBTRON, Inc • 1663 Hwy 701 S., Loris, SC 29569 • Toll Free: 800-2EBTRON (232-8766) • Fax: 843-756-1838 • EBTRON.com

-F Probe Installation (Forward Mounting)

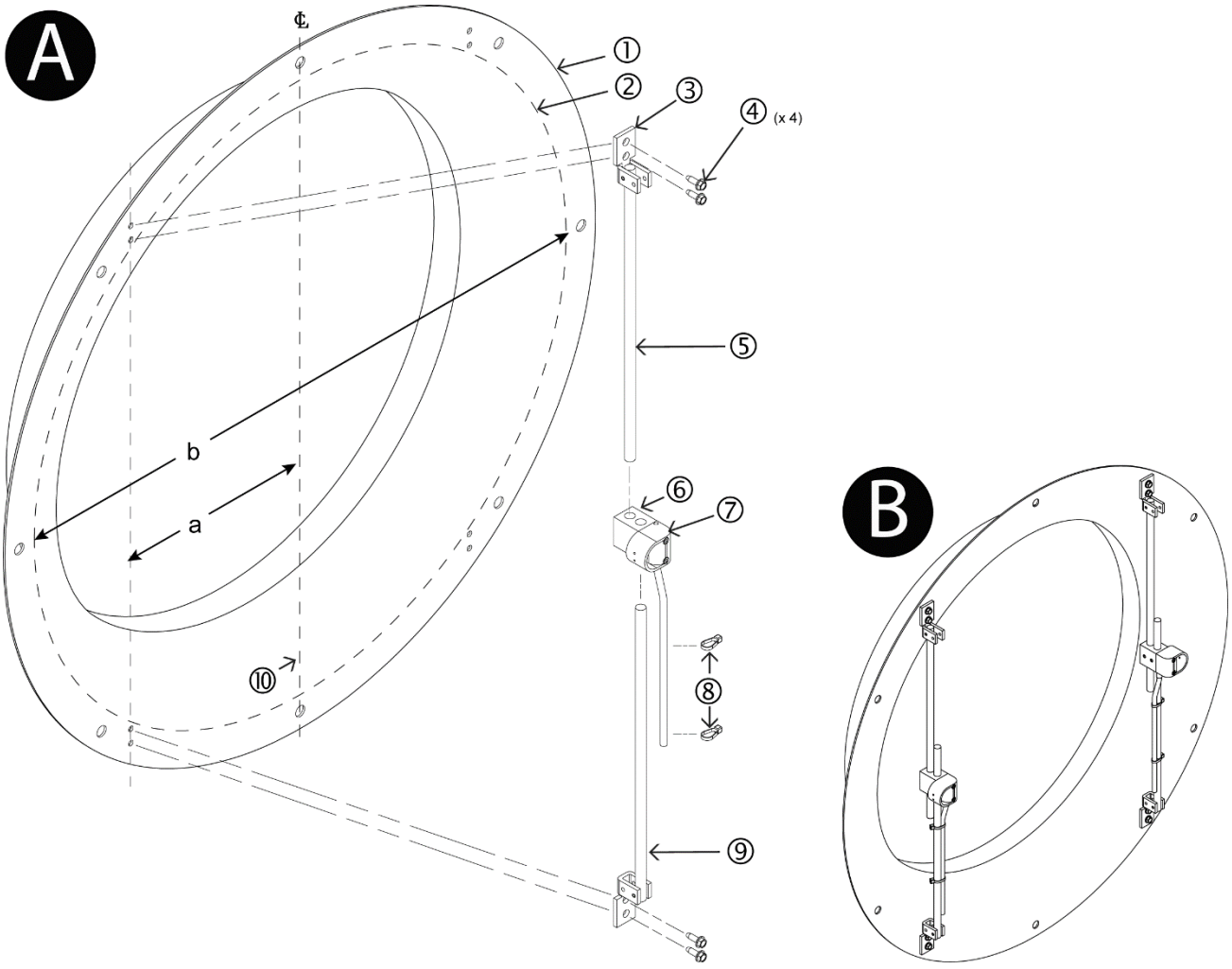

Step 1. Select a location on the fan that allows clearance for probe placement and installation.

Single and dual inlet fan applications (-F/SI and -F/DI) use two probes per inlet, one each LEFT and RIGHT . Fan array models (-F/An) can use either one or two probes per inlet. If using one probe per inlet it is recommended to install probes alternating LEFT and RIGHT starting with LEFT in fan 1.

If installing two probes in fan inlet, probes should be installed parallel to each other.

It is recommended probes be installed vertically with sensors on horizontal centerline and cables exiting downward. Due to obstructions in the fan inlet it may be necessary to rotate the probes to complete installation.

REFER TO FIGURE “A” WHEN COMPLETING STEPS 2 TO 15.

When installing probes, the sensor housing shroud should always be pointing toward the side of the fan inlet bell indicated by the LEFT/RIGHT labels of the sensors. Figure “A” shows the LEFT side probe.

Step 2. Mark the centerline [⑩] of the fan inlet bell [①].

Step 3. Measure the diameter ‘b’ straight across the horizontal centerline of the fan inlet bell [①], from where the flat outer flange of the fan inlet bell ends and the radius begins [②].

EBTRON, Inc • 1663 Hwy 701 S., Loris, SC 29569 • Toll Free: 800-2EBTRON (232-8766) • Fax: 843-756-1838 • EBTRON.com

Step 4. Use the following table to determine 'a' (the distance from the vertical centerline [⑩] of fan to the centerline of the mounting feet [③]):

Table 1. Forward Mount Dimension 'a' Determination

Inlet Face Diameter "b" (in)	"a" (in)	Inlet Face Diameter "b" (mm)	"a" (mm)
6	1-10/16	152.40	41.28
7	2	177.80	50.80
8	2-5/16	203.20	58.74
9	2-11/16	228.60	68.26
10	3-1/16	254.00	77.79
11	3-6/16	279.40	85.73
12	3-12/16	304.80	95.25
13	4-2/16	330.20	104.78
14	4-7/16	355.60	112.71
15	4-12/16	381.00	120.65
16	5-3/16	406.40	131.76
17	5-8/16	431.80	139.70
18	5-14/16	457.20	149.23
19	6-3/16	482.60	157.16
20	6-8/16	508.00	165.10
21	6-14/16	533.40	174.63
22	7-4/16	558.80	184.15
23	7-10/16	584.20	193.68
24	8	609.60	203.20
25	8-5/16	635.00	211.14

Inlet Face Diameter "b" (in)	"a" (in)	Inlet Face Diameter "b" (mm)	"a" (mm)
26	8-11/16	660.40	220.66
27	9-1/16	685.80	230.19
28	9-6/16	711.20	238.13
29	9-12/16	736.60	247.65
30	10-2/16	762.00	257.18
31	10-8/16	787.40	266.70
32	11	812.80	279.40
33	11-3/16	838.20	284.16
34	11-8/16	863.60	292.10
35	11-14/16	889.00	301.63
36	12-4/16	914.40	311.15
37	12-10/16	939.80	320.68
38	12-15/16	965.20	328.61
39	13-8/16	990.60	342.90
40	13-10/16	1016.00	346.08
41	14	1041.40	355.60
42	14-4/16	1066.80	361.95
43	14-11/16	1092.20	373.06
44	15-1/16	1117.60	382.59
45	15-7/16	1143.00	392.11

Inlet Face Diameter "b" (in)	"a" (in)	Inlet Face Diameter "b" (mm)	"a" (mm)
46	15-12/16	1168.40	400.05
47	16-2/16	1193.80	409.58
48	16-8/16	1219.20	419.10
49	16-13/16	1244.60	427.04
50	17-2/16	1270.00	434.98
51	17-8/16	1295.40	444.50
52	17-14/16	1320.80	454.03
53	18-4/16	1346.20	463.55
54	18-9/16	1371.60	471.49
55	18-15/16	1397.00	481.01
56	19-4/16	1422.40	488.95
57	19-10/16	1447.80	498.48
58	20	1473.20	508.00
59	20-6/16	1498.60	517.53
60	20-11/16	1524.00	525.46
61	21	1549.40	533.40
62	21-7/16	1574.80	544.51
63	21-12/16	1600.20	552.45
64	22-2/16	1625.60	561.98

Step 5. Mark the location determined in Step 4, on the flat outer flange of the fan inlet bell [①].

Step 6. Insert upper mounting rod [⑤] (attached to mounting foot [③] at inner roll pin) into the hole of the sensor mounting block [⑥] furthest from sensor housing [⑦].

Step 7. Insert lower mounting rod [⑨] (attached to mounting foot [③] at outer roll pin) into the hole of the sensor mounting block [⑥] closest to sensor housing [⑦].

Use the included hex wrench to tighten set screws in the probe only enough to hold the rods while marking.

Step 8. Using the mounting feet [③] as a template, mark and drill the four pilot holes on the fan inlet bell flange for the mounting screws [④] selected, so that the mounting feet [③] will be centered on the lines that were marked in Step 5 (screws not provided).

Step 9. Confirm that the airflow directional arrow is pointing in the direction of airflow, and the cable is exiting downward.

Step 10. Position the probe on the fan inlet bell, and secure with four mounting screws [④] in the pre-drilled holes (screws not provided).

Failure to properly install the probe can result in probe and/or fan damage.

Step 11. If necessary, loosen set screws and position the sensor on the rods, so that it is on the centerline of the fan inlet bell.

Step 12. Once centered, tighten the set screws using the hex wrench provided.

Step 13. Using the tie wraps [⑧] provided secure cable to mounting rod (minimum of two tie wraps [⑧] per probe).

Step 14. If installing two probes in the fan inlet, repeat Step 5 to 13, otherwise, continue to Step 15.

Step 15. For dual fan inlet or fan array applications, repeat steps above to install probes at the other fan inlet opening(s).

Step 16. Probe installation is complete! Figure “B” shows a completed two probe installation.

EBTRON, Inc • 1663 Hwy 701 S., Loris, SC 29569 • Toll Free: 800-2EBTRON (232-8766) • Fax: 843-756-1838 • EBTRON.com

-F Probe Installation (Flare Mounting)

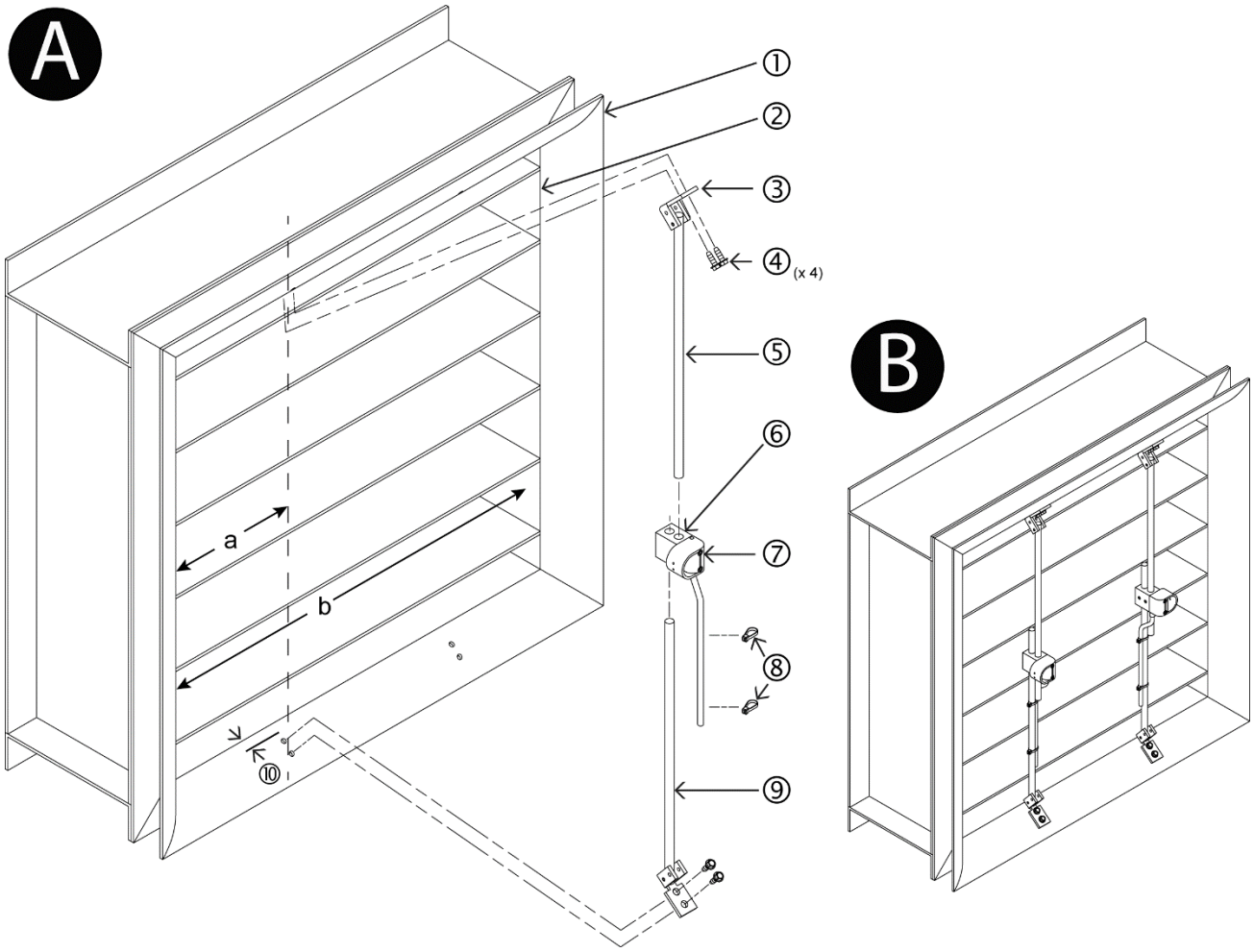

Step 1. Select a location on the damper flare that allows clearance for probe placement and installation.

Single and dual inlet fan applications (-F/SI and -F/DI) use two probes per damper, one each LEFT and RIGHT. Fan array models (-F/An) can use either one or two probes per damper. If using one probe per damper it is recommended to install probes alternating LEFT and RIGHT starting with LEFT in fan 1.

It is recommended probes be installed vertically with sensors on horizontal centerline and cables exiting downward. Due to obstructions in the damper it may be necessary to rotate the probes to complete installation.

REFER TO FIGURE “A” WHEN COMPLETING STEPS 2 TO 16.

When installing probes, the sensor housing shroud should always be pointing toward the side of the damper indicated by the LEFT/RIGHT labels of the sensors. Figure “A” shows the LEFT side probe.

Step 2. Measure ‘b’ straight across the inner surface of the inner edge of the flare [②].

EBTRON, Inc • 1663 Hwy 701 S., Loris, SC 29569 • Toll Free: 800-2EBTRON (232-8766) • Fax: 843-756-1838 • EBTRON.com

Step 3. Use the following appropriate equation to calculate 'a' (the distance from the LEFT/RIGHT side of damper to the centerline of the mounting feet [③]):

TABLE 1 – PROBE PLACEMENT	
Number of Probes	a
1	(b/2) + 0.5 in. [13 mm]
2	(b/4) + 0.5 in. [13 mm]

Step 4. Mark the location calculated in Step 3, on the flare surface of the damper [①].

⚠ *If installing a probe marked LEFT measure from the left side of the damper; if installing a probe marked RIGHT measure from the right side of the damper.*

Step 5. Mark a line ¼ inch [⑩] from the inner edge of the flare [②] for the lower mounting foot perpendicular to the mark made in Step 4.

Step 6. Insert upper mounting rod [⑤]into the hole of the sensor mounting block [⑥] closest to sensor housing [⑦].

ⓘ *Both rods are identical to each other, and can be used in either the upper or lower location.*

Step 7. Insert lower mounting rod [⑨] into the hole of the sensor mounting block [⑥] furthest from sensor housing [⑦].

Tighten set screws in the probe only enough to hold the rods while marking.

Step 8. Position the probe [⑦] so that the back of the lower foot [③] is on the mark made in Step 5, both mounting feet [③] are centered on the lines that were marked in Step 4 and both rods are parallel to the inner edge of the flare [②].

Step 9. Maintaining the position from Step 8, use the mounting feet [③] as a template to mark and drill the four pilot holes on the damper flare surface for the mounting screws [④] selected (screws not provided).

Step 10. Confirm that the airflow directional arrow is pointing in the direction of airflow, and the cable is exiting downward.

Step 11. Position the probe on the damper flare surface, and secure with four mounting screws [④] in the pre-drilled holes (screws not provided).

⚠ *Failure to properly install the probe can result in probe and/or damper damage.*

Step 12. If necessary, loosen set screws and position the sensor on the rods, so that it is on the centerline of the damper.

Step 13. Once centered, tighten the set screws using the hex wrench provided.

Step 14. Using the tie wraps [⑧] provided secure cable to mounting rod (minimum of two tie wraps [⑧] per probe).

Step 15. If installing two probes in the damper, repeat Steps 4 to 14, otherwise, continue to Step 16.

Step 16. For dual fan inlet or fan array applications, repeat steps above to install probes at the other damper opening(s).

Step 17. Probe installation is complete! Figure “B” shows a completed two probe installation.

EBTRON, Inc • 1663 Hwy 701 S., Loris, SC 29569 • Toll Free: 800-2EBTRON (232-8766) • Fax: 843-756-1838 • EBTRON.com

-F Probe Installation (Throat Mounting)

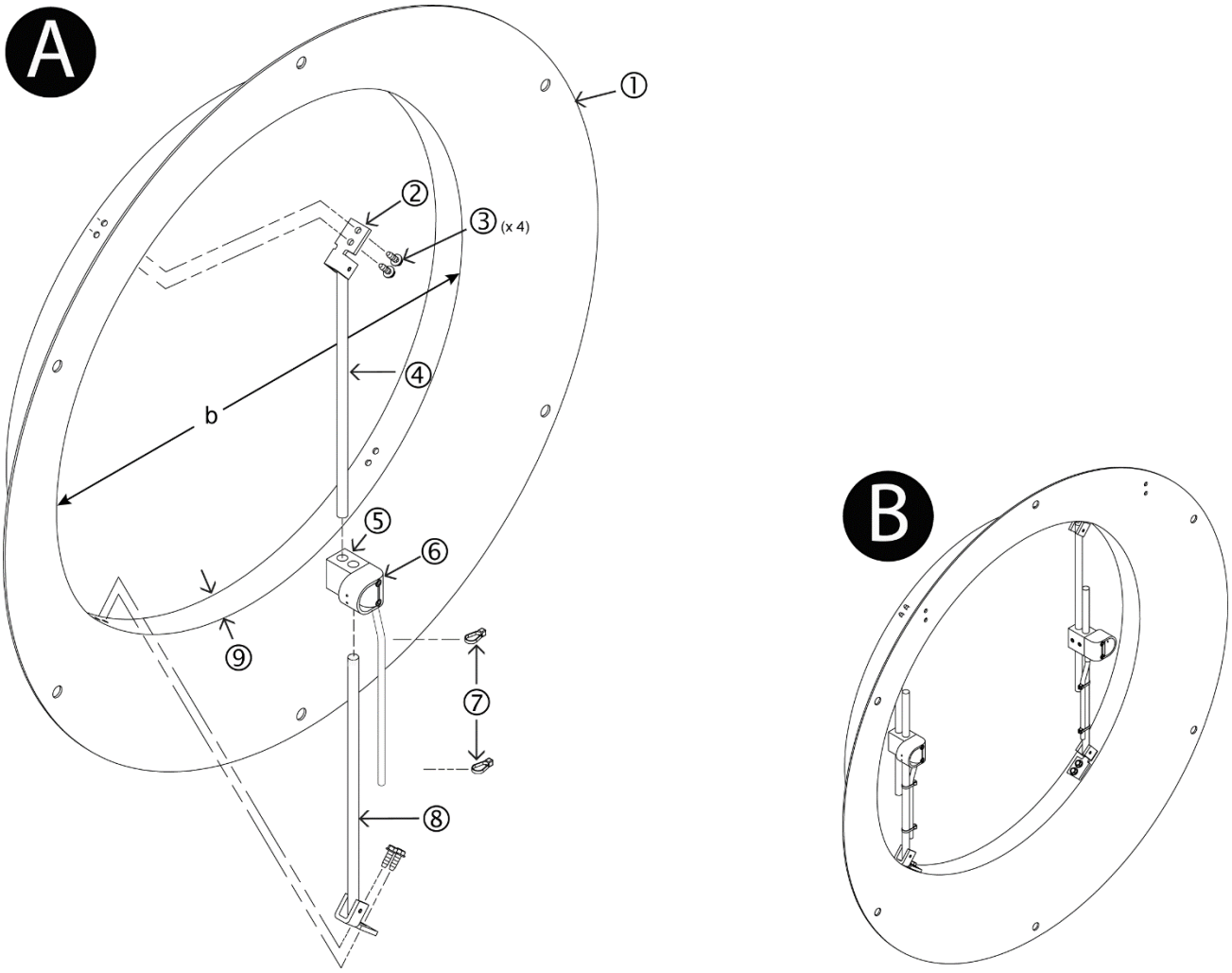

Step 1. Select a location on the fan that allows clearance for probe placement and installation.

Single and dual inlet fan applications (-F/SI and -F/DI) use two probes per inlet, one each LEFT and RIGHT . Fan array models (-F/An) can use either one or two probes per inlet. If using one probe per inlet it is recommended to install probes alternating LEFT and RIGHT starting with LEFT in fan 1.

If installing two probes in fan inlet, probes should be installed parallel to each other.

It is recommended probes be installed vertically with sensors on horizontal centerline and cables exiting downward. Due to obstructions in the fan inlet it may be necessary to rotate the probes to complete installation.

REFER TO FIGURE “A” WHEN COMPLETING STEPS 2 TO 13.

When installing probes, the sensor housing shroud should always be pointing toward the side of the fan inlet bell indicated by the LEFT/RIGHT labels of the sensors. Figure “A” shows the LEFT side probe.

Step 2. Measure the diameter ‘b’ across the centerline of the throat [⑨] at the smallest diameter of the fan inlet bell [①].

EBTRON, Inc • 1663 Hwy 701 S., Loris, SC 29569 • Toll Free: 800-2EBTRON (232-8766) • Fax: 843-756-1838 • EBTRON.com

Step 3. Use the following table to determine “a” the distance between the roll pin [❶] of each foot [②] and the set screws [❷] on the sensor mounting block [⑤]:

Table 1. Throat Mount Dimension ‘a’ Determination

Inlet Diameter "b" (in)	“a” (in)	Inlet Diameter "b" (mm)	“a” (mm)
6	1-14/16	152.40	48.24
7	2-4/16	177.80	57.52
8	2-10/16	203.20	66.74
9	3	228.60	75.91
10	3-6/16	254.00	85.04
11	3-11/16	279.40	94.15
12	4-1/16	304.80	103.24
13	4-7/16	330.20	112.32
14	4-12/16	355.60	121.38
15	5-2/16	381.00	130.43
16	5-8/16	406.40	139.47
17	5-14/16	431.80	148.51
18	6-3/16	457.20	157.54
19	6-9/16	482.60	166.57
20	6-15/16	508.00	175.59
21	7-4/16	533.40	184.61
22	7-10/16	558.80	193.62
23	8	584.20	202.63
24	8-5/16	609.60	211.64
25	8-11/16	635.00	220.65

Inlet Diameter "b" (in)	“a” (in)	Inlet Diameter "b" (mm)	"a" (mm)
26	9-1/16	660.40	229.66
27	9-6/16	685.80	238.66
28	9-12/16	711.20	247.66
29	10-2/16	736.60	256.66
30	10-7/16	762.00	265.66
31	10-13/16	787.40	274.66
32	11-3/16	812.80	283.66
33	11-8/16	838.20	292.65
34	11-14/16	863.60	301.65
35	12-4/16	889.00	310.64
36	12-9/16	914.40	319.63
37	12-15/16	939.80	328.63
38	13-5/16	965.20	337.62
39	13-10/16	990.60	346.61
40	14	1016.00	355.60
41	14-6/16	1041.40	364.59
42	14-11/16	1066.80	373.58
43	15-1/16	1092.20	382.57
44	15-7/16	1117.60	391.56
45	15-12/16	1143.00	400.55

Inlet Diameter "b" (in)	“a” (in)	Inlet Diameter "b" (mm)	“a” (mm)
46	16-2/16	1168.40	409.54
47	16-8/16	1193.80	418.53
48	16-13/16	1219.20	427.51
49	17-3/16	1244.60	436.50
50	17-9/16	1270.00	445.49
51	17-14/16	1295.40	454.48
52	18-4/16	1320.80	463.46
53	18-10/16	1346.20	472.45
54	18-15/16	1371.60	481.43
55	19-5/16	1397.00	490.42
56	19-11/16	1422.40	499.41
57	20	1447.80	508.39
58	20-6/16	1473.20	517.38
59	20-12/16	1498.60	526.36
60	21-1/16	1524.00	535.35
61	21-7/16	1549.40	544.33
62	21-13/16	1574.80	553.32
63	22-2/16	1600.20	562.30
64	22-8/16	1625.60	571.29
65	22-14/16	1651.00	580.27
66	23-3/16	1676.40	589.26

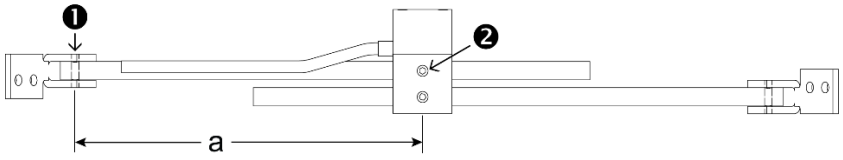

Step 4. Insert upper mounting rod [④] into the hole of the sensor mounting block [⑤] furthest from sensor housing [⑥].

ⓘ *Both rods are identical to each other, and can be used in either the upper or lower location.*

Step 5. Insert lower mounting rod [⑧] into the hole of the sensor mounting block [⑤] closest to sensor housing [⑥].

Step 6. Position the rods so that mounting feet [②] are facing center of fan and the distance between the roll pin of each mounting foot [②] and the set screw on the sensor mounting block [⑤] is the measurement determined in Step 3.

Step 7. Tighten the set screws using hex wrench provided.

Step 8. Using the mounting feet [②] as a template, mark and drill the four pilot holes on the fan inlet bell throat [⑨] for the mounting screws [③] selected, so that the sensor probe is positioned as shown above (screws not provided).

Step 9. Confirm that the airflow directional arrow is pointing in the direction of airflow, and the cable is exiting downward.

Step 10. Position the probe on the fan inlet bell throat [⑨], and secure with the mounting screws [③] in the pre-drilled holes (screws not provided).

⚠ *Failure to properly install the probe can result in probe and/or fan damage.*

Step 11. Using the tie wraps [⑦] provided secure cable to mounting rod (minimum of two tie wraps [⑦] per probe).

Step 12. If installing two probes in the fan inlet, repeat Steps 4 to 11, otherwise, continue to Step 13.

Step 13. For dual fan inlet or fan array applications, repeat steps above to install probes at the other fan inlet opening(s).

Step 14. Probe installation is complete! Figure “B” shows a completed two probe installation.

EBTRON, Inc • 1663 Hwy 701 S., Loris, SC 29569 • Toll Free: 800-2EBTRON (232-8766) • Fax: 843-756-1838 • EBTRON.com

-F Probe Installation (Cantilever Mounting)

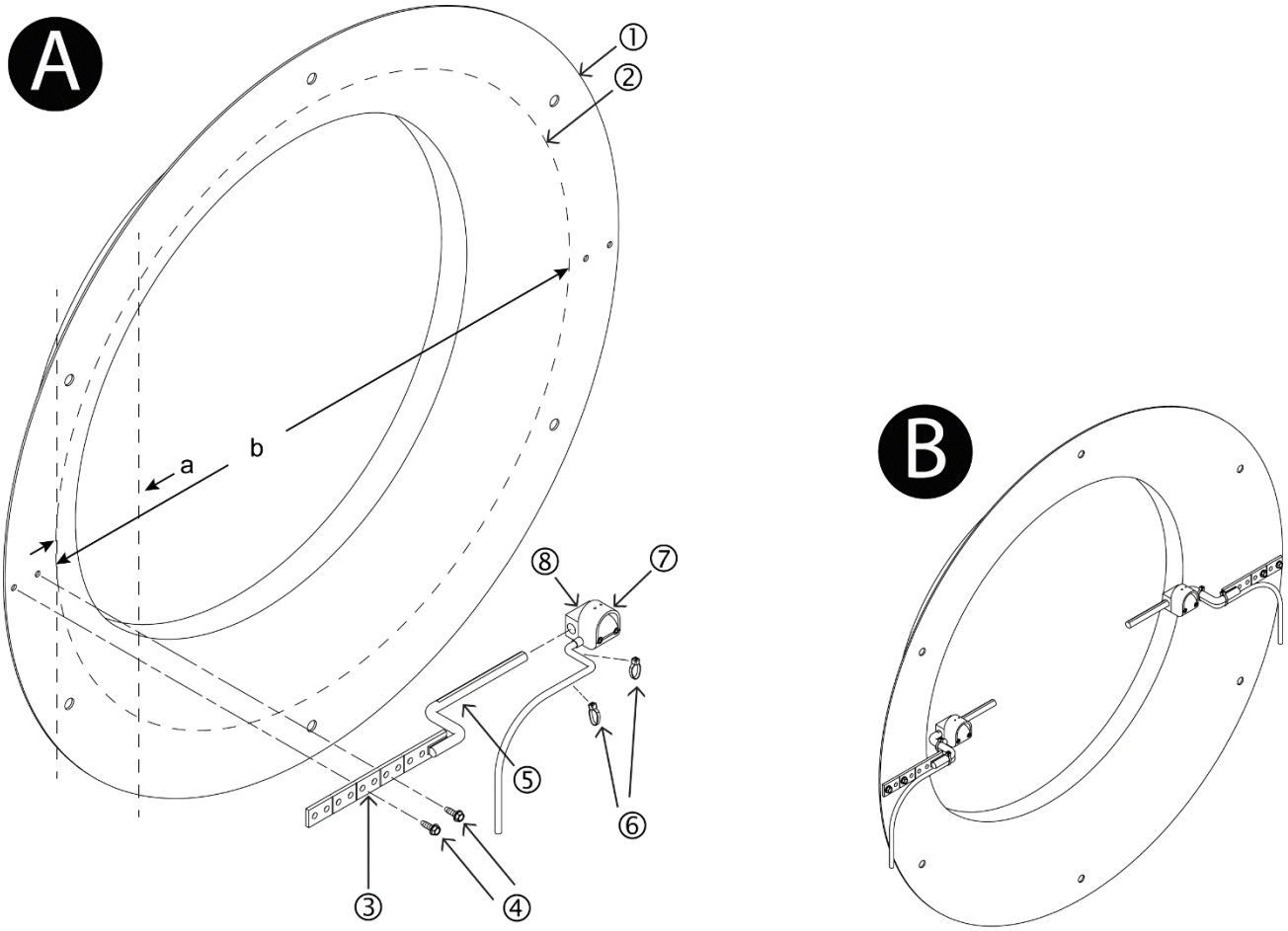

Step 1. Select a location on the face of the fan that allows clearance for probe placement and installation.

Single and dual inlet fan applications (-F/SI and -F/DI) use two probes per inlet, one each LEFT and RIGHT. Fan array models (-F/An) can use either one or two probes per inlet. If using one probe per inlet it is recommended to install probes alternating LEFT and RIGHT starting with LEFT in fan 1.

If installing two probes in fan inlet, probes should be installed 180 degrees from each other.

It is recommended probes be installed on horizontal centerline with cables exiting toward mounting screws, however due to obstructions in the fan inlet it may be necessary to rotate the probes to complete installation.

REFER TO FIGURE “A” WHEN COMPLETING STEPS 2 TO 16.

Step 2. Measure the diameter ‘b’ straight across the horizontal centerline of the inlet bell [①], from where the flat outer flange of the fan inlet bell ends and the radius begins [②].

Marking the centerline across the outer fan inlet flange will make it easier to position the mounting rods in the following steps.

EBTRON, Inc • 1663 Hwy 701 S., Loris, SC 29569 • Toll Free: 800-2EBTRON (232-8766) • Fax: 843-756-1838 • EBTRON.com

Step 3. Use the following table to determine 'a' (the distance from where the flat outer flange of the fan inlet bell ends and the radius begins to the centerline of the sensor):

Table 1. Cantilever Mount Dimension 'a' Determination

Inlet Face Diameter "b" (in)	"a" (in)	Inlet Face Diameter "b" (mm)	"a" (mm)
11	1-10/16	279.40	40.92
12	1-12/16	304.80	44.64
13	1-14/16	330.20	48.36
14	2-1/16	355.60	52.08
15	2-3/16	381.00	55.80
16	2-5/16	406.40	59.52
17	2-8/16	431.80	63.24
18	2-10/16	457.20	66.96
19	2-13/16	482.60	70.68
20	2-15/16	508.00	74.39
21	3-1/16	533.40	78.11
22	3-4/16	558.80	81.83
23	3-6/16	584.20	85.55
24	3-8/16	609.60	89.27
25	3-11/16	635.00	92.99
26	3-13/16	660.40	96.71
27	3-15/16	685.80	100.43
28	4-2/16	711.20	104.15
29	4-4/16	736.60	107.87
30	4-6/16	762.00	111.59
31	4-9/16	787.40	115.31
32	4-11/16	812.80	119.03
33	4-13/16	838.20	122.75
34	5	863.60	126.47

Inlet Face Diameter "b" (in)	"a" (in)	Inlet Face Diameter "b" (mm)	"a" (mm)
35	5-2/16	889.00	130.19
36	5-4/16	914.40	133.91
37	5-7/16	939.80	137.63
38	5-9/16	965.20	141.35
39	5-11/16	990.60	145.07
40	5-14/16	1016.00	148.79
41	6	1041.40	152.51
42	6-2/16	1066.80	156.23
43	6-5/16	1092.20	159.95
44	6-7/16	1117.60	163.67
45	6-9/16	1143.00	167.39
46	6-12/16	1168.40	171.11
47	6-14/16	1193.80	174.83
48	7	1219.20	178.55
49	7-3/16	1244.60	182.27
50	7-5/16	1270.00	185.99
51	7-8/16	1295.40	189.71
52	7-10/16	1320.80	193.43
53	7-12/16	1346.20	197.15
54	7-15/16	1371.60	200.87
55	8-1/16	1397.00	204.59
56	8-3/16	1422.40	208.31
57	8-6/16	1447.80	212.03
58	8-8/16	1473.20	215.75

Inlet Face Diameter "b" (in)	"a" (in)	Inlet Face Diameter "b" (mm)	"a" (mm)
59	8-10/16	1498.60	219.46
60	8-13/16	1524.00	223.18
61	8-15/16	1549.40	226.90
62	9-1/16	1574.80	230.62
63	9-4/16	1600.20	234.34
64	9-6/16	1625.60	238.06
65	9-8/16	1651.00	241.78
66	9-11/16	1676.40	245.50
67	9-13/16	1701.80	249.22
68	9-15/16	1727.20	252.94
69	10-2/16	1752.60	256.66
70	10-4/16	1778.00	260.38
71	10-6/16	1803.40	264.10
72	10-9/16	1828.80	267.82
73	10-11/16	1854.20	271.54
74	10-13/16	1879.60	275.26
75	11	1905.00	278.98
76	11-2/16	1930.40	282.70
77	11-4/16	1955.80	286.42
78	11-7/16	1981.20	290.14
79	11-9/16	2006.60	293.86
80	11-11/16	2032.00	297.58
81	11-14/16	2057.40	301.30
82	12	2082.80	305.02

Step 4. Position the mounting foot [③] on the fan inlet bell with the offset extending into the bell [①], so that the sensor can be positioned according to the determination made in Step 3.

Step 5. Using the mounting foot as a template, mark the location for the two mounting screws on the fan inlet bell flange, so that the mounting rod [⑤] will be located on the centerline of the fan inlet bell.

ⓘ *Two #10 thread forming screws are included. If providing additional mounting screws, use the same size and type.*

Step 6. Mark the rod where the fan inlet bell flange ends, and the radius begins.

Step 7. If necessary, break off any unused sections from the mounting foot. The sections can be broken away at the grooves.

Step 8. Drill pilot holes using a #21 drill bit (0.159") for the mounting screws [④] at the locations marked in Step 5.

Step 9. Measuring from the mark on the rod that was made in Step 6, position the sensor [⑦] on the rod so that it is centered, according to the determination made in Step 3.

⚠ *The sensor must be installed on the rod before installing assembly on fan.*

⚠ *The sensor must be mounted so that it offsets back into the bell.*

⚠ *Sensor adjustment or replacement needs to be performed with caution. Applying force to the v-grooves after sensor assembly has been installed can fracture the mounting foot and cause failure.*

Step 10. Confirm that the airflow directional arrow is pointing in the direction of the airflow, and the cable is exiting toward the mounting screws.

Step 11. Once centered, align the setscrews in mounting blocks [⑧] with the flats on the rods, and tighten the set screws using the hex wrench provided.

Step 12. Position the probe on the fan inlet bell, and secure with #10 thread forming screws [④] provided.

EBTRON, Inc • 1663 Hwy 701 S., Loris, SC 29569 • Toll Free: 800-2EBTRON (232-8766) • Fax: 843-756-1838 • EBTRON.com

Step 13. Torque the mounting screws to 50 in-lb and confirm the screw head is flat on the mounting foot.

⚠ *Failure to properly install the probe can result in probe and/or fan damage.*

Step 14. Using the tie wraps [⑥] provided secure cable to mounting rod so that it follows the bends, (minimum of two tie wraps per probe).

Step 15. If installing two probes in the fan inlet, repeat Steps 4 to 14, otherwise continue to Step 16.

Step 16. For dual fan inlet or fan array applications, repeat steps above to install probes at the other fan inlet opening(s).

Step 17. Probe installation is complete! Figure “B” shows a completed two probe installation.

EBTRON, Inc • 1663 Hwy 701 S., Loris, SC 29569 • Toll Free: 800-2EBTRON (232-8766) • Fax: 843-756-1838 • EBTRON.com

-B Probe Installation (No Kit Mounting)

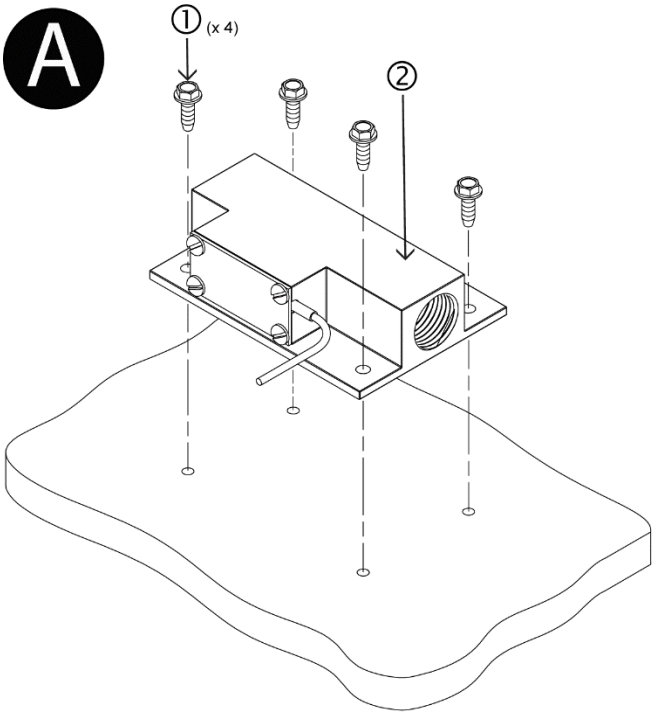

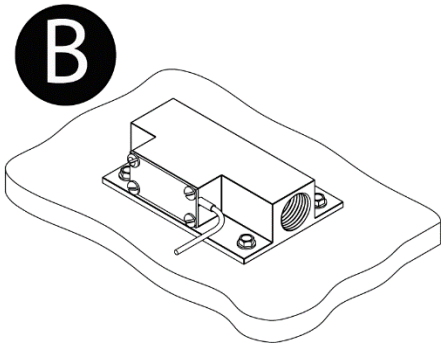

Step 1. Select a location that allows for bleed sensor placement and installation.

ⓘ *It is recommended for the bleed sensor to be installed with the airflow directional arrow pointing in the direction of the normal airflow.*

REFER TO FIGURE “A” WHEN COMPLETING STEPS 2 TO 3.

⚠ *A rain shield or louver (provided by others) must be used to prevent water carry over into the sensor on exterior wall surface applications.*

ⓘ *The bleed sensor features standard 0.5 inch female threads that accept standard 0.5 inch inside diameter NPT fittings. The total length of tubing connected to the sensor must not exceed 36 inches, and the tubing must be a minimum of 0.5 inches inside diameter.*

Step 2. If mounting is required, using the bleed sensor [②] as template; mark and drill four pilot holes at the locations for the four mounting screws [①] (screws not provided).

Step 3. Install tubing and/or fittings as required, observing the precautions and notes above.

ⓘ *Make any provisions necessary so that the cable from the bleed sensor can reach the Ebtron Transmitter.*

Step 4. Bleed sensor installation is complete! Figure “B” shows a completed installation.

EBTRON, Inc • 1663 Hwy 701 S., Loris, SC 29569 • Toll Free: 800-2EBTRON (232-8766) • Fax: 843-756-1838 • EBTRON.com

-B Probe Installation (Damper Mounting)

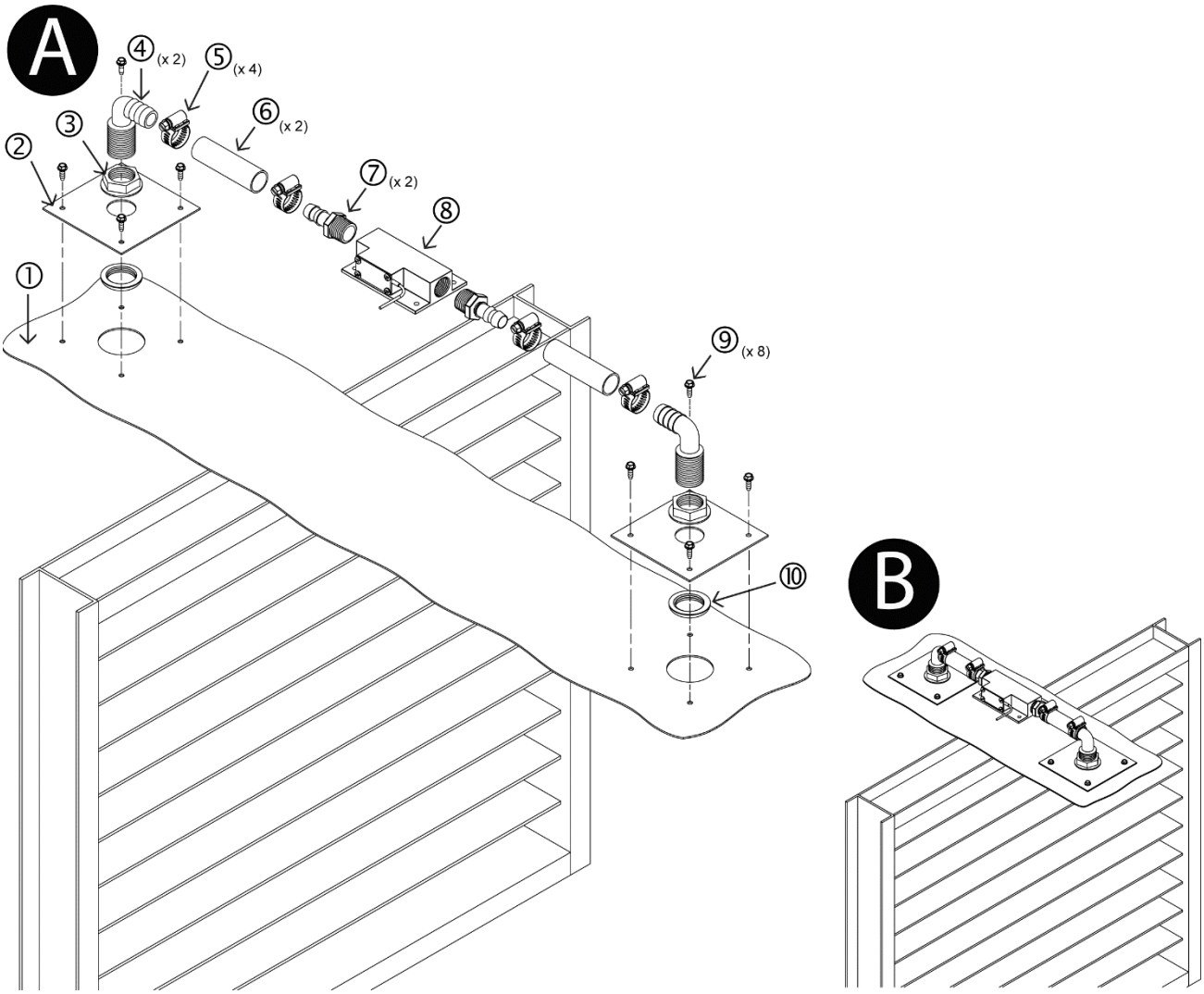

Step 1. Select a location along the duct on both the upstream and downstream side of the damper that allows for the bleed sensor placement and installation.

REFER TO FIGURE “A” WHEN COMPLETING STEPS 2 TO 14.

Step 2. Mark the center of the hole where the right angle hose barb [④] will be attached on the upstream and downstream side of damper, as selected in Step 1.

⚠ *The location for the two holes must be no more than six feet apart.*

Step 3. Using one of the face plates [②] as a template, center over the marks made in Step 2; mark and drill four pilot holes at the locations for the four mounting screws [⑨] (screws not provided).

Step 4. Drill a 2 inch hole at each center-point location marked in Step 2.

Step 5. Assemble the right angle hose barb [④], height adjusting nut [③], face plate [②] and the retaining collar [⑩] for the upstream side.

⚠ *The barbed end of the upstream side right angle hose barb [④] must be pointing in a straight line to the downstream location.*

Step 6. Secure the upstream side face plate [②] with four mounting screws [⑨] (screws not provided) in the pre-drilled holes.

EBTRON, Inc • 1663 Hwy 701 S., Loris, SC 29569 • Toll Free: 800-2EBTRON (232-8766) • Fax: 843-756-1838 • EBTRON.com

Step 7. Assemble the right angle hose barb [④], height adjusting nut [③], face plate [②] and the retaining collar [⑩] for the downstream side.

⚠ *The barbed end of the downstream side right angle hose barb [④] must be pointing in a straight line to the upstream location.*

Step 8. Secure the downstream side face plate [②] with four mounting screws [⑨] (screws not provided) in the pre-drilled holes.

Step 9. Thread the hose barb fittings [⑦] to both sides of the bleed sensor [⑧].

Step 10. Cut upstream side of nylon reinforced tubing [⑥] to correct length for the installation.

Step 11. Secure upstream side of nylon reinforced tubing [⑥] to upstream side of bleed sensor with stainless steel hose clamp [⑤].

Step 12. Cut downstream side of nylon reinforced tubing [⑥] to correct length for your installation.

Step 13. Secure downstream side of nylon reinforced tubing [⑥] to downstream side of bleed sensor with stainless steel hose clamp [⑤].

Step 14. Install the bleed sensor [⑧] so that the airflow directional arrow is pointing in the direction of the airflow, and secure to the right angle hose barbs [④] with stainless steel hose clamps [⑤].

⚠ *Confirm that the nylon reinforced tubing has not been crimped during the process of installation.*

Step 15. Bleed sensor installation is complete! Figure “B” shows a completed installation.

EBTRON, Inc • 1663 Hwy 701 S., Loris, SC 29569 • Toll Free: 800-2EBTRON (232-8766) • Fax: 843-756-1838 • EBTRON.com

-B Probe Installation (Floor Mounting)

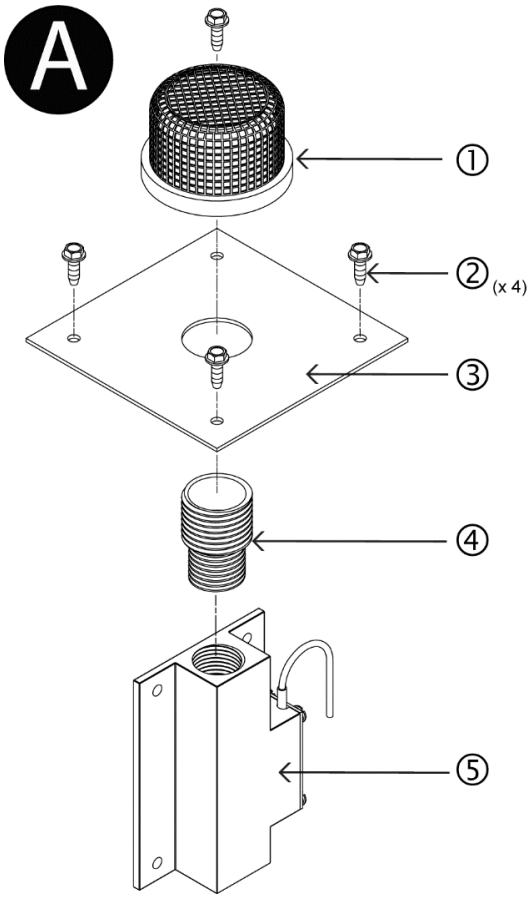

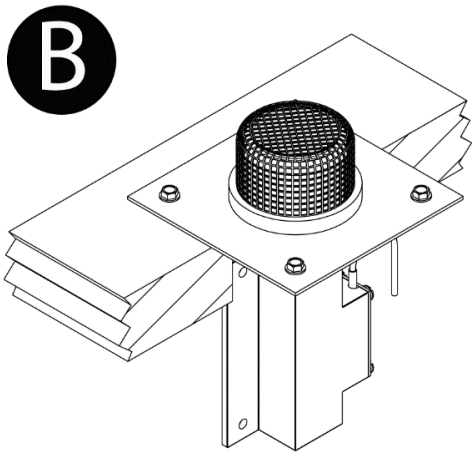

Step 1. Select a low traffic location in the floor that allows for bleed sensor placement and installation.

⚠ *Do not place the protective screen in an expected floor traffic area since it protrudes approximately 1-3/8 inches above the floor surface.*

ⓘ *It is recommended for the bleed sensor to be installed with the airflow directional arrow pointing in the direction of the normal airflow.*

REFER TO FIGURE “A” WHEN COMPLETING STEPS 2 TO 8.

Step 2. Mark the center of where sensor will be installed, as selected in Step 1.

Step 3. Using the face plate [②] as a template, center over the mark made in Step 2; mark and drill four pilot holes at the locations for the four mounting screws [②] (screws not provided).

Step 4. Drill a 3 inch hole at the center-point marked in Step 2.

Step 5. Thread the reducer fitting [④] into the downstream side of the bleed sensor [⑤].

Step 6. Position the face plate [③] over the reducer fitting [④] and secure in place with protective mesh screen [①].

Step 7. Lower the bleed sensor [⑤] into the hole drilled in Step 4.

ⓘ *Make any provisions necessary so that the cable from the bleed sensor can reach the Ebtron Transmitter.*

Step 8. Secure the face plate [③] to the floor with four mounting screws [②] (screws not provided).

Step 9. Bleed sensor installation is complete! Figure “B” shows a completed installation.

EBTRON, Inc • 1663 Hwy 701 S., Loris, SC 29569 • Toll Free: 800-2EBTRON (232-8766) • Fax: 843-756-1838 • EBTRON.com

-B Probe Installation (Wall Mounting)

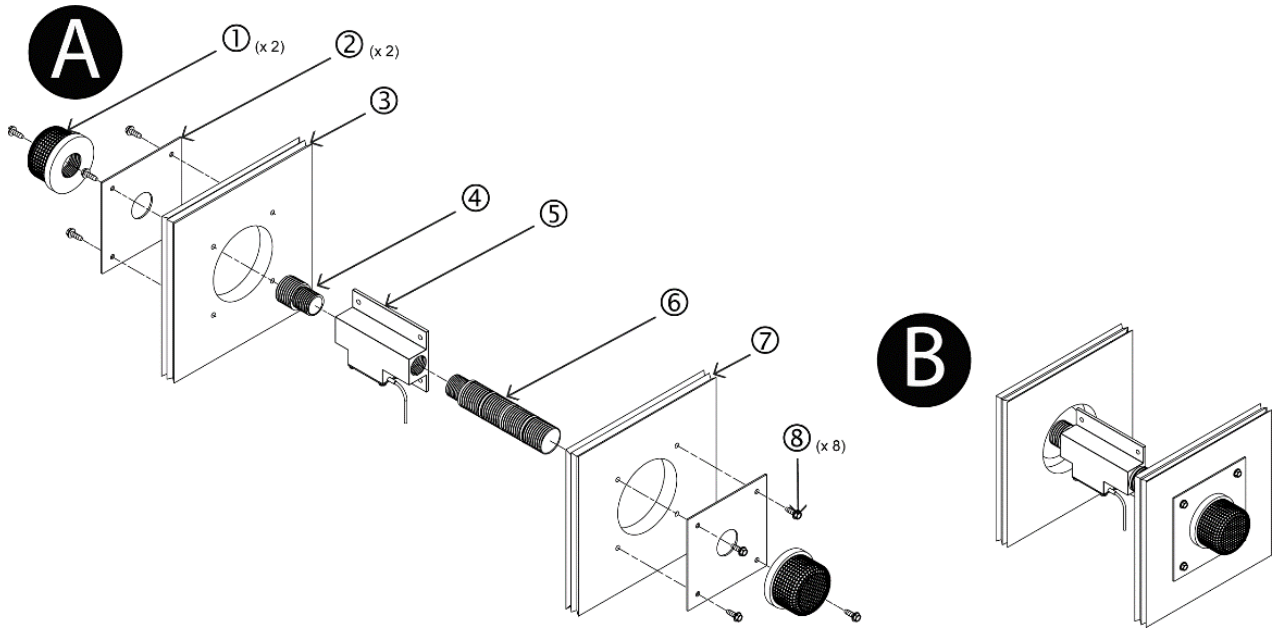

Step 1. Select a location along the wall that allows for bleed sensor placement and installation.

The wall mounting kit is designed for mounting through the wall between adjacent spaces with wall thickness of 5 to 8 inches.

It is recommended for the bleed sensor to be installed with the airflow directional arrow pointing in the direction of the normal airflow between adjacent spaces.

On exterior wall surface applications, a rain shield or louver (provided by others) must be used to prevent water carry over into the sensor.

REFER TO FIGURE "A" WHEN COMPLETING STEPS 2 TO 12.

Step 2. Mark the center-point of where bleed sensor [⑤] will be installed on both the upstream wall [③] and downstream wall [⑦], as selected in Step 1.

Step 3. Using one of the face plates [②] as a template, center over the marks made in Step 2; mark and drill four pilot holes at the locations for the four mounting screws [⑧] (screws not provided).

Step 4. Drill a 3 inch hole at both center-points marked in Step 2.

Step 5. Secure the face plate [②] to the upstream side of the wall [③] with four mounting screws [⑧] (screws not provided) in the pre-drilled holes.

Step 6. Thread the reducer fitting [④] into the upstream side of the bleed sensor [⑤].

Step 7. Determine correct length of cut-off extension [⑥], and trim if necessary.

Step 8. Thread the cut-off extension [⑥] into the downstream side of the bleed sensor [⑤].

Step 9. Feed the bleed sensor [⑤] in from the downstream side of the wall [⑦], and feed reducer fitting [④] threads through face plate [②] mounted on upstream wall [③].

Step 10. Secure protective mesh screen [①] to reducer fitting [④] on the upstream side of wall [③].

Make any provisions necessary so that the cable from the bleed sensor can reach the Ebtron Transmitter.

EBTRON, Inc • 1663 Hwy 701 S., Loris, SC 29569 • Toll Free: 800-2EBTRON (232-8766) • Fax: 843-756-1838 • EBTRON.com

Step 11. Position the face plate [②] over the threads of the cut-off extension [⑥], and secure to the downstream side of the wall [⑦] with four mounting screws [⑧] (screws not provided) in the pre-drilled holes

Step 12. Secure protective mesh screen [①] to cut-off extension [⑥] on the downstream side of wall [⑦].

Step 13. Bleed sensor installation is complete! Figure “B” shows a completed installation.

EBTRON, Inc • 1663 Hwy 701 S., Loris, SC 29569 • Toll Free: 800-2EBTRON (232-8766) • Fax: 843-756-1838 • EBTRON.com

Appendix C

Transmitter Installation Guides

Advantage IV Gold Series Transmitter Installation

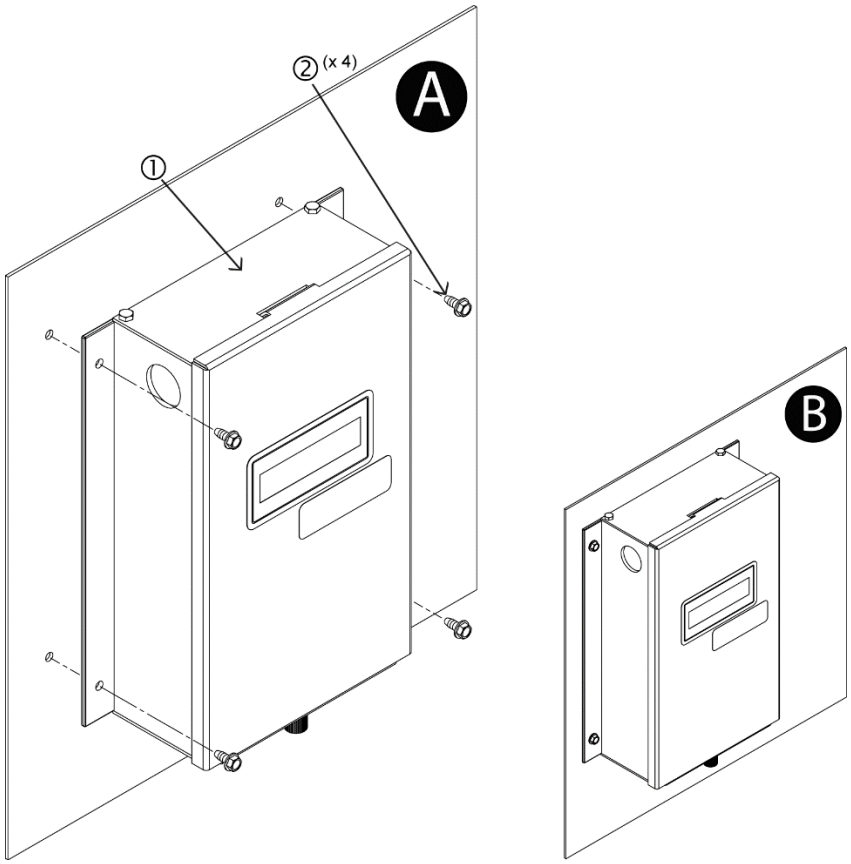

Step 1. Locate a position for the transmitter so that the connecting cables from all of the sensor probes will reach the receptacles on the bottom of the transmitter enclosure.

⚠ *Provide a minimum of 3 inches [76 mm] below all transmitters to connect cable plugs from the sensor probes.*

⚠ *Mount transmitters in a location protected from moisture, rain and snow with an ambient temperature between -20 and 120 °F [-28.9 to 48.9 °C]. Provide a weatherproof enclosure and mount away from direct sunlight when outdoor mounting is required.*

⚠ *Transmitters have an LCD and four-button user interface. Select a mounting location where the LCD and pushbutton interface are accessible during normal operation. The cover of the Advantage IV Gold Series transmitter hinges up for removal.*

REFER TO FIGURE “A” WHEN COMPLETING STEP 2 to 4.

Step 2. Use the transmitter [①] as a template to locate and mark the position for the four mounting screws [②].

Step 3. Drill appropriately sized pilot holes for each mounting screw [②] location marked in Step 2.

Step 4. Secure the transmitter to the mounting surface with four mounting screws selected [②].

Step 5. Transmitter installation is complete! Figure “B” shows a completed transmitter installation.

ⓘ *Refer to the applicable Wiring Guide prior to making any wiring connections.*

EBTRON, Inc • 1663 Hwy 701 S., Loris, SC 29569 • Toll Free: 800-2EBTRON (232-8766) • Fax: 843-756-1838 • EBTRON.com

Advantage IV Hybrid Series Transmitter Installation

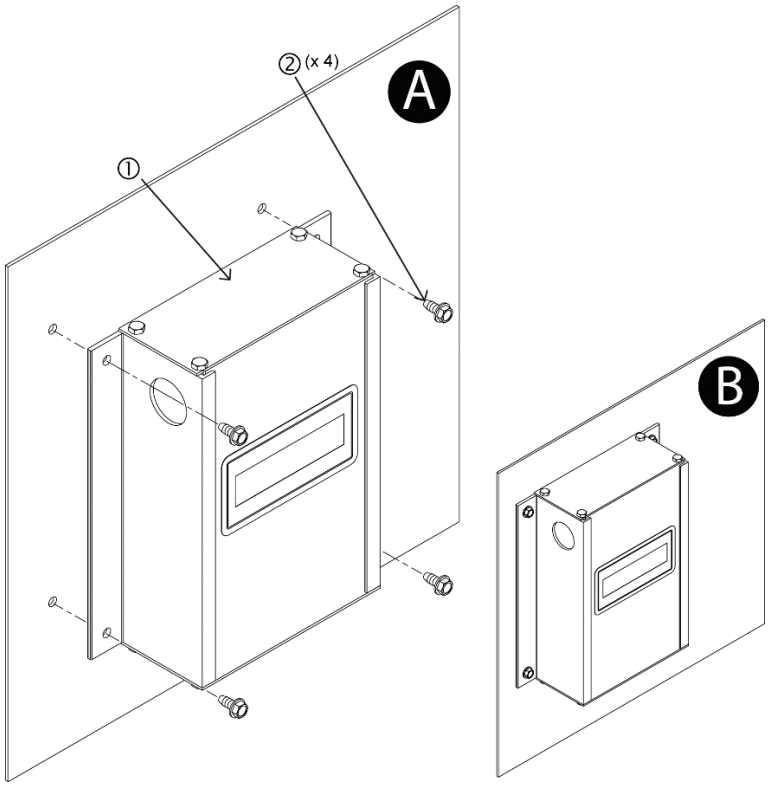

Step 1. Locate a position for the transmitter so that the connecting cables from all of the sensor probes will reach the receptacles on the bottom of the transmitter enclosure.

⚠ *Provide a minimum of 6.5 inches [165 mm] above Hybrid Series transmitters to allow for cover removal when slide out covers are provided.*

⚠ *Provide a minimum of 3 inches [76 mm] below all transmitters to connect cable plugs from the sensor probes.*

⚠ *Mount transmitters in a location protected from moisture, rain and snow with an ambient temperature between -20 and 120 °F [-28.9 to 48.9 °C]. Provide a weatherproof enclosure and mount away from direct sunlight when outdoor mounting is required.*

⚠ *Transmitters have an LCD and four-button user interface. Select a mounting location where the LCD and pushbutton interface are accessible during normal operation. The cover of the Advantage IV Hybrid Series transmitter slides up and out of the enclosure.*

REFER TO FIGURE “A” WHEN COMPLETING STEP 2 to 4.

Step 2. Use the transmitter [①] as a template to locate and mark the position for the four mounting screws [②].

Step 3. Drill appropriately sized pilot holes for each mounting screw [②] location marked in Step 2.

Step 4. Secure the transmitter to the mounting surface with four mounting screws selected [②].

Step 5. Transmitter installation is complete! Figure “B” shows a completed transmitter installation.

ⓘ *Refer to the applicable Wiring Guide prior to making any wiring connections.*

EBTRON, Inc • 1663 Hwy 701 S., Loris, SC 29569 • Toll Free: 800-2EBTRON (232-8766) • Fax: 843-756-1838 • EBTRON.com

EB-FlowII EF-x2000 Series Transmitter Installation

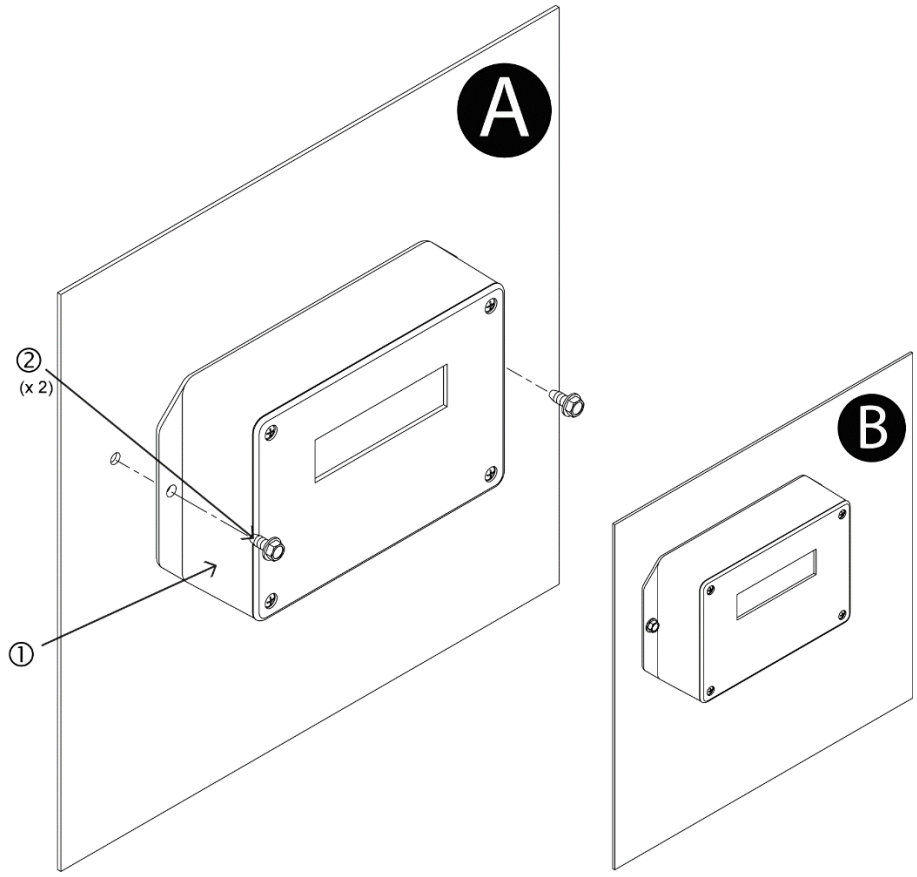

Step 1. Locate a position for the transmitter so that the connecting cables from all of the sensor probes will reach the receptacles on the bottom of the transmitter enclosure.

⚠ *Provide a minimum of 3 inches [76 mm] below all transmitters to connect cable plugs from the sensor probes.*

⚠ *Mount transmitters in a location protected from moisture, rain and snow with an ambient temperature between -20 and 120 °F [-28.9 to 48.9 °C]. Provide a weatherproof enclosure and mount away from direct sunlight when outdoor mounting is required.*

⚠ *Transmitters have an LCD and four-button user interface. Select a mounting location where the LCD and pushbutton interface are accessible during normal operation. The cover of the EB-FlowII EF-x2000 series transmitter is secured by four #1 Philips head screws.*

REFER TO FIGURE “A” WHEN COMPLETING STEP 2 to 4.

Step 2. Use the transmitter [①] as a template to locate and mark the position for the two mounting screws [②].

Step 3. Drill appropriately sized pilot holes for each mounting screw [②] location marked in Step 2.

Step 4. Secure the transmitter to the mounting surface with two mounting screws selected [②].

Step 5. Transmitter installation is complete! Figure “B” shows a completed transmitter installation.

ⓘ *Refer to the applicable Wiring Guide prior to making any wiring connections.*

EBTRON, Inc • 1663 Hwy 701 S., Loris, SC 29569 • Toll Free: 800-2EBTRON (232-8766) • Fax: 843-756-1838 • EBTRON.com

Appendix D
Wiring Guides

Advantage IV (A4) GTA116e-P WIRING GUIDE

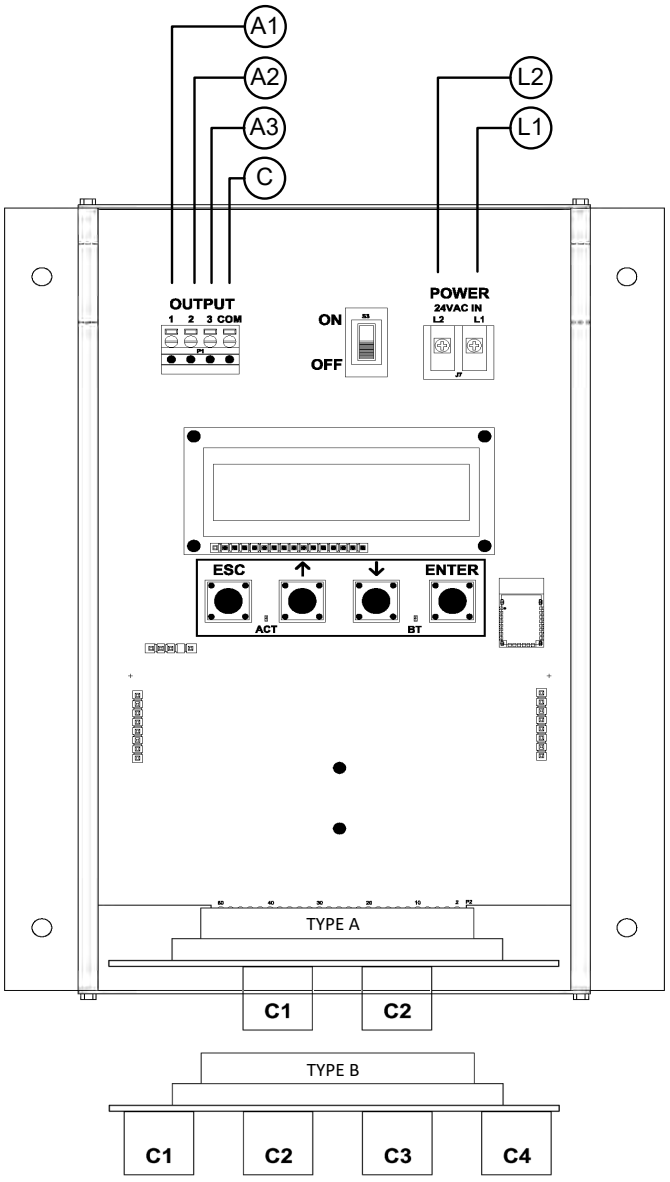

TRANSMITTER CONNECTIONS

Power		Analog Out (isolated)				Type	
L1	L2	A1	A2	A3	C	A	B
24 VAC (hot)	24 VAC (neutral)	Airflow +	Temperature or Alarm +	Psychrometric Property+	Signal Common	2 probes x 8 sensors/probe	4 probes x 4 sensors/probe

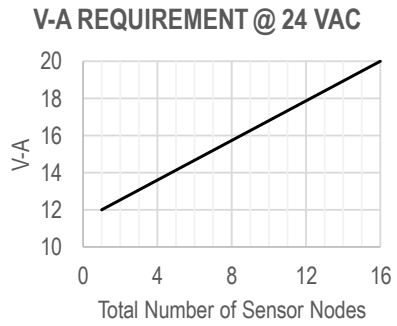

INSTRUCTIONS TO INSTALLER:

1. Mount the transmitter in a location where all probe cables can reach the receptacles of the transmitter. Provide a weatherproof enclosure (by others) and mount away from direct sunlight when outdoor mounting is required.
2. Connect the sensor probes to the transmitter. Although probes are "plug and play" and connections to specific receptacles are not required, it is recommended that probes are connected Probe 1 to receptacle C1, Probe 2 to receptacle C2, etc. Probe numbers are indicated on each cable hang tag.

ⓘ *Cables have an FEP plenum rated jacket that are UV tolerant and suitable for operation over the entire operating temperature range of the device.*

⚠ *Sensor probe plugs are keyed and NOT twist-lock. Align the key and push the plug onto the transmitter receptacle. Twisting may damage the connector pins.*

3. Select a 24 VAC transformer that provides 22.8 to 26.4 VAC during operation. Refer to the chart above to optimize the transformer size or size the transformer for 20 V-A for each measurement location.

⚠ *Multiple transmitters wired to a single transformer must be wired "in-phase" (L1 to L1 and L2 to L2).*

4. If analog output signals are used, continue to step 5, otherwise skip to step 6.
5. Connect each analog output signal required to the host B.A.S. using shielded twisted-pair wire. Properly terminate the shield (typically at the B.A.S.).

ⓘ *AO3 (relative humidity, enthalpy, or dew point) is only available if the /H humidify sensor option is provided.*

⚠ *If twisted pair wire and/or shielded cable is not used, extraneous electrical noise can be picked up between the transmitter and host control panel.*

6. Refer to the *GTA116e-P Startup Guide* prior to moving the power switch to the "ON" position.

Advantage IV (A4) GTB116-P WIRING GUIDE

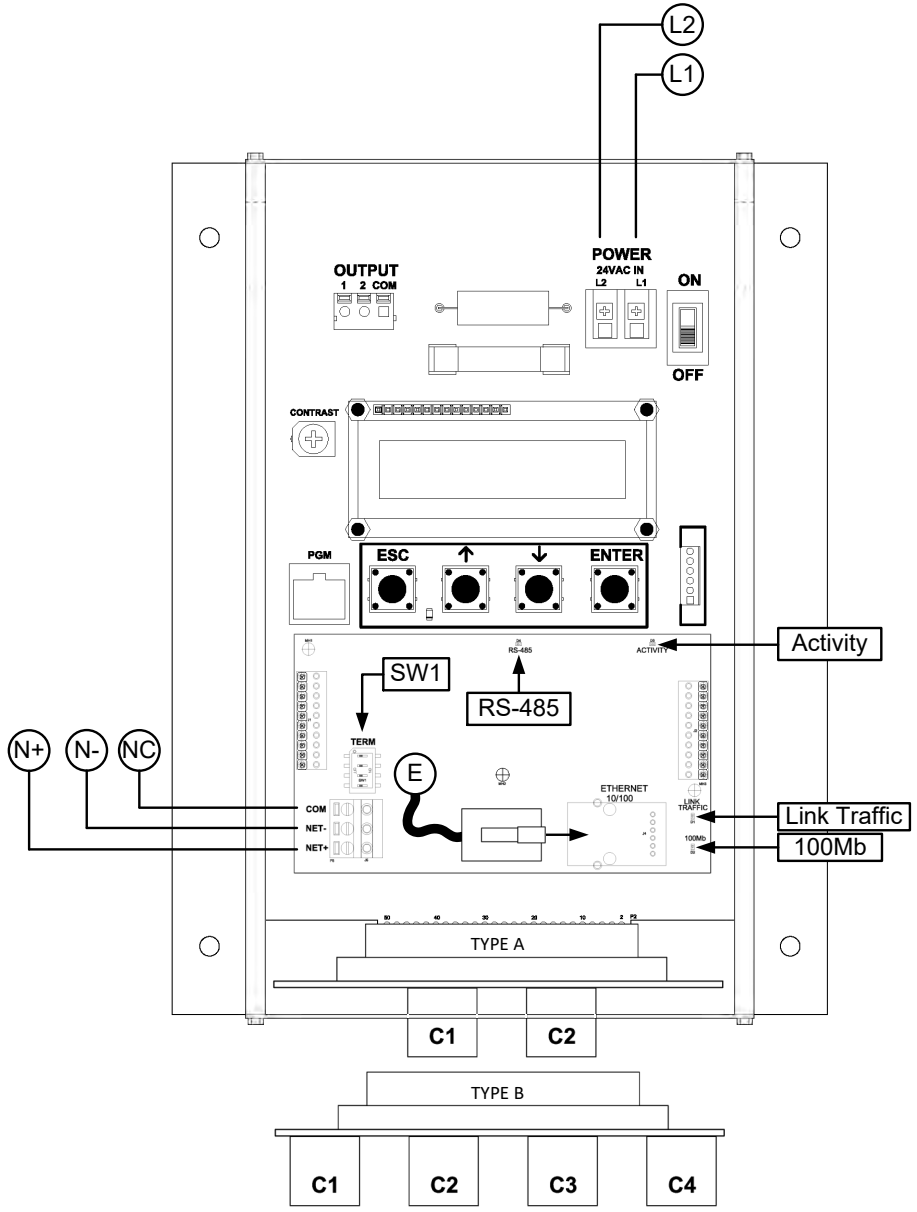

TRANSMITTER CONNECTIONS

Power		RS-485 (isolated)			Ethernet	Type	
L1	L2	N+	N-	NC	E	A	B
24 VAC (hot)	24 VAC (neutral)	Network +	Network -	Network Common	RJ-45 CAT5 or greater	2 probes x 8 sensors/probe	4 probes x 4 sensors/probe

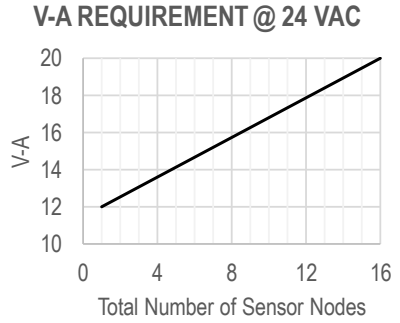

INSTRUCTIONS TO INSTALLER:

1. Mount the transmitter in a location where all probe cables can reach the receptacles of the transmitter. Provide a weatherproof enclosure (by others) and mount away from direct sunlight when outdoor mounting is required.
2. Connect the sensor probes to the transmitter. Although probes are "plug and play" and connections to specific receptacles are not required, it is recommended that probes are connected Probe 1 to receptacle C1, Probe 2 to receptacle C2, etc. Probe numbers are indicated on each cable hang tag.

ⓘ *Cables have an FEP plenum rated jacket that are UV tolerant and suitable for operation over the entire operating temperature range of the device.*

⚠ *Sensor probe plugs are keyed and NOT twist-lock. Align the key and push the plug onto the transmitter receptacle. Twisting may damage the connector pins.*

3. Select a 24 VAC transformer that provides 22.8 to 26.4 VAC during operation. Refer to the chart above to optimize the transformer size or size the transformer for 20 V-A for each measurement location.

⚠ *Multiple transmitters wired to a single transformer must be wired "in-phase" (L1 to L1 and L2 to L2).*

4. If the RS-485 connection is required continue to step 5, otherwise skip to step 7.
5. Connect to an RS-485 network (BACnet MS/TP or Modbus RTU), if required, using a 3-conductor network cable meeting the corresponding BACnet or Modbus standards. Ensure that all three connections, N+, N- and NC are connected.

⚠ *If a 2-conductor network cable or other non-conforming cable is used, network speed, length and reliability may be compromised or network failure may occur.*

6. If the transmitter is the first device on the network run, configure SW1 on the output card for "failsafe-bias". If the transmitter is the last device on the network run, configure SW1 for "end-of-line". Otherwise, configure SW1 for no termination (default).

SW1 - RS-485 TERMINATION DIP SWITCH POSITIONS				
1	2	3	4	TERMINATION
OFF	OFF	OFF	OFF	No termination (default)
OFF	ON	ON	OFF	End of Line
ON	OFF	OFF	ON	Fail-Safe Bias

7. If the Ethernet connection is required continue to step 8, otherwise skip to step 9.
8. Connect to an Ethernet network (BACnet Ethernet, BACnet IP, Modbus TCP or TCP/IP), if required,

using a standard RJ-45 terminated Ethernet cable, CAT5 or greater.

⚠ *Use of improperly wired RJ-45 connectors may damage the Ethernet output circuit of the transmitter.*

ⓘ *The output connector terminal block on the top left side of the main circuit board is not used with this output configuration.*

9. Refer to the *GTB116-P Startup Guide* prior to moving the power switch to the “ON” position.

Advantage IV (A4) GTC116-P WIRING GUIDE

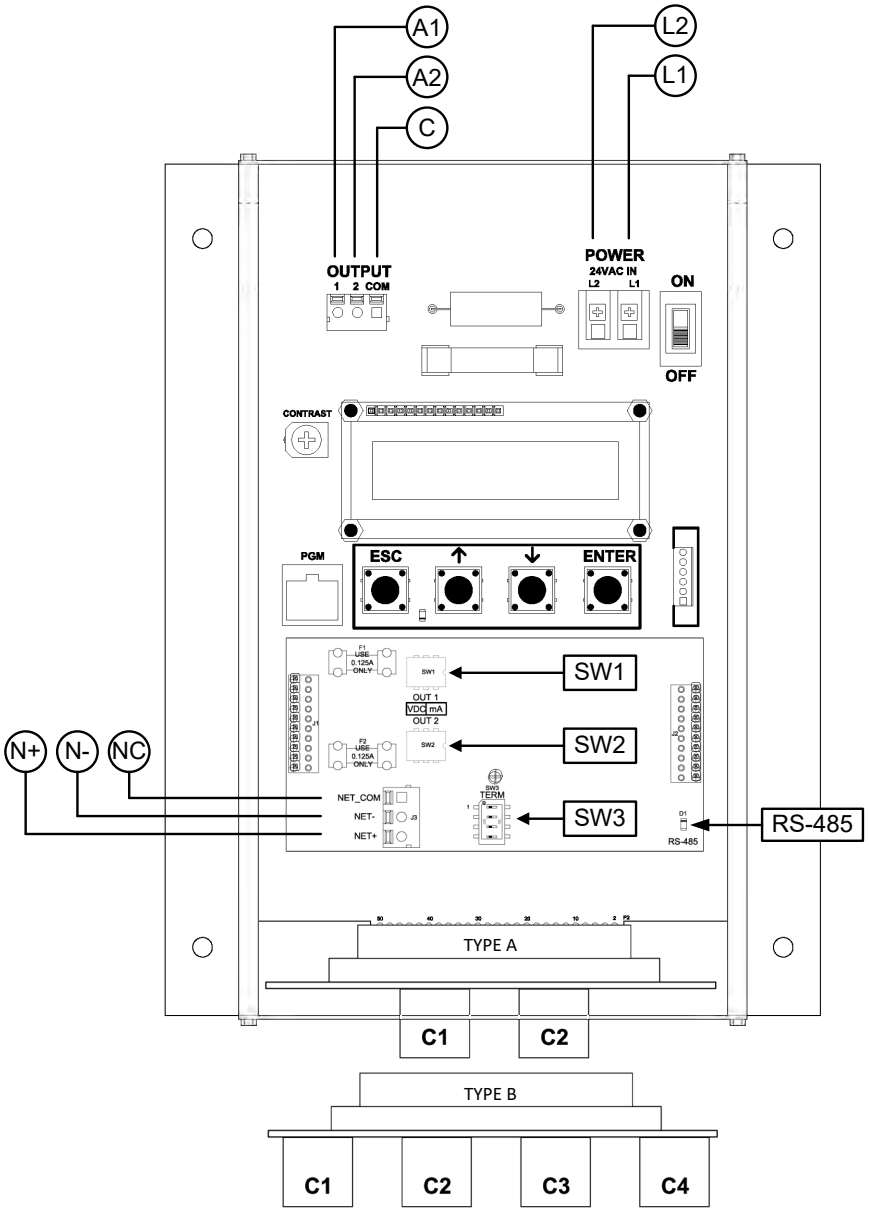

TRANSMITTER CONNECTIONS

Power		Analog Out (isolated)			RS-485 (isolated)			Type	
L1	L2	A1	A2	C	N+	N-	NC	A	B
24 VAC (hot)	24 VAC (neutral)	Airflow +	Temperature or Alarm +	Signal Common	Network +	Network -	Network Common	2 probes x 8 sensors/probe	4 probes x 4 sensors/probe

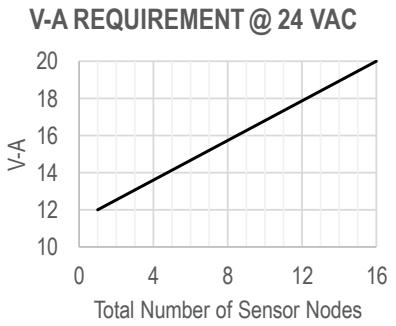

INSTRUCTIONS TO INSTALLER:

1. Mount the transmitter in a location where all probe cables can reach the receptacles of the transmitter. Provide a weatherproof enclosure (by others) and mount away from direct sunlight when outdoor mounting is required.
2. Connect the sensor probes to the transmitter. Although probes are "plug and play" and connections to specific receptacles are not required, it is recommended that probes are connected Probe 1 to receptacle C1, Probe 2 to receptacle C2, etc. Probe numbers are indicated on each cable hang tag.

ⓘ *Cables have an FEP plenum rated jacket that are UV tolerant and suitable for operation over the entire operating temperature range of the device.*

⚠ *Sensor probe plugs are keyed and NOT twist-lock. Align the key and push the plug onto the transmitter receptacle. Twisting may damage the connector pins.*

3. Select a 24 VAC transformer that provides 22.8 to 26.4 VAC during operation. Refer to the chart above to optimize the transformer size or size the transformer for 20 V-A for each measurement location.

⚠ *Multiple transmitters wired to a single transformer must be wired "in-phase" (L1 to L1 and L2 to L2).*

4. If analog output signals are used, continue to step 5, otherwise skip to step 6.
5. Connect each analog output signal required to the host B.A.S. using shielded twisted-pair wire. Properly terminate the shield (typically at the B.A.S.).

⚠ *If twisted pair wire and/or shielded cable is not used, extraneous electrical noise can be picked up between the transmitter and host control panel.*

6. If the RS-485 connection is required continue to step 7, otherwise skip to step 9.
7. Connect to an RS-485 network (BACnet MS/TP or Modbus RTU), if required, using a 3-conductor network cable meeting the corresponding BACnet or Modbus standards. Ensure that all three connections, N+, N- and NC are connected.

⚠ *If a 2-conductor network cable or other non-conforming cable is used, network speed, length and reliability may be compromised or network failure may occur.*

8. If the transmitter is the first device on the network run, configure SW3 on the output card for "failsafe-bias". If the transmitter is the last device on the network run, configure SW3 for "end-of-line". Otherwise, configure SW3 for no termination (default).

SW3 - RS-485 TERMINATION DIP SWITCH POSITIONS				
1	2	3	4	TERMINATION
OFF	OFF	OFF	OFF	No termination (default)
OFF	ON	ON	OFF	End of Line
ON	OFF	OFF	ON	Fail-Safe Bias

9. Refer to the *GTC116-P Startup Guide* prior to moving the power switch to the "ON" position.

Advantage IV (A4) GTC116e-P WIRING GUIDE

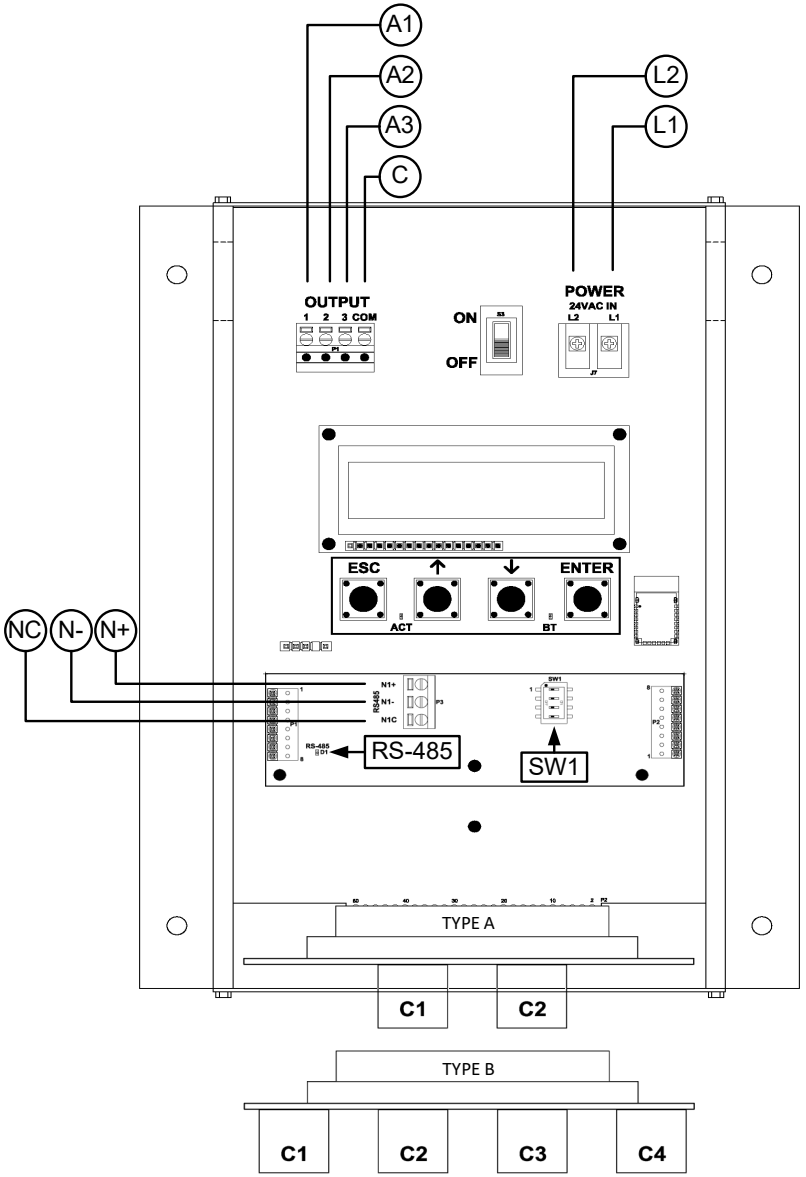

TRANSMITTER CONNECTIONS

Power		Analog Out (isolated)				RS-485 (isolated)			Type	
L1	L2	A1	A2	A3	C	N+	N-	NC	A	B
24 VAC (hot)	24 VAC (neutral)	Airflow +	Temperature or Alarm +	Psychrometric Property +	Signal Common	Network +	Network -	Network Common	2 probes x 8 sensors/probe	4 probes x 4 sensors/probe

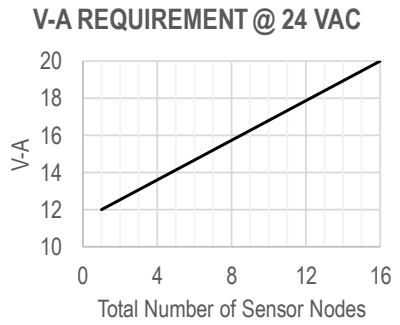

INSTRUCTIONS TO INSTALLER:

1. Mount the transmitter in a location where all probe cables can reach the receptacles of the transmitter. Provide a weatherproof enclosure (by others) and mount away from direct sunlight when outdoor mounting is required.
2. Connect the sensor probes to the transmitter. Although probes are "plug and play" and connections to specific receptacles are not required, it is recommended that probes are connected Probe 1 to receptacle C1, Probe 2 to receptacle C2, etc. Probe numbers are indicated on each cable hang tag.

ⓘ *Cables have an FEP plenum rated jacket that are UV tolerant and suitable for operation over the entire operating temperature range of the device.*

⚠ *Sensor probe plugs are keyed and NOT twist-lock. Align the key and push the plug onto the transmitter receptacle. Twisting may damage the connector pins.*

3. Select a 24 VAC transformer that provides 22.8 to 26.4 VAC during operation. Refer to the chart above to optimize the transformer size or size the transformer for 20 V-A for each measurement location.

⚠ *Multiple transmitters wired to a single transformer must be wired "in-phase" (L1 to L1 and L2 to L2).*

4. If analog output signals are used, continue to step 5, otherwise skip to step 6.
5. Connect each analog output signal required to the host B.A.S. using shielded twisted-pair wire. Properly terminate the shield (typically at the B.A.S.).

ⓘ *AO3 (relative humidity, enthalpy, or dew point) is only available if the /H humidify sensor option is provided.*

⚠ *If twisted pair wire and/or shielded cable is not used, extraneous electrical noise can be picked up between the transmitter and host control panel.*

6. If the RS-485 connection is required continue to step 7, otherwise skip to step 9.
7. Connect to an RS-485 network (BACnet MS/TP or Modbus RTU), if required, using a 3-conductor network cable meeting the corresponding BACnet or Modbus standards. Ensure that all three connections, N+, N- and NC are connected.

⚠ *If a 2-conductor network cable or other non-conforming cable is used, network speed, length and reliability may be compromised or network failure may occur.*

8. If the transmitter is the first device on the network run, configure SW1 on the output card for “failsafe-bias”. If the transmitter is the last device on the network run, configure SW1 for “end-of-line”. Otherwise, configure SW1 for no termination (default).

SW1 - RS-485 TERMINATION DIP SWITCH POSITIONS				
1	2	3	4	TERMINATION
OFF	OFF	OFF	OFF	No termination (default)
OFF	ON	ON	OFF	End of Line
ON	OFF	OFF	ON	Fail-Safe Bias

9. Refer to the *GTC116e-P Startup Guide* prior to moving the power switch to the “ON” position.

Advantage IV (A4) GTD116-P WIRING GUIDE

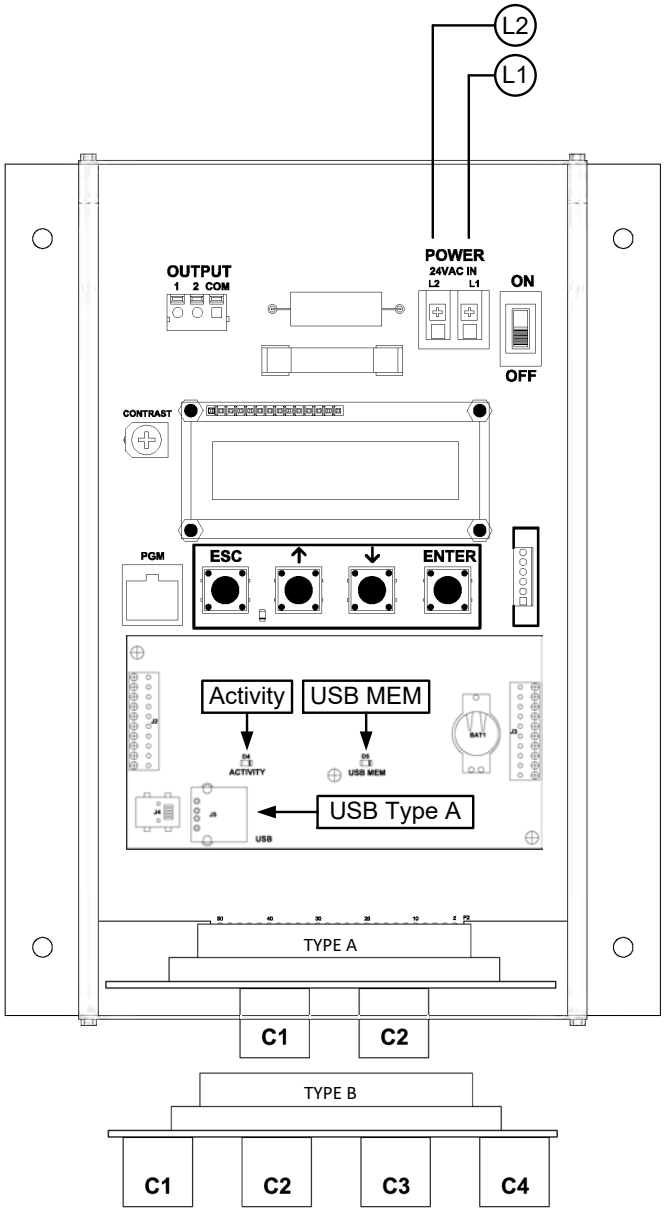

TRANSMITTER CONNECTIONS

Power		Type	
L1	L2	A	B
24 VAC (hot)	24 VAC (neutral)	2 probes x 8 sensors/probe	4 probes x 4 sensors/probe

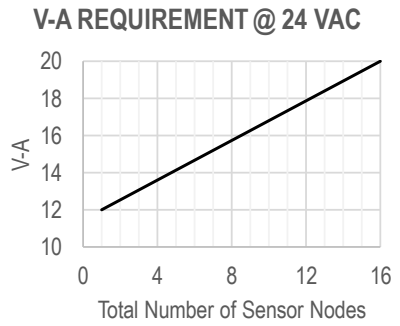

INSTRUCTIONS TO INSTALLER:

1. Mount the transmitter in a location where all probe cables can reach the receptacles of the transmitter. Provide a weatherproof enclosure (by others) and mount away from direct sunlight when outdoor mounting is required.
2. Connect the sensor probes to the transmitter. Although probes are "plug and play" and connections to specific receptacles are not required, it is recommended that probes are connected Probe 1 to receptacle C1, Probe 2 to receptacle C2, etc. Probe numbers are indicated on each cable hang tag.

ⓘ *Cables have an FEP plenum rated jacket that are UV tolerant and suitable for operation over the entire operating temperature range of the device.*

⚠ *Sensor probe plugs are keyed and NOT twist-lock. Align the key and push the plug onto the transmitter receptacle. Twisting may damage the connector pins.*

3. Select a 24 VAC transformer that provides 22.8 to 26.4 VAC during operation. Refer to the chart above to optimize the transformer size or size the transformer for 20 V-A for each measurement location.

⚠ *Multiple transmitters wired to a single transformer must be wired "in-phase" (L1 to L1 and L2 to L2).*

4. Install and properly seat a USB memory device ("thumb drive") into the USB Type A connector on the option card.

It is a good practice to verify the transmitter power switch is in in the "OFF" position before inserting or removing the USB memory device..

⚠ *Always set the USB WRITE parameter to "OFF" before removing the USB memory device to avoid data loss/and or damage..*

5. Refer to the *GTD116-P Startup Guide* prior to moving the power switch to the "ON" position.

.

Advantage IV (A4) GTF116e-P WIRING GUIDE

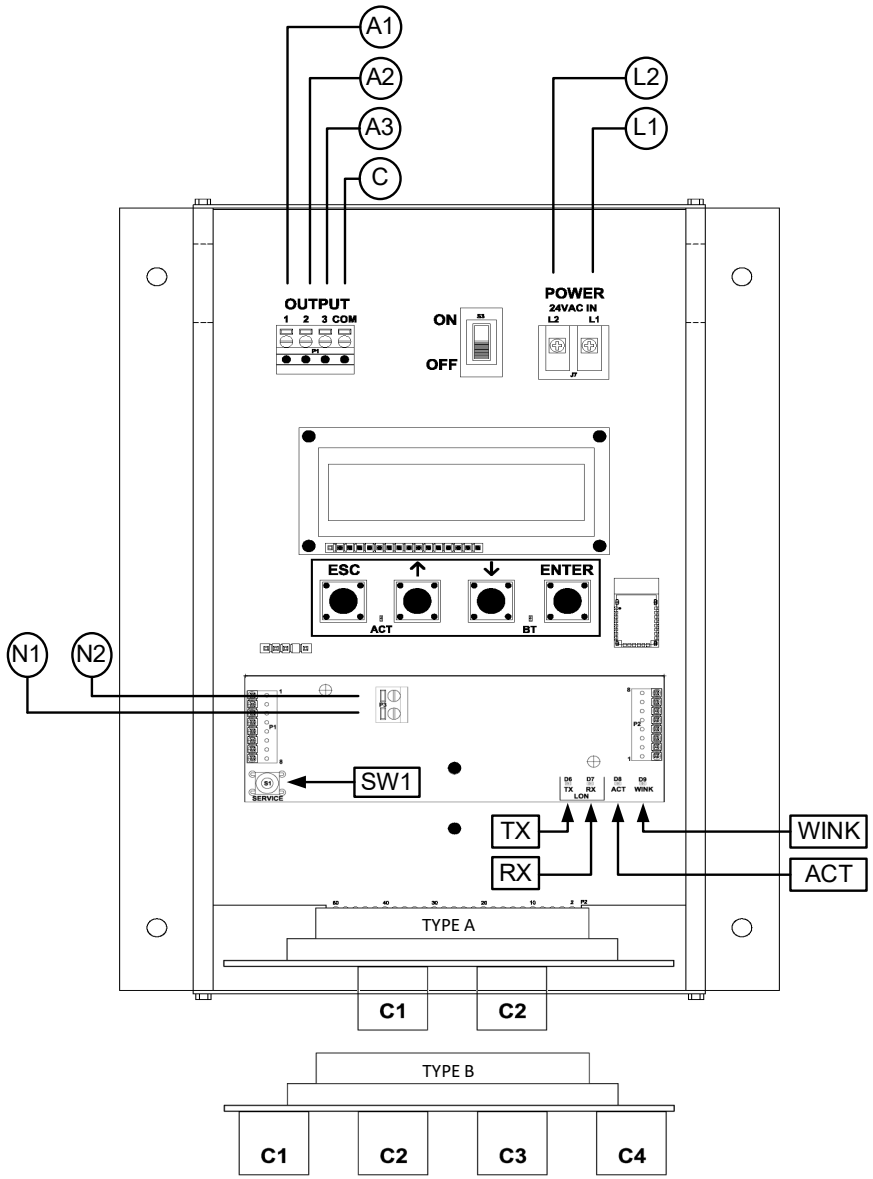

TRANSMITTER CONNECTIONS

Power		Analog Out (isolated)				Lon Network		Type	
L1	L2	A1	A2	A3	C	N1	N2	A	B
24 VAC (hot)	24 VAC (neutral)	Airflow +	Temperature or Alarm +	Psychrometric Property +	Signal Common	Network Pair (1 of 2)	Network Pair (2 of 2)	2 probes x 8 sensors/probe	4 probes x 4 sensors/probe

V-A REQUIREMENT @ 24 VAC

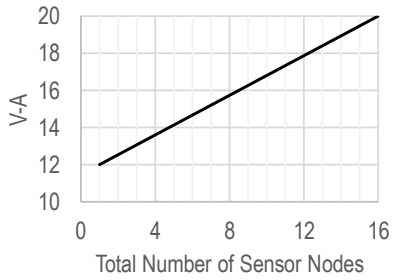

INSTRUCTIONS TO INSTALLER:

1. Mount the transmitter in a location where all probe cables can reach the receptacles of the transmitter. Provide a weatherproof enclosure (by others) and mount away from direct sunlight when outdoor mounting is required.
2. Connect the sensor probes to the transmitter. Although probes are "plug and play" and connections to specific receptacles are not required, it is recommended that probes are connected Probe 1 to receptacle C1, Probe 2 to receptacle C2, etc. Probe numbers are indicated on each cable hang tag.

ⓘ *Cables have an FEP plenum rated jacket that are UV tolerant and suitable for operation over the entire operating temperature range of the device.*

⚠ *Sensor probe plugs are keyed and NOT twist-lock. Align the key and push the plug onto the transmitter receptacle. Twisting may damage the connector pins.*

3. Select a 24 VAC transformer that provides 22.8 to 26.4 VAC during operation. Refer to the chart above to optimize the transformer size or size the transformer for 20 V-A for each measurement location.

⚠ *Multiple transmitters wired to a single transformer must be wired "in-phase" (L1 to L1 and L2 to L2).*

4. If analog output signals are used, continue to step 5, otherwise skip to step 6.
5. Connect each analog output signal required to the host B.A.S. using shielded twisted-pair wire. Properly terminate the shield (typically at the B.A.S.).

ⓘ *AO3 (relative humidity, enthalpy, or dew point) is only available if the /H humidify sensor option is provided.*

⚠ *If twisted pair wire and/or shielded cable is not used, extraneous electrical noise can be picked up between the transmitter and host control panel.*

6. If the LON network connection is required continue to step 7 otherwise skip to 8
7. Connect to a LonWorks Free Topology network.

ⓘ *The network termination is polarity insensitive.*

⚠ *Use the network cable specified by Echelon (typically Belden 8471 cable or equivalent).*

8. Refer to the *GTF116e-P Startup Guide* prior to moving the power switch to the "ON" position.

.

Advantage IV (A4) GTL116-P WIRING GUIDE

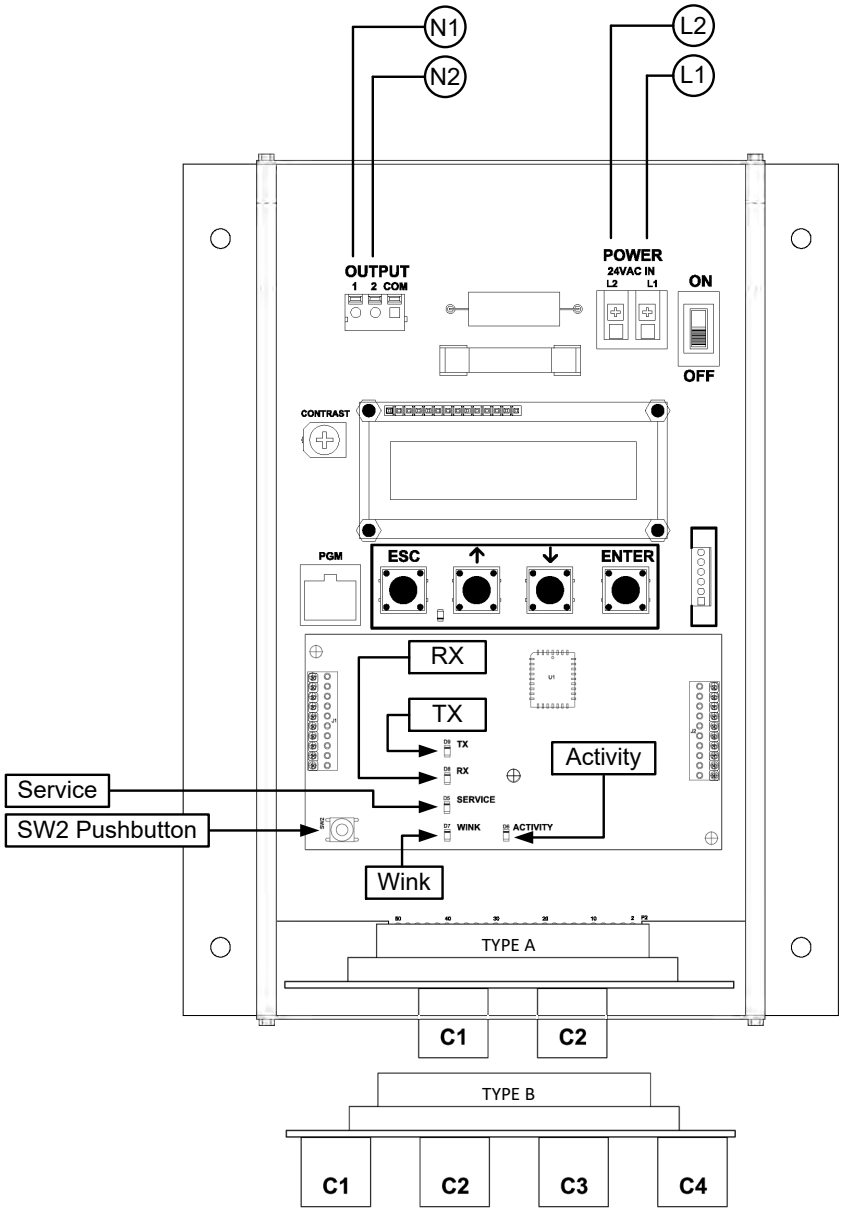

TRANSMITTER CONNECTIONS

Power		Lon Network		Type	
L1	L2	N1	N2	A	B
24 VAC (hot)	24 VAC (neutral)	Network Pair (1 of 2)	Network Pair (2 of 2)	2 probes x 8 sensors/probe	4 probes x 4 sensors/probe

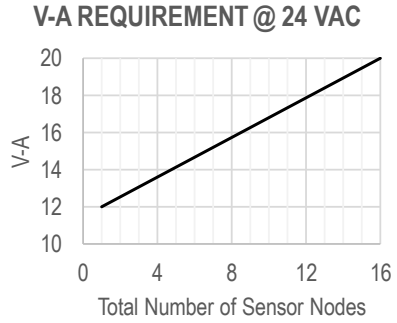

INSTRUCTIONS TO INSTALLER:

1. Mount the transmitter in a location where all probe cables can reach the receptacles of the transmitter. Provide a weatherproof enclosure (by others) and mount away from direct sunlight when outdoor mounting is required.
2. Connect the sensor probes to the transmitter. Although probes are "plug and play" and connections to specific receptacles are not required, it is recommended that probes are connected Probe 1 to receptacle C1, Probe 2 to receptacle C2, etc. Probe numbers are indicated on each cable hang tag.

ⓘ *Cables have an FEP plenum rated jacket that are UV tolerant and suitable for operation over the entire operating temperature range of the device.*

⚠ *Sensor probe plugs are keyed and NOT twist-lock. Align the key and push the plug onto the transmitter receptacle. Twisting may damage the connector pins.*

3. Select a 24 VAC transformer that provides 22.8 to 26.4 VAC during operation. Refer to the chart above to optimize the transformer size or size the transformer for 20 V-A for each measurement location.

⚠ *Multiple transmitters wired to a single transformer must be wired "in-phase" (L1 to L1 and L2 to L2).*

4. Connect to a LonWorks Free Topology network.

ⓘ *The network termination is polarity insensitive.*

⚠ *Use the network cable specified by Echelon (typically Belden 8471 cable or equivalent).*

5. Refer to the *GTL116-P Startup Guide* prior to moving the power switch to the "ON" position.

.

Advantage IV (A4) GTM116-P WIRING GUIDE

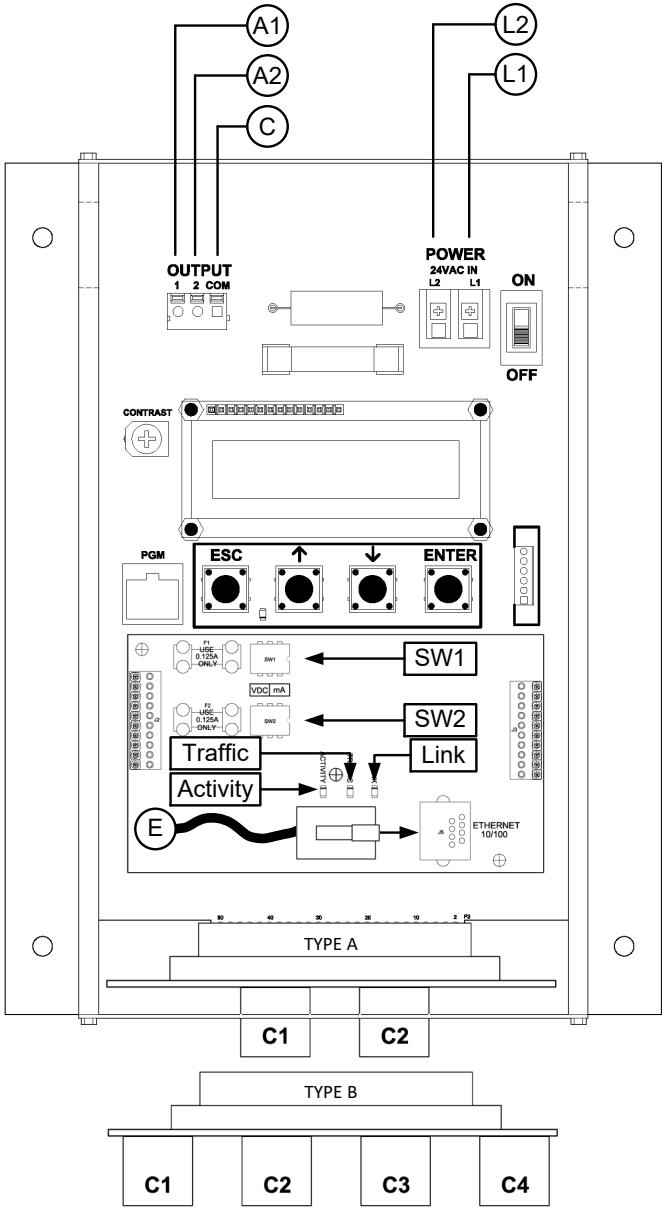

TRANSMITTER CONNECTIONS

Power		Analog Out (isolated)			Ethernet	Type	
L1	L2	A1	A2	C	E	A	B
24 VAC (hot)	24 VAC (neutral)	Airflow +	Temperature or Alarm +	Signal Common	RJ-45 CAT5 or greater	2 probes x 8 sensors/probe	4 probes x 4 sensors/probe

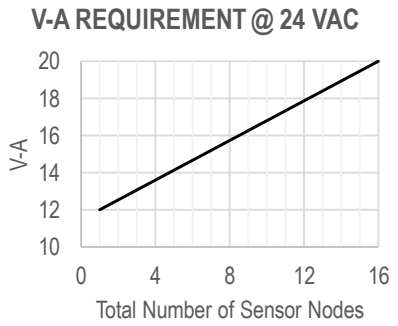

INSTRUCTIONS TO INSTALLER:

1. Mount the transmitter in a location where all probe cables can reach the receptacles of the transmitter. Provide a weatherproof enclosure (by others) and mount away from direct sunlight when outdoor mounting is required.
2. Connect the sensor probes to the transmitter. Although probes are "plug and play" and connections to specific receptacles are not required, it is recommended that probes are connected Probe 1 to receptacle C1, Probe 2 to receptacle C2, etc. Probe numbers are indicated on each cable hang tag.

ⓘ *Cables have an FEP plenum rated jacket that are UV tolerant and suitable for operation over the entire operating temperature range of the device.*

⚠ *Sensor probe plugs are keyed and NOT twist-lock. Align the key and push the plug onto the transmitter receptacle. Twisting may damage the connector pins.*

3. Select a 24 VAC transformer that provides 22.8 to 26.4 VAC during operation. Refer to the chart above to optimize the transformer size or size the transformer for 20 V-A for each measurement location.

⚠ *Multiple transmitters wired to a single transformer must be wired "in-phase" (L1 to L1 and L2 to L2).*

4. If analog output signals are used, continue to step 5, otherwise skip to step 6.
5. Connect each analog output signal required to the host B.A.S. using shielded twisted-pair wire. Properly terminate the shield (typically at the B.A.S.).

⚠ *If twisted pair wire and/or shielded cable is not used, extraneous electrical noise can be picked up between the transmitter and host control panel.*

6. If the Ethernet connection is required continue to step 7, otherwise skip to step 8
7. Connect to an Ethernet network (BACnet Ethernet, BACnet IP, Modbus TCP or TCP/IP), if required, using a standard RJ-45 terminated Ethernet cable, CAT5 or greater.

⚠ *Use of improperly wired RJ-45 connectors may damage the Ethernet output circuit of the transmitter.*

8. Refer to the *GTM116-P Startup Guide* prior to moving the power switch to the "ON" position.

Advantage IV (A4) GTM116e-P WIRING GUIDE

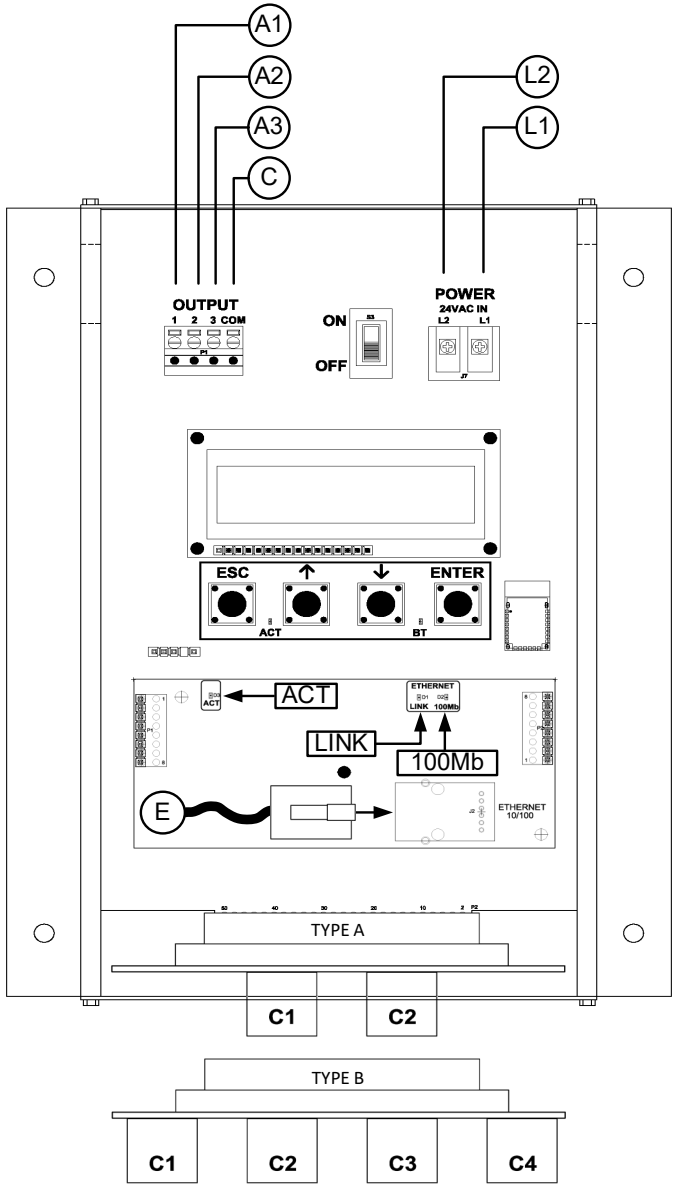

TRANSMITTER CONNECTIONS

Power		Analog Out (isolated)				Ethernet	Type	
L1	L2	A1	A2	A3	C	E	A	B
24 VAC (hot)	24 VAC (neutral)	Airflow +	Temperature or Alarm +	Psychrometric Property +	Signal Common	RJ-45 CAT5 or greater	2 probes x 8 sensors/probe	4 probes x 4 sensors/probe

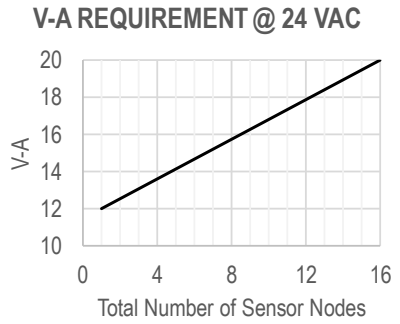

INSTRUCTIONS TO INSTALLER:

1. Mount the transmitter in a location where all probe cables can reach the receptacles of the transmitter. Provide a weatherproof enclosure (by others) and mount away from direct sunlight when outdoor mounting is required.
2. Connect the sensor probes to the transmitter. Although probes are "plug and play" and connections to specific receptacles are not required, it is recommended that probes are connected Probe 1 to receptacle C1, Probe 2 to receptacle C2, etc. Probe numbers are indicated on each cable hang tag.

ⓘ *Cables have an FEP plenum rated jacket that are UV tolerant and suitable for operation over the entire operating temperature range of the device.*

⚠ *Sensor probe plugs are keyed and NOT twist-lock. Align the key and push the plug onto the transmitter receptacle. Twisting may damage the connector pins.*

3. Select a 24 VAC transformer that provides 22.8 to 26.4 VAC during operation. Refer to the chart above to optimize the transformer size or size the transformer for 20 V-A for each measurement location.

⚠ *Multiple transmitters wired to a single transformer must be wired "in-phase" (L1 to L1 and L2 to L2).*

4. If analog output signals are used, continue to step 5, otherwise skip to step 6.
5. Connect each analog output signal required to the host B.A.S. using shielded twisted-pair wire. Properly terminate the shield (typically at the B.A.S.).

ⓘ *AO3 (relative humidity, enthalpy, or dew point) is only available if the /H humidify sensor option is provided.*

⚠ *If twisted pair wire and/or shielded cable is not used, extraneous electrical noise can be picked up between the transmitter and host control panel.*

6. If the Ethernet connection is required continue to step 7, otherwise skip to step 8.
7. Connect to an Ethernet network (BACnet Ethernet, BACnet IP, Modbus TCP or TCP/IP), if required, using a standard RJ-45 terminated Ethernet cable, CAT5 or greater.

⚠ *Use of improperly wired RJ-45 connectors may damage the Ethernet output circuit of the transmitter.*

8. Refer to the *GTM116e-P Startup Guide* prior to moving the power switch to the "ON" position.

Advantage IV (A4) GTU116e-P WIRING GUIDE

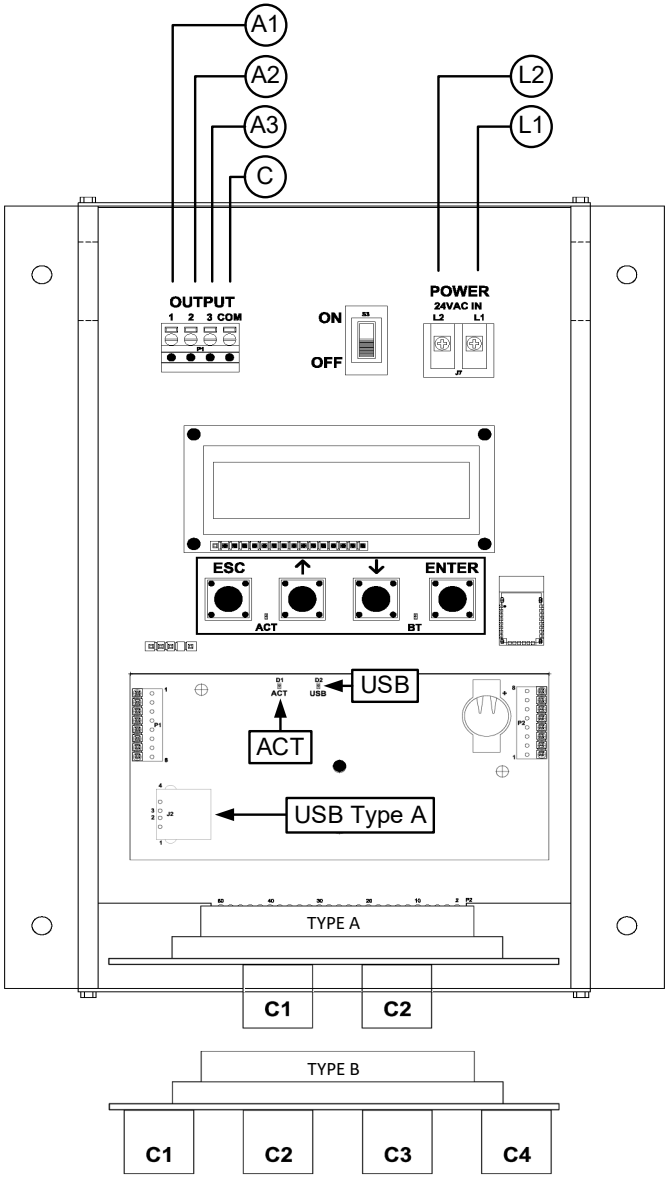

TRANSMITTER CONNECTIONS

Power		Analog Out (isolated)				Type	
L1	L2	A1	A2	A3	C	A	B
24 VAC (hot)	24 VAC (neutral)	Airflow +	Temperature or Alarm +	Psychrometric Property +	Signal Common	2 probes x 8 sensors/probe	4 probes x 4 sensors/probe

V-A REQUIREMENT @ 24 VAC

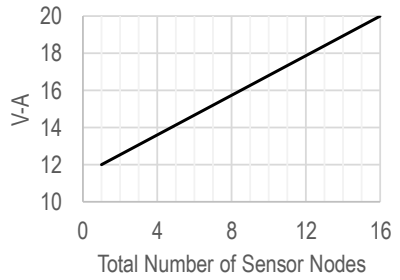

INSTRUCTIONS TO INSTALLER:

1. Mount the transmitter in a location where all probe cables can reach the receptacles of the transmitter. Provide a weatherproof enclosure (by others) and mount away from direct sunlight when outdoor mounting is required.
2. Connect the sensor probes to the transmitter. Although probes are "plug and play" and connections to specific receptacles are not required, it is recommended that probes are connected Probe 1 to receptacle C1, Probe 2 to receptacle C2, etc. Probe numbers are indicated on each cable hang tag.

ⓘ *Cables have an FEP plenum rated jacket that are UV tolerant and suitable for operation over the entire operating temperature range of the device.*

⚠ *Sensor probe plugs are keyed and NOT twist-lock. Align the key and push the plug onto the transmitter receptacle. Twisting may damage the connector pins.*

3. Select a 24 VAC transformer that provides 22.8 to 26.4 VAC during operation. Refer to the chart above to optimize the transformer size or size the transformer for 20 V-A for each measurement location.

⚠ *Multiple transmitters wired to a single transformer must be wired "in-phase" (L1 to L1 and L2 to L2).*

4. If analog output signals are used, continue to step 5, otherwise skip to step 6.
5. Connect each analog output signal required to the host B.A.S. using shielded twisted-pair wire. Properly terminate the shield (typically at the B.A.S.).

ⓘ *AO3 (relative humidity, enthalpy, or dew point) is only available if the /H humidify sensor option is provided.*

⚠ *If twisted pair wire and/or shielded cable is not used, extraneous electrical noise can be picked up between the transmitter and host control panel.*

6. If USB memory device connection is required continue to step 7 otherwise skip to step 8.
7. Install and properly seat a USB memory device ("thumb drive") into the USB Type A connector on the option card.

It is a good practice to verify the transmitter power switch is in in the "OFF" position before inserting or removing the USB memory device..

⚠ *Always set the USB WRITE parameter to "OFF" before removing the USB memory device to avoid data loss/and or damage..*

8. Refer to the *GTU116e-P Startup Guide* prior to moving the power switch to the "ON" position.

Advantage IV (A4) GTW116-P WIRING GUIDE

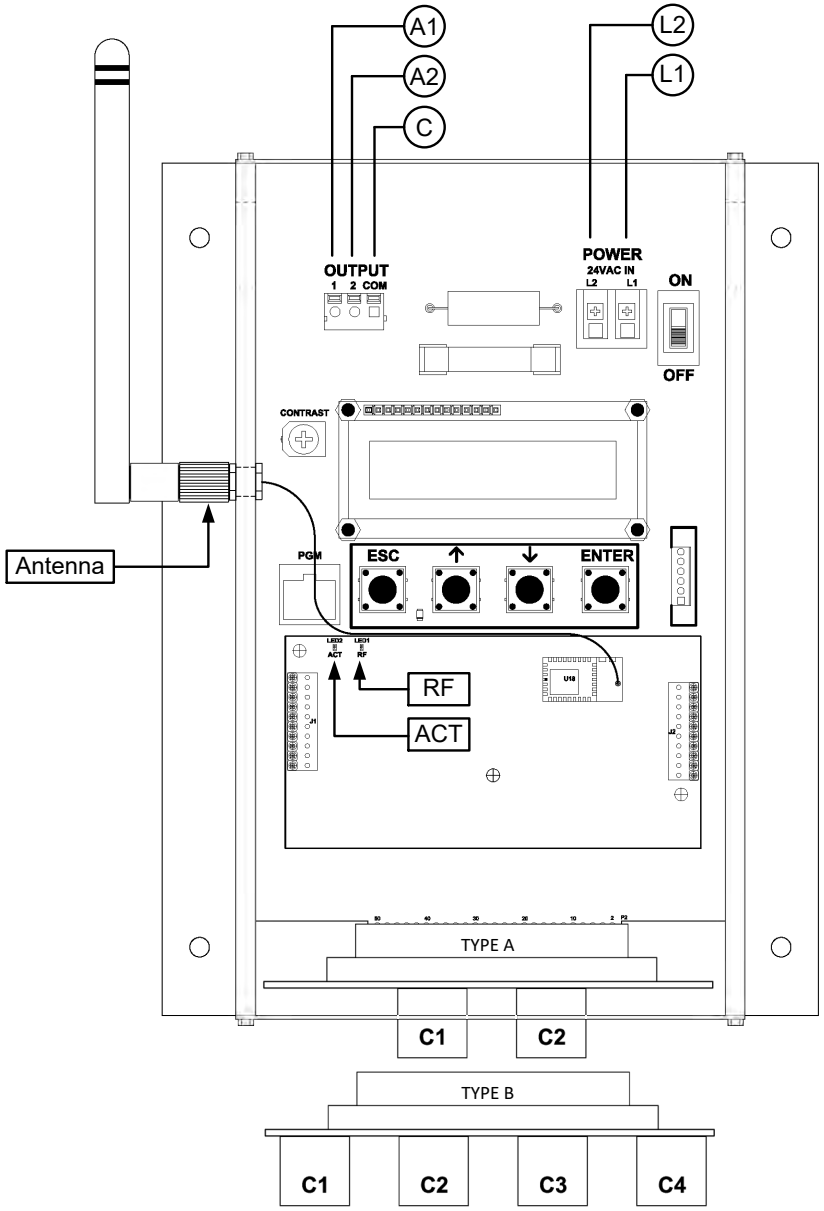

TRANSMITTER CONNECTIONS

Power		Analog Out (isolated)			Type	
L1	L2	A1	A2	C	A	B
24 VAC (hot)	24 VAC (neutral)	Airflow +	Temperature or Alarm +	Signal Common	2 probes x 8 sensors/probe	4 probes x 4 sensors/probe

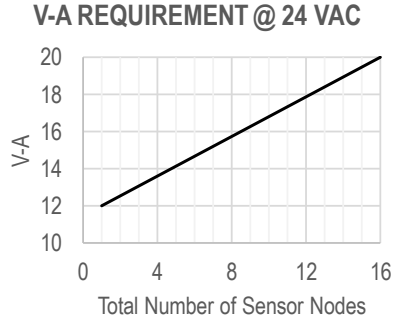

INSTRUCTIONS TO INSTALLER:

1. Mount the transmitter in a location where all probe cables can reach the receptacles of the transmitter. Provide a weatherproof enclosure (by others) and mount away from direct sunlight when outdoor mounting is required.

ⓘ *Although the wireless radio does not require a clear line of sight between the transmitter and receiving device, a large mass of metal or another RF interference source could degrade signal strength and adversely affect the RF transmission. Note any obstructions between the transmitter and receiving device and avoid placing the transmitter and receiving device between obstructions, whenever possible.*

2. Connect the sensor probes to the transmitter. Although probes are "plug and play" and connections to specific receptacles are not required, it is recommended that probes are connected Probe 1 to receptacle C1, Probe 2 to receptacle C2, etc. Probe numbers are indicated on each cable hang tag.

ⓘ *Cables have an FEP plenum rated jacket that are UV tolerant and suitable for operation over the entire operating temperature range of the device.*

⚠ *Sensor probe plugs are keyed and NOT twist-lock. Align the key and push the plug onto the transmitter receptacle. Twisting may damage the connector pins.*

3. Select a 24 VAC transformer that provides 22.8 to 26.4 VAC during operation. Refer to the chart above to optimize the transformer size or size the transformer for 20 V-A for each measurement location.

⚠ *Multiple transmitters wired to a single transformer must be wired "in-phase" (L1 to L1 and L2 to L2).*

4. If analog output signals are used, continue to step 5, otherwise skip to step 6.
5. Connect each analog output signal required to the host B.A.S. using shielded twisted-pair wire. Properly terminate the shield (typically at the B.A.S.).

⚠ *If twisted pair wire and/or shielded cable is not used, extraneous electrical noise can be picked up between the transmitter and host control panel.*

6. *Connect the antenna provided to the transmitter by screwing it into the SMA connector located on the top left of the transmitter enclosure. Make sure the antenna is pointing upward.*
7. Refer to the *GTW116-P Startup Guide* prior to moving the power switch to the "ON" position.

Advantage IV (A4) HTA104-P WIRING GUIDE

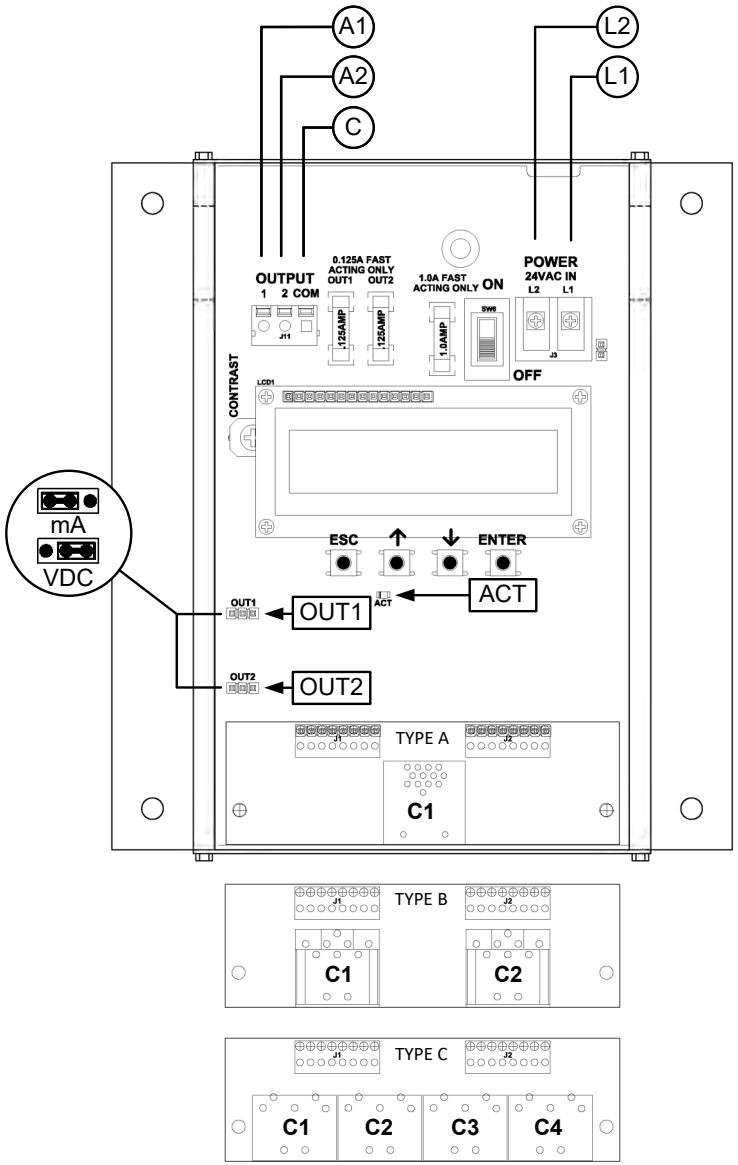

TRANSMITTER CONNECTIONS

Power		Analog Out (isolated)			Type		
L1	L2	A1	A2	C	A	B	C
24 VAC (hot)	24 VAC (neutral)	Airflow +	Temperature or Alarm +	Signal Common	1 probe x 4 sensors/probe	2 probes x 2 sensors/probe	4 probes x 1 sensor/probe

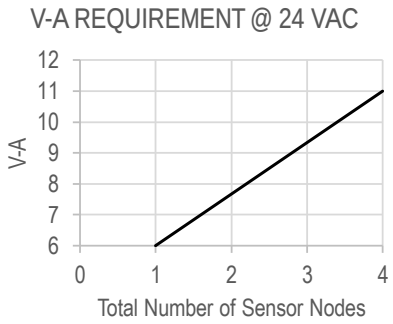

INSTRUCTIONS TO INSTALLER:

1. Mount the transmitter in a location where all probe cables can reach the receptacles of the transmitter. Provide a weatherproof enclosure (by others) and mount away from direct sunlight when outdoor mounting is required.
2. Connect the sensor probes to the transmitter. Although probes are "plug and play" and connections to specific receptacles are not required, it is recommended that probes are connected Probe 1 to receptacle C1, Probe 2 to receptacle C2, etc. Probe numbers are indicated on each cable hang tag.

ⓘ *Cables have an FEP plenum rated jacket that are UV tolerant and suitable for operation over the entire operating temperature range of the device.*

⚠ *Sensor probe plugs are keyed and NOT twist-lock. Align the key and push the plug onto the transmitter receptacle. Twisting may damage the connector pins.*

3. Select a 24 VAC transformer that provides 22.8 to 26.4 VAC during operation. Refer to the chart above to optimize the transformer size or size the transformer for 11 V-A for each measurement location.

⚠ *Multiple transmitters wired to a single transformer must be wired "in-phase" (L1 to L1 and L2 to L2).*

4. If analog output signals are used, continue to step 5, otherwise skip to step 6.
5. Connect each analog output signal required to the host B.A.S. using shielded twisted-pair wire. Properly terminate the shield (typically at the B.A.S.).

⚠ *If twisted pair wire and/or shielded cable is not used, extraneous electrical noise can be picked up between the transmitter and host control panel.*

6. Refer to the *HTA104-P Startup Guide* prior to moving the power switch to the "ON" position.

Advantage IV (A4) HTN104-P WIRING GUIDE

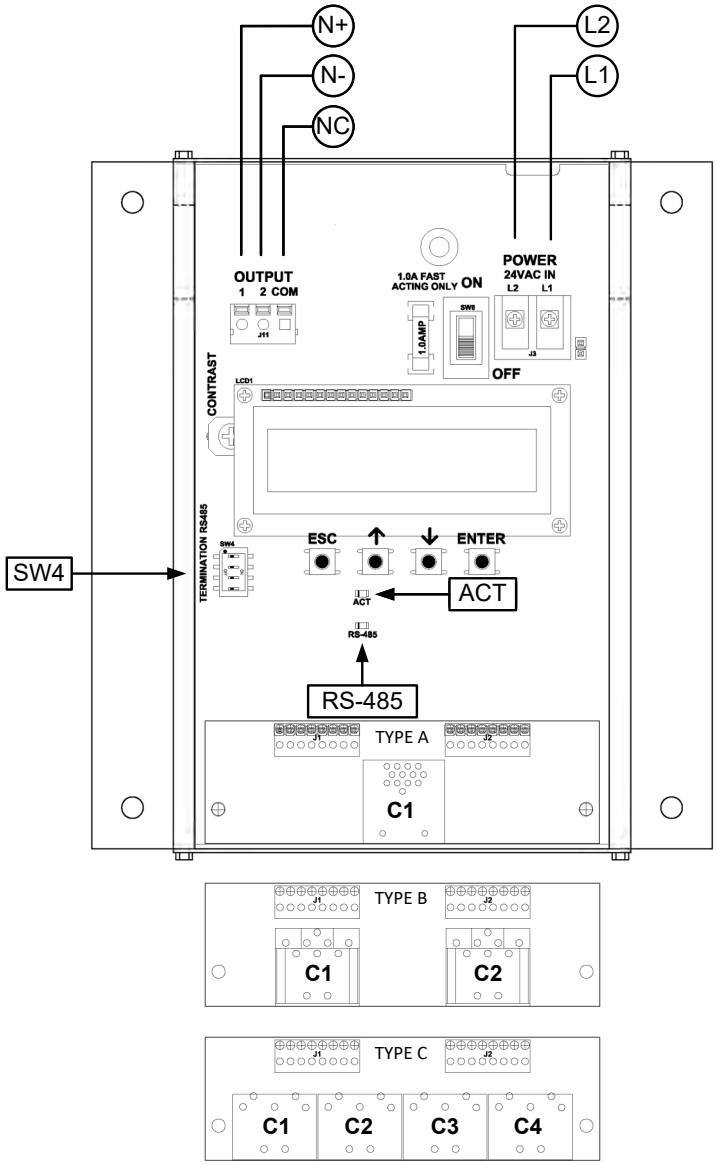

TRANSMITTER CONNECTIONS

Power		RS-485 (isolated)			Type		
L1	L2	N+	N-	NC	A	B	C
24 VAC (hot)	24 VAC (neutral)	Network +	Network -	Network Common	1 probe x 4 sensors/probe	2 probes x 2 sensors/probe	4 probes x 1 sensor/probe

V-A REQUIREMENT @ 24 VAC

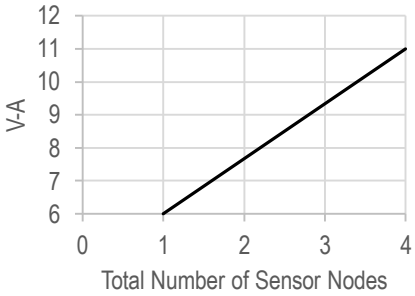

INSTRUCTIONS TO INSTALLER:

1. Mount the transmitter in a location where all probe cables can reach the receptacles of the transmitter. Provide a weatherproof enclosure (by others) and mount away from direct sunlight when outdoor mounting is required.
2. Connect the sensor probes to the transmitter. Although probes are "plug and play" and connections to specific receptacles are not required, it is recommended that probes are connected Probe 1 to receptacle C1, Probe 2 to receptacle C2, etc. Probe numbers are indicated on each cable hang tag.

ⓘ *Cables have an FEP plenum rated jacket that are UV tolerant and suitable for operation over the entire operating temperature range of the device.*

⚠ *Sensor probe plugs are keyed and NOT twist-lock. Align the key and push the plug onto the transmitter receptacle. Twisting may damage the connector pins.*

3. Select a 24 VAC transformer that provides 22.8 to 26.4 VAC during operation. Refer to the chart above to optimize the transformer size or size the transformer for 11 V-A for each measurement location.

⚠ *Multiple transmitters wired to a single transformer must be wired "in-phase" (L1 to L1 and L2 to L2).*

4. If the RS-485 connection is required continue to step 5, otherwise skip to step 7.
5. Connect to an RS-485 network (BACnet MS/TP or Modbus RTU), if required, using a 3-conductor network cable meeting the corresponding BACnet or Modbus standards. Ensure that all three connections, N+, N- and NC are connected.

⚠ *If a 2-conductor network cable or other non-conforming cable is used, network speed, length and reliability may be compromised or network failure may occur.*

6. If the transmitter is the first device on the network run, configure SW4 on the output card for "failsafe-bias". If the transmitter is the last device on the network run, configure SW4 for "end-of-line". Otherwise, configure SW4 for no termination (default).

SW4 - RS-485 TERMINATION DIP SWITCH POSITIONS

1	2	3	4	TERMINATION
OFF	OFF	OFF	OFF	No termination (default)
OFF	ON	ON	OFF	End of Line
ON	OFF	OFF	ON	Fail-Safe Bias

7. Refer to the *HTN104-P Startup Guide* prior to moving the power switch to the "ON" position.

Advantage IV (A4) HTA104-T WIRING GUIDE

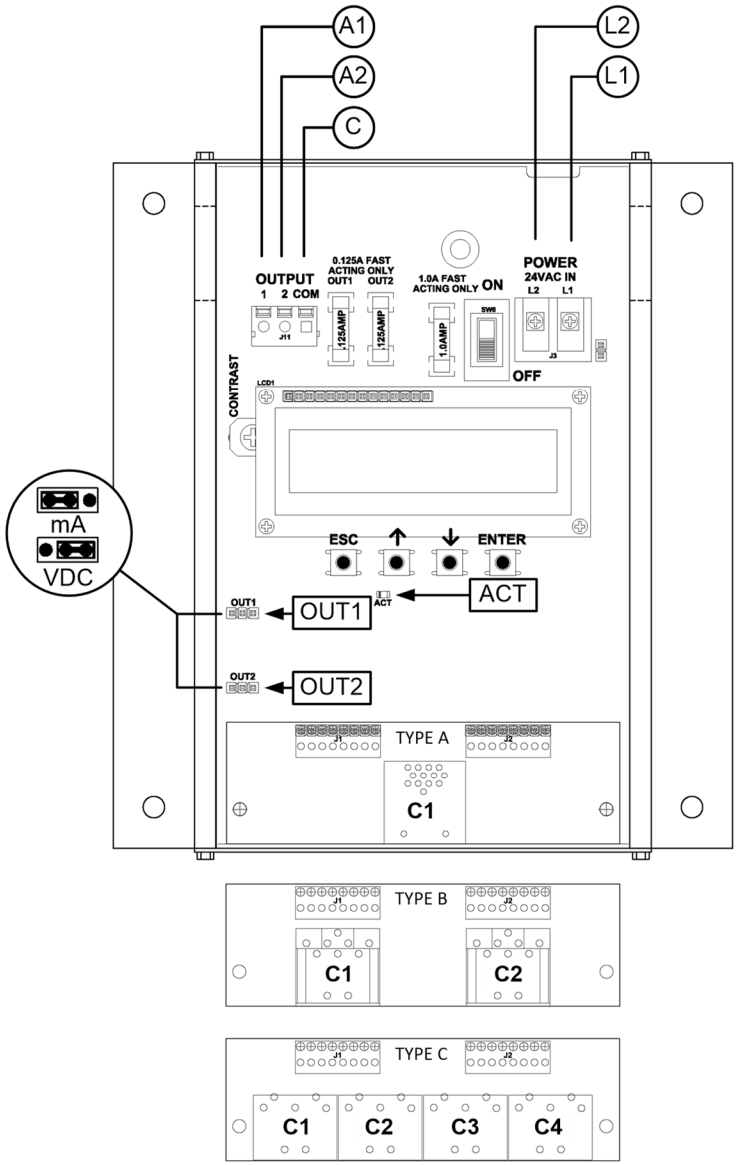

TRANSMITTER CONNECTIONS

Power		Analog Out (isolated)			Connector Type B	
L1	L2	A1	A2	GND	C1	C2
24 VAC (hot)	24 VAC (neutral)	Airflow +	Temperature or Alarm +	Signal Common	1 probe x 2 sensors/probe	Not Used

INSTRUCTIONS TO INSTALLER:

1. Mount the transmitter in a location where the probe cable can reach the receptacle of the transmitter. Provide a weatherproof enclosure (by others) and mount away from direct sunlight when outdoor mounting is required.
2. Connect the sensor probe cable to connector C1 of the transmitter. Connector C2 is not used in this configuration.

ⓘ *Cables have an FEP plenum rated jacket that are UV tolerant and suitable for operation over the entire operating temperature range of the device.*

⚠ *Sensor probe plugs are keyed and NOT twist-lock. Align the key and push the plug onto the transmitter receptacle. Twisting may damage the connector pins.*

3. Select a 24 VAC transformer that provides 22.8 to 26.4 VAC during operation. Size the transformer for 8 V-A for each measurement location.

⚠ *Multiple transmitters wired to a single transformer must be wired "in-phase" (L1 to L1 and L2 to L2).*

4. If analog output signals are used, continue to step 5, otherwise skip to step 6.
5. Connect each analog output signal required to the host B.A.S. using shielded twisted-pair wire. Properly terminate the shield (typically at the B.A.S.).

⚠ *If twisted pair wire and/or shielded cable is not used, extraneous electrical noise can be picked up between the transmitter and host control panel.*

6. Refer to the *HTA104-T Startup Guide* prior to moving the power switch to the "ON" position.

Advantage IV (A4) HTN104-T WIRING GUIDE

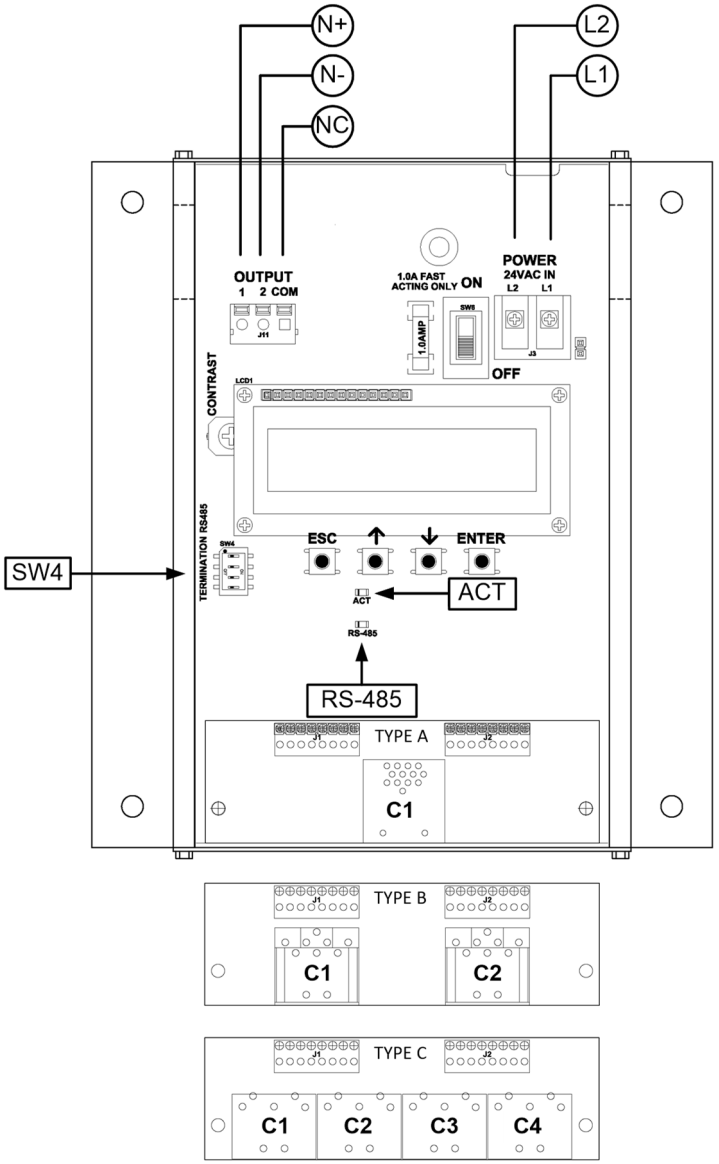

TRANSMITTER CONNECTIONS

Power		RS-485 (isolated)			Connector Type B	
L1	L2	N+	N-	NC	C1	C2
24 VAC (hot)	24 VAC (neutral)	Network +	Network -	Network Common	1 probe x 2 sensors/probe	Not Used

INSTRUCTIONS TO INSTALLER:

1. Mount the transmitter in a location where the probe cable can reach the receptacles of the transmitter. Provide a weatherproof enclosure (by others) and mount away from direct sunlight when outdoor mounting is required.
2. Connect the sensor probe cable to connector C1 of the transmitter. Connector C2 is not used in this configuration.

ⓘ *Cables have an FEP plenum rated jacket that are UV tolerant and suitable for operation over the entire operating temperature range of the device.*

⚠ *Sensor probe plugs are keyed and NOT twist-lock. Align the key and push the plug onto the transmitter receptacle. Twisting may damage the connector pins.*

3. Select a 24 VAC transformer that provides 22.8 to 26.4 VAC during operation. Size the transformer for 8 V-A for each measurement location.

⚠ *Multiple transmitters wired to a single transformer must be wired "in-phase" (L1 to L1 and L2 to L2).*

4. If the RS-485 connection is required continue to step 5, otherwise skip to step 7.
5. Connect to an RS-485 network (BACnet MS/TP or Modbus RTU), if required, using a 3-conductor network cable meeting the corresponding BACnet or Modbus standards. Ensure that all three connections, N+, N- and NC are connected.

⚠ *If a 2-conductor network cable or other non-conforming cable is used, network speed, length and reliability may be compromised or network failure may occur.*

6. If the transmitter is the first device on the network run, configure SW4 for "failsafe-bias". If the transmitter is the last device on the network run, configure SW4 for "end-of-line". Otherwise, configure SW4 for no termination (default).

SW4 - RS-485 TERMINATION DIP SWITCH POSITIONS

1	2	3	4	TERMINATION
OFF	OFF	OFF	OFF	No termination (default)
OFF	ON	ON	OFF	End of Line
ON	OFF	OFF	ON	Fail-Safe Bias

7. Refer to the *HTN104-T Startup Guide* prior to moving the power switch to the "ON" position.

EB-FlowII EF-A2000-T WIRING GUIDE

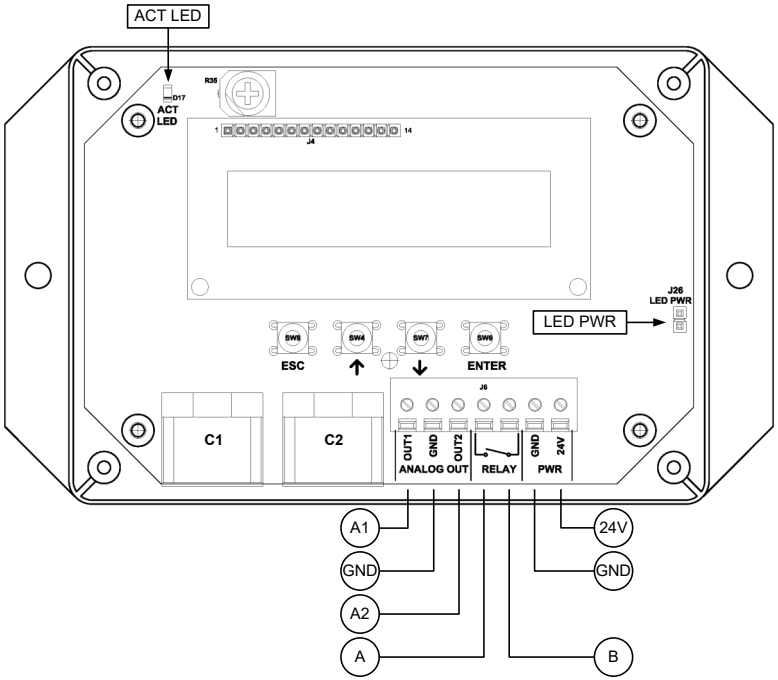

TRANSMITTER CONNECTIONS

Power		Analog Out (non-isolated)			Contact Closure		Connector	
24V	GND	A1	A2	GND	A	B	C1	C2
24 VAC (hot)	24 VAC (neutral)	Airflow +	Temperature or Alarm +	Signal Common	OUT	IN	1 probe x 2 sensors/probe	Not Used

INSTRUCTIONS TO INSTALLER:

1. Mount the transmitter in a location where the probe cable can reach the receptacles of the transmitter. Provide a weatherproof enclosure (by others) and mount away from direct sunlight when outdoor mounting is required.
2. Connect the sensor probe to connector C1 of the transmitter. Connector C2 is not used in this configuration.

ⓘ *Cables have an FEP plenum rated jacket that are UV tolerant and suitable for operation over the entire operating temperature range of the device.*

⚠ *Sensor probe plugs are keyed and NOT twist-lock. Align the key and push the plug onto the transmitter receptacle. Twisting may damage the connector pins.*

3. Select a 24 VAC transformer that provides 22.8 to 26.4 VAC during operation. Size the transformer for 8.5 V-A for each measurement location.

⚠ *The labeling "24V" is equivalent to "L1" and "GND" is equivalent to "L2" in many AC wiring diagrams. Do not connect "GND" to earth ground.*

⚠ *Most B.A.S. systems require devices with a "floating" signal common. Do not connect the secondary output of the power transformer to earth ground. Failure to follow this requirement will result in ground loops and may cause damage to the transmitter or host B.A.S.*

⚠ *Multiple transmitters wired to a single transformer must be wired "in-phase" (24V to 24V and GND to GND).*

4. *EB-FLowII* transmitters do not have a power switch. "Live" wiring to the power terminals is not recommended. Do not energize the transformer until power and all signal connections have been made to the transmitter.

⚠ *"Live" wiring may damage the transmitter and void warranty. Do not energize the transformer until power and all signal connections have been made to the transmitter.*

5. If analog output signals are used, continue to step 6, otherwise skip to step 7.
6. Connect each analog output signal required to the host B.A.S. using shielded twisted-pair wire. Properly terminate the shield (typically at the B.A.S.).

⚠ *If twisted pair wire and/or shielded cable is not used, extraneous electrical noise can be picked up between the transmitter and host control panel.*

7. If the contact closure relay is used continue to step 8, otherwise skip to step 11.
8. If the contact closure relay is used to energize an external alarm device, such as a relay, continue to step 9. If the contact closure relay is used to drive an LED, skip to step 10.
9. Connect the "hot" wire of an external alarm device in series with relay terminals A and B. The contact closure relay is normally open (N.O.) but can be setup for normally closed (N.C.) operation. Refer to the *Operations and Maintenance* Manual for more information. Skip to step 11.

⚠ *The alarm device must not exceed 3 amps @ 24 VAC or 30 VDC.*

10. Connect the positive (anode) side of the LED to relay output A and the negative (cathode) side to ground (PCB GND terminal preferred). Place the shunt jumper across the LED PWR posts (J26).
11. Refer to the *EF-A2000-T Startup Guide* prior to energizing power to the transformer.

EB-FlowII EF-N2000-T WIRING GUIDE

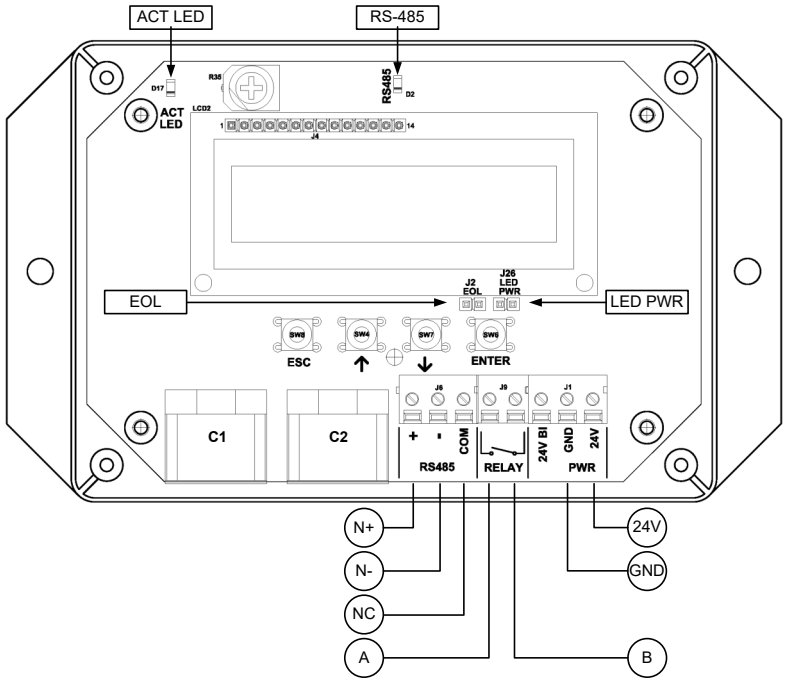

TRANSMITTER CONNECTIONS

Power		RS-485 (non-isolated)			Contact Closure		Connector	
24V	GND	N+	N-	NC	A	B	C1	C2
24 VAC (hot)	24 VAC (neutral)	Network +	Network -	Network Common	OUT	IN	1 probe x 2 sensors/probe	Not Used

INSTRUCTIONS TO INSTALLER:

1. Mount the transmitter in a location where the probe cable can reach the receptacles of the transmitter. Provide a weatherproof enclosure (by others) and mount away from direct sunlight when outdoor mounting is required.
2. Connect the sensor probe to connector C1 of the transmitter. Connector C2 is not used in this configuration.

ⓘ *Cables have an FEP plenum rated jacket that are UV tolerant and suitable for operation over the entire operating temperature range of the device.*

⚠ *Sensor probe plugs are keyed and NOT twist-lock. Align the key and push the plug onto the transmitter receptacle. Twisting may damage the connector pins.*

3. Select a 24 VAC transformer that provides 22.8 to 26.4 VAC during operation. Size the transformer for 8.5 V-A for each measurement location.

⚠ *The labeling "24V" is equivalent to "L1" and "GND" is equivalent to "L2" in many AC wiring diagrams. Do not connect "GND" to earth ground.*

⚠ *Most B.A.S. systems require devices with an isolated RS-485 network. Do not connect the secondary output of the power transformer to earth ground.*

⚠ *Multiple transmitters wired to a single transformer must be wired "in-phase" (24V to 24V and GND to GND).*

4. *EB-FLowII* transmitters do not have a power switch. "Live" wiring to the power terminals is not recommended. Do not energize the transformer until power and all signal connections have been made to the transmitter.

⚠ *"Live" wiring may damage the transmitter and void warranty. Do not energize the transformer until power and all signal connections have been made to the transmitter.*

5. If the RS-485 connection is required continue to step 6, otherwise skip to step 8.
6. Connect to an RS-485 network (BACnet MS/TP or Modbus RTU), if required, using a 3-conductor network cable meeting the corresponding BACnet or Modbus standards. Ensure that all three connections, N+, N- and NC are connected.

⚠ *If a 2-conductor network cable or other non-conforming cable is used, network speed, length and reliability may be compromised or network failure may occur.*

7. If the transmitter is the first or last device on the network run, place the shunt jumper across the EOL posts (J2).
8. If the contact closure relay is used continue to step 9, otherwise skip to step 12.
9. If the contact closure relay is used to energize an external alarm device, such as a relay, continue to step 10. If the contact closure relay is used to drive an LED, skip to step 11.
10. Connect the "hot" wire of an external alarm device in series with relay terminals A and B. The contact closure relay is normally open (N.O.) but can be setup for normally closed (N.C.) operation. Refer to the *Operations and Maintenance* Manual for more information. Skip to step 12.

⚠ *The alarm device must not exceed 3 amps @ 24 VAC or 30 VDC.*

11. Connect the positive (anode) side of the LED to relay output A and the negative (cathode) side to ground (PCB GND terminal preferred). Place the shunt jumper across the LED PWR posts (J26).
12. Refer to the *EF-N2000-T Startup Guide* prior to energizing power to the transformer.

EB-FlowII EF-A2000-U WIRING GUIDE

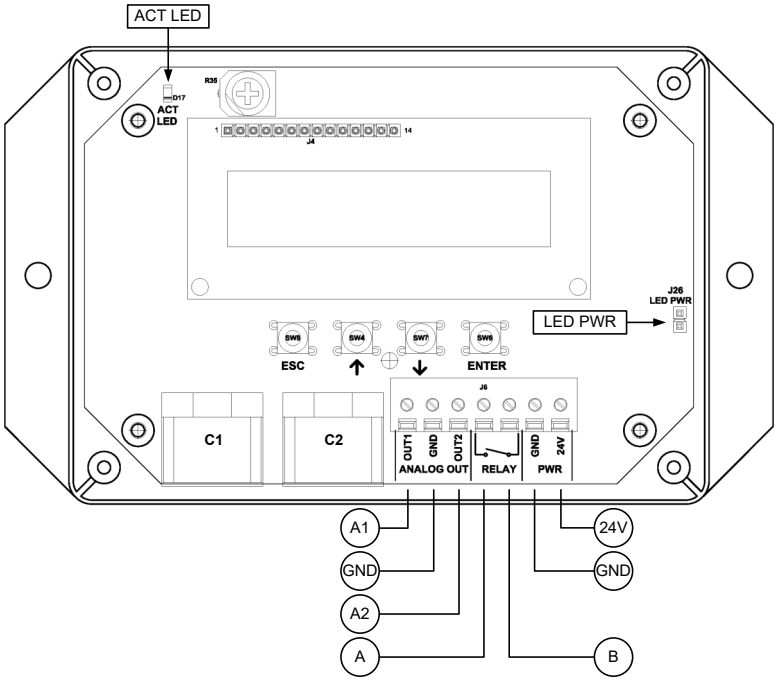

TRANSMITTER CONNECTIONS

Single Location Configuration (Default)

Power		Analog Out (non-isolated)			Contact Closure		Connector	
24V	GND	A1	A2	GND	A	B	C1	C2
24 VAC (hot)	24 VAC (neutral)	Airflow +	Temperature or Alarm +	Signal Common	OUT	IN	1 probe x 1 sensor/probe	1 probe x 1 sensor/probe

Dual Location Configuration

Power		Analog Out (non-isolated)			Contact Closure		Connector	
							AF1	AF2
24V	GND	A1	A2	GND	A	B	C1	C2
24 VAC (hot)	24 VAC (neutral)	Airflow1, Airflow1-2, or Airflow2-1 +	Airflow2, Airflow1-2, or Airflow2-1 +	Signal Common	OUT	IN	1 probe x 1 sensor/probe	1 probe x 1 sensor/probe

INSTRUCTIONS TO INSTALLER:

1. Mount the transmitter in a location where the probe cable can reach the receptacles of the transmitter. Provide a weatherproof enclosure (by others) and mount away from direct sunlight when outdoor mounting is required.
2. Connect the sensor probes to the transmitter. Although probes are "plug and play" and connections to specific receptacles are not required, it is recommended that probes are connected Probe 1 to receptacle C1 and Probe 2, if provided, to receptacle C2. Probe numbers are indicated on each cable hang tag.

ⓘ *If the transmitter will be configured for two locations, connect the probe for Airflow1 into C1 and the probe for Airflow2 into C2.*

ⓘ *Cables have an FEP plenum rated jacket that are UV tolerant and suitable for operation over the entire operating temperature range of the device.*

⚠ *Sensor probe plugs are keyed and NOT twist-lock. Align the key and push the plug onto the transmitter receptacle. Twisting may damage the connector pins.*

3. Select a 24 VAC transformer that provides 22.8 to 26.4 VAC during operation. Size the transformer for 8.5 V-A for each measurement location.

⚠ *The labeling "24V" is equivalent to "L1" and "GND" is equivalent to "L2" in many AC wiring diagrams. Do not connect "GND" to earth ground.*

⚠ *Most B.A.S. systems require devices with a "floating" signal common. Do not connect the secondary output of the power transformer to earth ground. Failure to follow this requirement will result in ground loops and may cause damage to the transmitter or host B.A.S.*

⚠ *Multiple transmitters wired to a single transformer must be wired "in-phase" (24V to 24V and GND to GND).*

4. *EB-FLowII* transmitters do not have a power switch. "Live" wiring to the power terminals is not recommended. Do not energize the transformer until power and all signal connections have been made to the transmitter.

⚠ *"Live" wiring may damage the transmitter and void warranty. Do not energize the transformer until power and all signal connections have been made to the transmitter.*

5. If analog output signals are used, continue to step 6, otherwise skip to step 7.
6. Connect each analog output signal required to the host B.A.S. using shielded twisted-pair wire. Properly terminate the shield (typically at the B.A.S.).

⚠ *If twisted pair wire and/or shielded cable is not used, extraneous electrical noise can be picked up between the transmitter and host control panel.*

7. If the contact closure relay is used continue to step 8, otherwise skip to step 11.
8. If the contact closure relay is used to energize an external alarm device, such as a relay, continue to step 9. If the contact closure relay is used to drive an LED, skip to step 10.
9. Connect the "hot" wire of an external alarm device in series with relay terminals A and B. The contact closure relay is normally open (N.O.) but can be setup for normally closed (N.C.) operation. Refer to the *Operations and Maintenance* Manual for more information. Skip to step 11.

⚠ *The alarm device must not exceed 3 amps @ 24 VAC or 30 VDC.*

10. Connect the positive (anode) side of the LED to relay output A and the negative (cathode) side to ground (PCB GND terminal preferred). Place the shunt jumper across the LED PWR posts (J26).
11. Refer to the *EF-A2000-U Startup Guide* prior to energizing power to the transformer.

EB-FlowII EF-N2000-U WIRING GUIDE

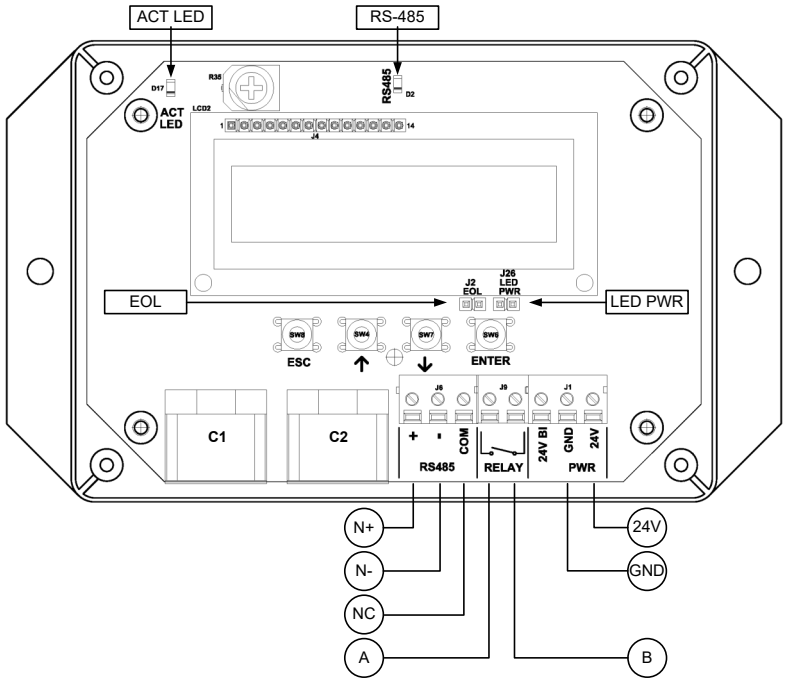

TRANSMITTER CONNECTIONS

Single Location Configuration (Default)

Power		RS-485 (non-isolated)			Contact Closure		Connector	
24V	GND	N+	N-	NC	A	B	C1	C2
24 VAC (hot)	24 VAC (neutral)	Network +	Network -	Network Common	OUT	IN	1 probe x 1 sensor/probe	1 probe x 1 sensor/probe

Dual Location Configuration

Power		RS-485 (non-isolated)			Contact Closure		Connector	
							AF1	AF2
24V	GND	N+	N-	NC	A	B	C1	C2
24 VAC (hot)	24 VAC (neutral)	Network +	Network -	Network Common	OUT	IN	1 probe x 1 sensor/probe	1 probe x 1 sensor/probe

INSTRUCTIONS TO INSTALLER:

1. Mount the transmitter in a location where the probe cable can reach the receptacles of the transmitter. Provide a weatherproof enclosure (by others) and mount away from direct sunlight when outdoor mounting is required.
2. Connect the sensor probes to the transmitter. Although probes are "plug and play" and connections to specific receptacles are not required, it is recommended that probes are connected Probe 1 to receptacle C1 and Probe 2, if provided, to receptacle C2. Probe numbers are indicated on each cable hang tag.

ⓘ *If the transmitter will be configured for two locations, connect the probe for Airflow1 into C1 and the probe for Airflow2 into C2.*

ⓘ *Cables have an FEP plenum rated jacket that are UV tolerant and suitable for operation over the entire operating temperature range of the device.*

⚠ *Sensor probe plugs are keyed and NOT twist-lock. Align the key and push the plug onto the transmitter receptacle. Twisting may damage the connector pins.*

3. Select a 24 VAC transformer that provides 22.8 to 26.4 VAC during operation. Size the transformer for 8.5 V-A for each measurement location.

⚠ *The labeling "24V" is equivalent to "L1" and "GND" is equivalent to "L2" in many AC wiring diagrams. Do not connect "GND" to earth ground.*

⚠ *Most B.A.S. systems require devices with an isolated RS-485 network. Do not connect the secondary output of the power transformer to earth ground.*

⚠ *Multiple transmitters wired to a single transformer must be wired "in-phase" (24V to 24V and GND to GND).*

4. *EB-FLowII* transmitters do not have a power switch. "Live" wiring to the power terminals is not recommended. Do not energize the transformer until power and all signal connections have been made to the transmitter.

⚠ *"Live" wiring may damage the transmitter and void warranty. Do not energize the transformer until power and all signal connections have been made to the transmitter.*

5. If the RS-485 connection is required continue to step 6, otherwise skip to step 8.
6. Connect to an RS-485 network (BACnet MS/TP or Modbus RTU), if required, using a 3-conductor network cable meeting the corresponding BACnet or Modbus standards. Ensure that all three connections, N+, N- and NC are connected.

⚠ *If a 2-conductor network cable or other non-conforming cable is used, network speed, length and reliability may be compromised or network failure may occur.*

7. If the transmitter is the first or last device on the network run, place the shunt jumper across the EOL posts (J2).
8. If the contact closure relay is used continue to step 9, otherwise skip to step 12.
9. If the contact closure relay is used to energize an external alarm device, such as a relay, continue to step 10. If the contact closure relay is used to drive an LED, skip to step 11.
10. Connect the "hot" wire of an external alarm device in series with relay terminals A and B. The contact closure relay is normally open (N.O.) but can be setup for normally closed (N.C.) operation. Refer to the *Operations and Maintenance* Manual for more information. Skip to step 12.

⚠ *The alarm device must not exceed 3 amps @ 24 VAC or 30 VDC.*

11. Connect the positive (anode) side of the LED to relay output A and the negative (cathode) side to ground (PCB GND terminal preferred). Place the shunt jumper across the LED PWR posts (J26).
12. Refer to the *EF-N2000-U Startup Guide* prior to energizing power to the transformer.

Advantage IV (A4) GTA108e-F WIRING GUIDE

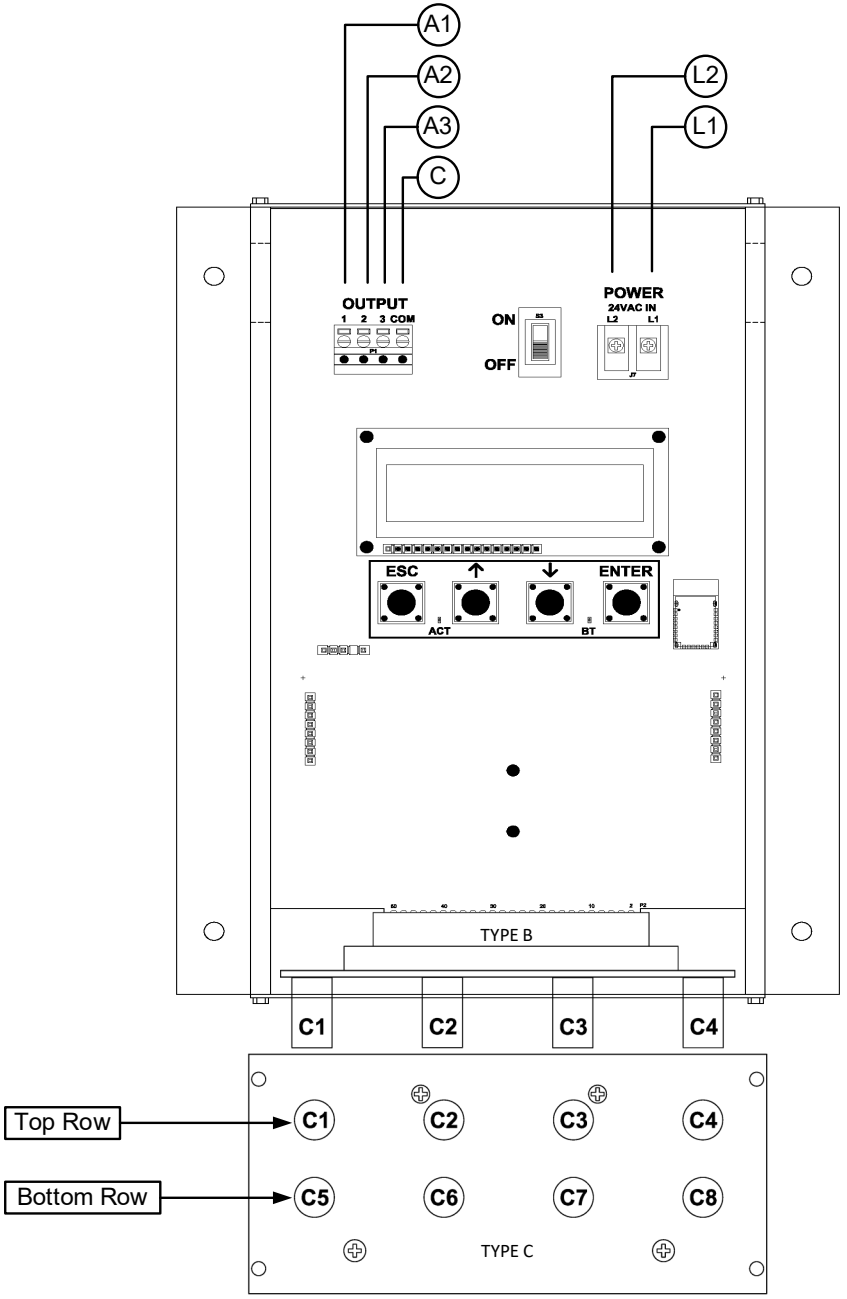

TRANSMITTER CONNECTIONS

Power		Analog Out (isolated)				Type	
L1	L2	A1	A2	A3	C	B	C
24 VAC (hot)	24 VAC (neutral)	Airflow +	Temperature or Alarm +	N/A	Signal Common	4 probes x 1 sensor/probe	8 probes x 1 sensor/probe

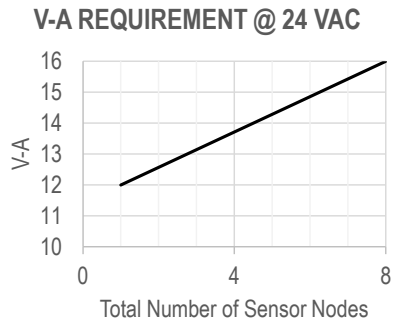

INSTRUCTIONS TO INSTALLER:

1. Mount the transmitter in a location where all probe cables can reach the receptacles of the transmitter. Provide a weatherproof enclosure (by others) and mount away from direct sunlight when outdoor mounting is required.
2. Connect the sensor probes to the transmitter. Although probes are "plug and play" and connections to specific receptacles are not required, it is recommended that probes are connected Probe 1 to receptacle C1, Probe 2 to receptacle C2, etc. Probe numbers are indicated on each cable hang tag.

⚠ *Fan array models (-F/An) must follow this convention if two probes are located in each fan inlet and the individual fan airflow rates are required and/or the fan alarm is enabled (i.e. put probes for fan 1 in C1 and C2, fan 2 in C3 and C4, etc.).*

ⓘ *Cables have an FEP plenum rated jacket that are UV tolerant and suitable for operation over the entire operating temperature range of the device.*

⚠ *Sensor probe plugs are keyed and NOT twist-lock. Align the key and push the plug onto the transmitter receptacle. Twisting may damage the connector pins.*

3. Select a 24 VAC transformer that provides 22.8 to 26.4 VAC during operation. Refer to the chart above to optimize the transformer size or size the transformer for 16 V-A for each measurement location.

⚠ *Multiple transmitters wired to a single transformer must be wired "in-phase" (L1 to L1 and L2 to L2).*

4. If analog output signals are used, continue to step 5, otherwise skip to step 6.
5. Connect each analog output signal required to the host B.A.S. using shielded twisted-pair wire. Properly terminate the shield (typically at the B.A.S.).

⚠ *If twisted pair wire and/or shielded cable is not used, extraneous electrical noise can be picked up between the transmitter and host control panel.*

6. Refer to the *GTA108e-F Startup Guide* prior to moving the power switch to the "ON" position.

Advantage IV (A4) GTB108-F WIRING GUIDE

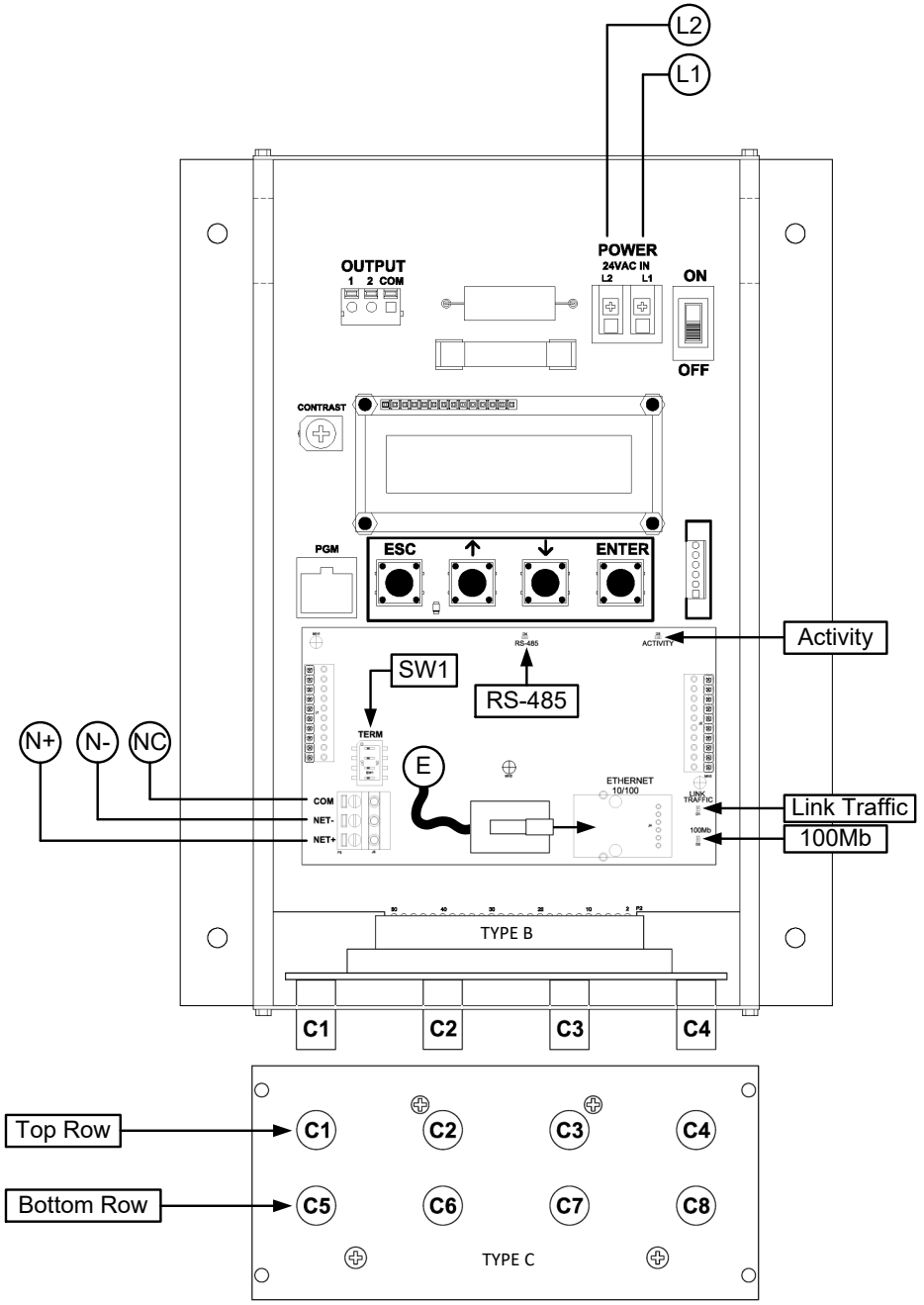

TRANSMITTER CONNECTIONS

Power		RS-485 (isolated)			Ethernet	Type	
L1	L2	N+	N-	NC	E	B	C
24 VAC (hot)	24 VAC (neutral)	Network +	Network -	Network Common	RJ-45 CAT5 or greater	4 probes x 1 sensor/probe	8 probes x 1 sensor/probe

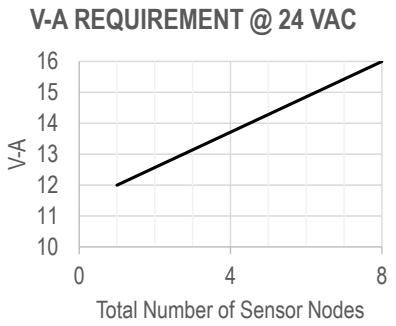

INSTRUCTIONS TO INSTALLER:

1. Mount the transmitter in a location where all probe cables can reach the receptacles of the transmitter. Provide a weatherproof enclosure (by others) and mount away from direct sunlight when outdoor mounting is required.
2. Connect the sensor probes to the transmitter. Although probes are "plug and play" and connections to specific receptacles are not required, it is recommended that probes are connected Probe 1 to receptacle C1, Probe 2 to receptacle C2, etc. Probe numbers are indicated on each cable hang tag.

⚠ *Fan array models (-F/An) must follow this convention if two probes are located in each fan inlet and the individual fan airflow rates are required and/or the fan alarm is enabled (i.e. put probes for fan 1 in C1 and C2, fan 2 in C3 and C4, etc.).*

ⓘ *Cables have an FEP plenum rated jacket that are UV tolerant and suitable for operation over the entire operating temperature range of the device.*

⚠ *Sensor probe plugs are keyed and NOT twist-lock. Align the key and push the plug onto the transmitter receptacle. Twisting may damage the connector pins.*

3. Select a 24 VAC transformer that provides 22.8 to 26.4 VAC during operation. Refer to the chart above to optimize the transformer size or size the transformer for 16 V-A for each measurement location.

⚠ *Multiple transmitters wired to a single transformer must be wired "in-phase" (L1 to L1 and L2 to L2).*

4. If the RS-485 connection is required continue to step 5, otherwise skip to step 7.
5. Connect to an RS-485 network (BACnet MS/TP or Modbus RTU), if required, using a 3-conductor network cable meeting the corresponding BACnet or Modbus standards. Ensure that all three connections, N+, N- and NC are connected.

⚠ *If a 2-conductor network cable or other non-conforming cable is used, network speed, length and reliability may be compromised or network failure may occur.*

6. If the transmitter is the first device on the network run, configure SW1 on the output card for "failsafe-bias". If the transmitter is the last device on the network run, configure SW1 for "end-of-line". Otherwise, configure SW1 for no termination (default).

SW1 - RS-485 TERMINATION DIP SWITCH POSITIONS				
1	2	3	4	TERMINATION
OFF	OFF	OFF	OFF	No termination (default)
OFF	ON	ON	OFF	End of Line
ON	OFF	OFF	ON	Fail-Safe Bias

7. If the Ethernet connection is required continue to step 8, otherwise skip to step 9.
8. Connect to an Ethernet network (BACnet Ethernet, BACnet IP, Modbus TCP or TCP/IP), if required, using a standard RJ-45 terminated Ethernet cable, CAT5 or greater.

⚠ *Use of improperly wired RJ-45 connectors may damage the Ethernet output circuit of the transmitter.*

ⓘ *The output connector terminal block on the top left side of the main circuit board is not used with this output configuration.*

9. Refer to the *GTB108-F Startup Guide* prior to moving the power switch to the "ON" position.

Advantage IV (A4) GTC108-F WIRING GUIDE

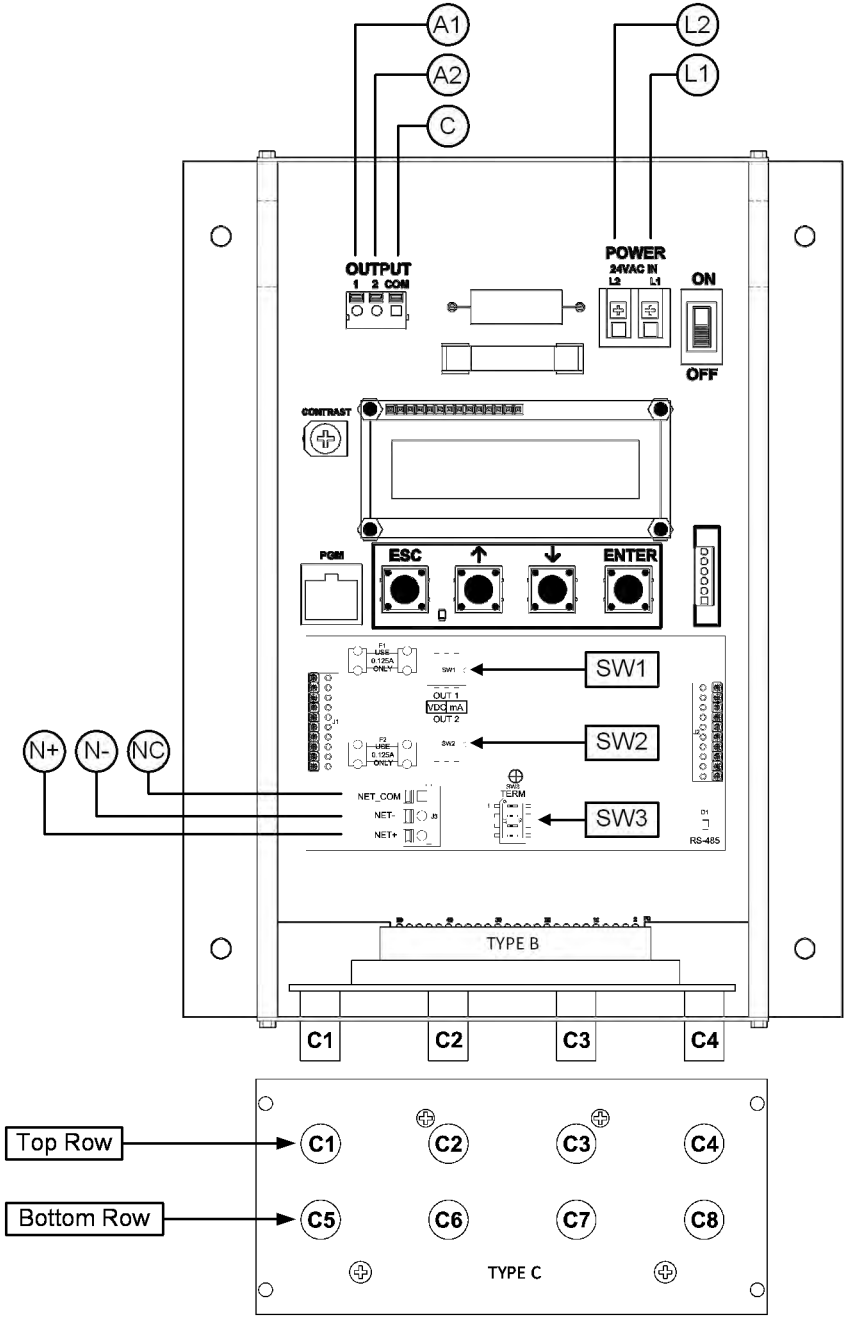

TRANSMITTER CONNECTIONS

Power		Analog Out (isolated)			RS-485 (isolated)			Type	
L1	L2	A1	A2	C	N+	N-	NC	B	C
24 VAC (hot)	24 VAC (neutral)	Airflow +	Temperature or Alarm +	Signal Common	Network +	Network -	Network Common	4 probes x 1 sensor/probe	8 probes x 1 sensor/probe

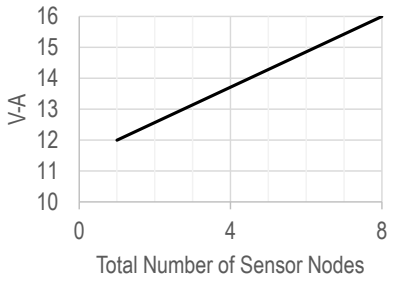

INSTRUCTIONS TO INSTALLER:

1. Mount the transmitter in a location where all probe cables can reach the receptacles of the transmitter. Provide a weatherproof enclosure (by others) and mount away from direct sunlight when outdoor mounting is required.
2. Connect the sensor probes to the transmitter. Although probes are "plug and play" and connections to specific receptacles are not required, it is recommended that probes are connected Probe 1 to receptacle C1, Probe 2 to receptacle C2, etc. Probe numbers are indicated on each cable hang tag.

⚠ *Fan array models (-F/An) must follow this convention if two probes are located in each fan inlet and the individual fan airflow rates are required and/or the fan alarm is enabled (i.e. put probes for fan 1 in C1 and C2, fan 2 in C3 and C4, etc.).*

ⓘ *Cables have an FEP plenum rated jacket that are UV tolerant and suitable for operation over the entire operating temperature range of the device.*

⚠ *Sensor probe plugs are keyed and NOT twist-lock. Align the key and push the plug onto the transmitter receptacle. Twisting may damage the connector pins.*

3. Select a 24 VAC transformer that provides 22.8 to 26.4 VAC during operation. Refer to the chart above to optimize the transformer size or size the transformer for 16 V-A for each measurement location.

⚠ *Multiple transmitters wired to a single transformer must be wired "in-phase" (L1 to L1 and L2 to L2).*

4. If analog output signals are used, continue to step 5, otherwise skip to step 6.
5. Connect each analog output signal required to the host B.A.S. using shielded twisted-pair wire. Properly terminate the shield (typically at the B.A.S.).

⚠ *If twisted pair wire and/or shielded cable is not used, extraneous electrical noise can be picked up between the transmitter and host control panel.*

6. If the RS-485 connection is required continue to step 7, otherwise skip to step 9.
7. Connect to an RS-485 network (BACnet MS/TP or Modbus RTU), if required, using a 3-conductor network cable meeting the corresponding BACnet or Modbus standards. Ensure that all three connections, N+, N- and NC are connected.

⚠ *If a 2-conductor network cable or other non-conforming cable is used, network speed, length and reliability may be compromised or network failure may occur.*

8. If the transmitter is the first device on the network run, configure SW3 on the output card for “failsafe-bias”. If the transmitter is the last device on the network run, configure SW3 for “end-of-line”. Otherwise, configure SW3 for no termination (default).

SW3 - RS-485 TERMINATION DIP SWITCH POSITIONS				
1	2	3	4	TERMINATION
OFF	OFF	OFF	OFF	No termination (default)
OFF	ON	ON	OFF	End of Line
ON	OFF	OFF	ON	Fail-Safe Bias

9. Refer to the *GTC108-F Startup Guide* prior to moving the power switch to the “ON” position.

Advantage IV (A4) GTC108e-F WIRING GUIDE

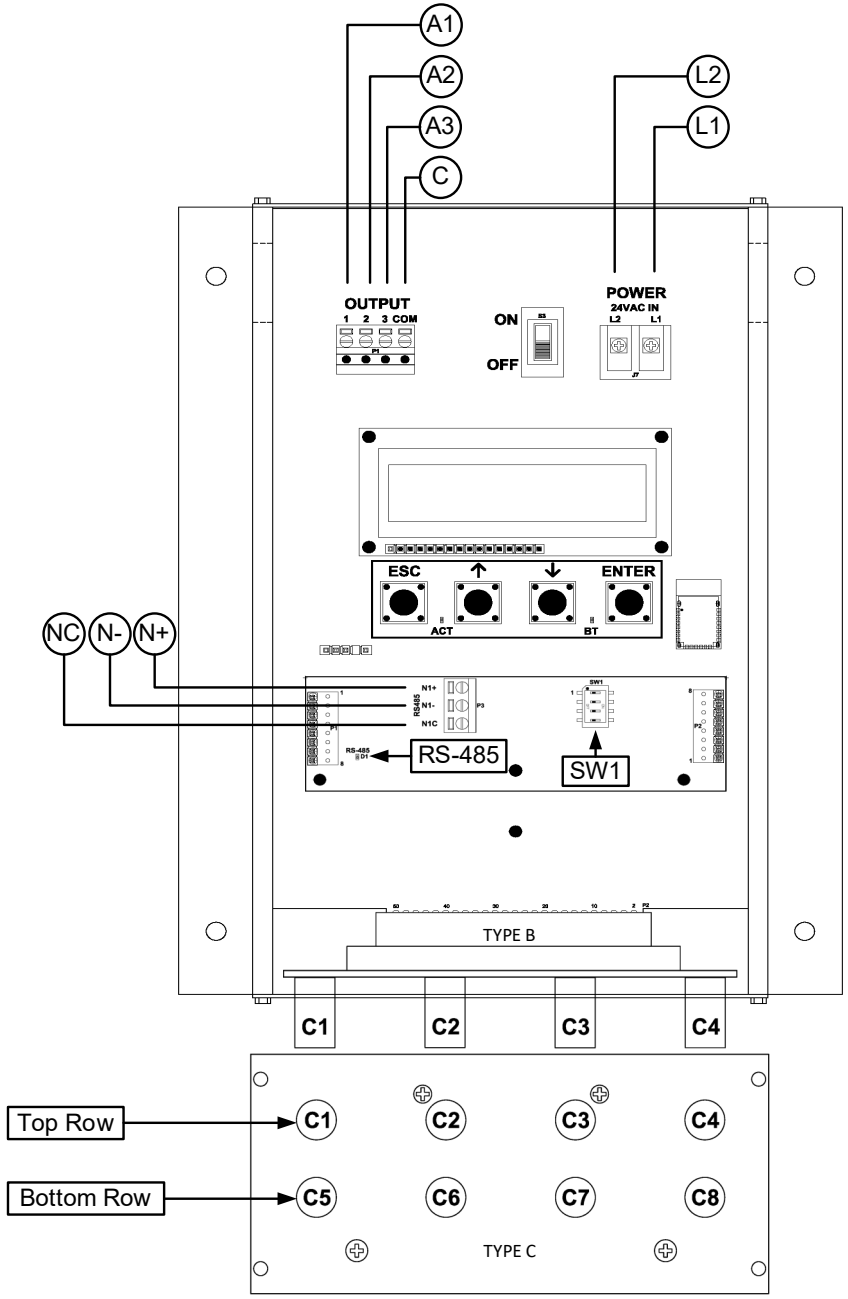

TRANSMITTER CONNECTIONS

Power		Analog Out (isolated)				RS-485 (isolated)			Type	
L1	L2	A1	A2	A3	C	N+	N-	NC	B	C
24 VAC (hot)	24 VAC (neutral)	Airflow +	Temperature or Alarm +	N/A	Signal Common	Network +	Network -	Network Common	4 probes x 1 sensor/probe	8 probes x 1 sensor/probe

V-A REQUIREMENT @ 24 VAC

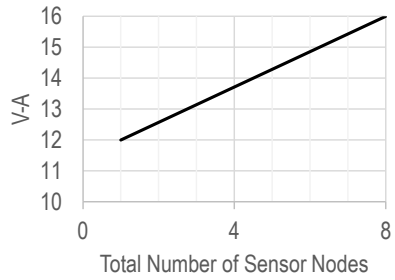

INSTRUCTIONS TO INSTALLER:

1. Mount the transmitter in a location where all probe cables can reach the receptacles of the transmitter. Provide a weatherproof enclosure (by others) and mount away from direct sunlight when outdoor mounting is required.
2. Connect the sensor probes to the transmitter. Although probes are "plug and play" and connections to specific receptacles are not required, it is recommended that probes are connected Probe 1 to receptacle C1, Probe 2 to receptacle C2, etc. Probe numbers are indicated on each cable hang tag.

⚠ *Fan array models (-F/An) must follow this convention if two probes are located in each fan inlet and the individual fan airflow rates are required and/or the fan alarm is enabled (i.e. put probes for fan 1 in C1 and C2, fan 2 in C3 and C4, etc.).*

ⓘ *Cables have an FEP plenum rated jacket that are UV tolerant and suitable for operation over the entire operating temperature range of the device.*

⚠ *Sensor probe plugs are keyed and NOT twist-lock. Align the key and push the plug onto the transmitter receptacle. Twisting may damage the connector pins.*

3. Select a 24 VAC transformer that provides 22.8 to 26.4 VAC during operation. Refer to the chart above to optimize the transformer size or size the transformer for 16 V-A for each measurement location.

⚠ *Multiple transmitters wired to a single transformer must be wired "in-phase" (L1 to L1 and L2 to L2).*

4. If analog output signals are used, continue to step 5, otherwise skip to step 6.
5. Connect each analog output signal required to the host B.A.S. using shielded twisted-pair wire. Properly terminate the shield (typically at the B.A.S.).

⚠ *If twisted pair wire and/or shielded cable is not used, extraneous electrical noise can be picked up between the transmitter and host control panel.*

6. If the RS-485 connection is required continue to step 7, otherwise skip to step 9.
7. Connect to an RS-485 network (BACnet MS/TP or Modbus RTU), if required, using a 3-conductor network cable meeting the corresponding BACnet or Modbus standards. Ensure that all three connections, N+, N- and NC are connected.

⚠ *If a 2-conductor network cable or other non-conforming cable is used, network speed, length and reliability may be compromised or network failure may occur.*

8. If the transmitter is the first device on the network run, configure SW1 on the output card for “failsafe-bias”. If the transmitter is the last device on the network run, configure SW1 for “end-of-line”. Otherwise, configure SW1 for no termination (default).

SW1 - RS-485 TERMINATION DIP SWITCH POSITIONS				
1	2	3	4	TERMINATION
OFF	OFF	OFF	OFF	No termination (default)
OFF	ON	ON	OFF	End of Line
ON	OFF	OFF	ON	Fail-Safe Bias

9. Refer to the *GTC108e-F Startup Guide* prior to moving the power switch to the “ON” position.

Advantage IV (A4) GTD108-F WIRING GUIDE

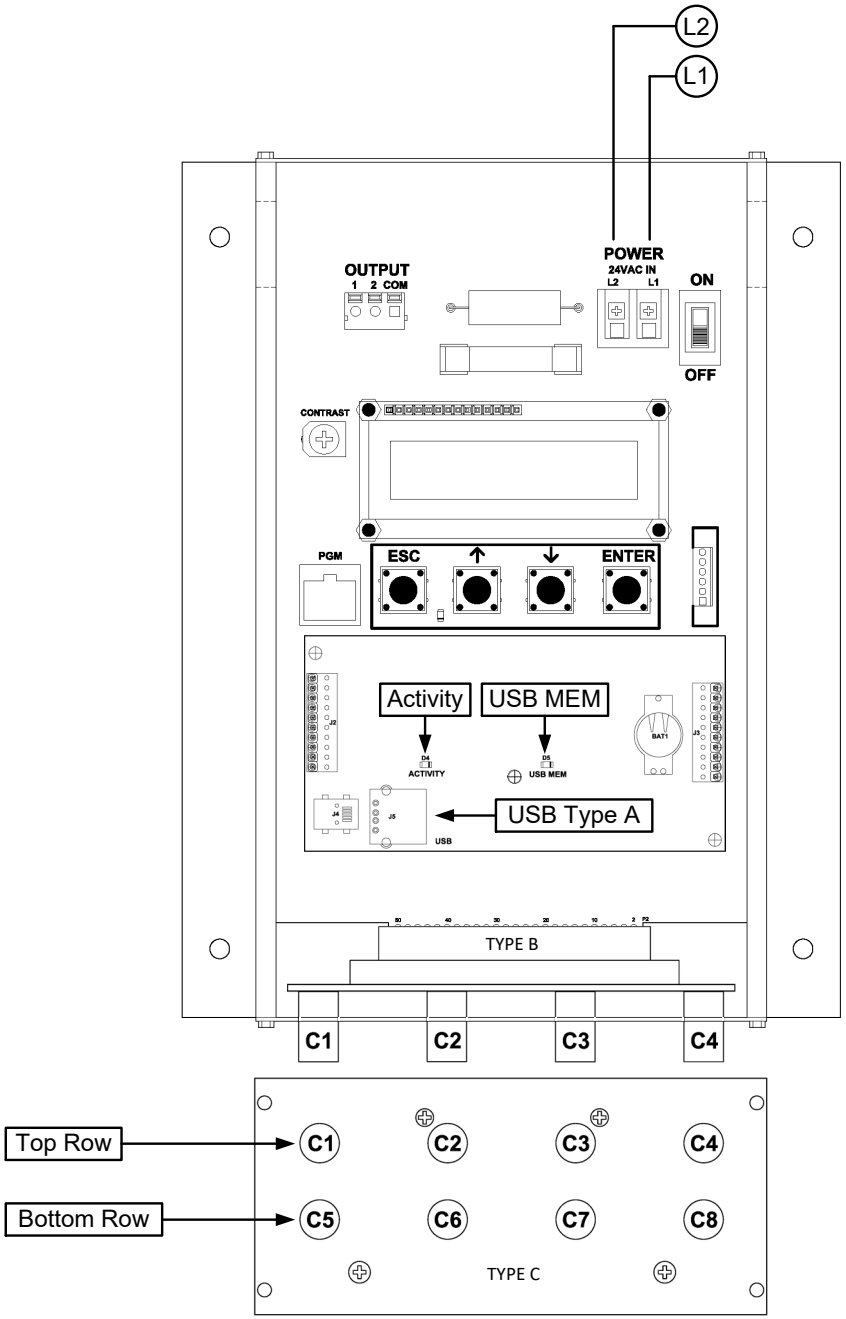

TRANSMITTER CONNECTIONS

Power		Type	
L1	L2	B	C
24 VAC (hot)	24 VAC (neutral)	4 probes x 1 sensor/probe	8 probes x 1 sensor/probe

V-A REQUIREMENT @ 24 VAC

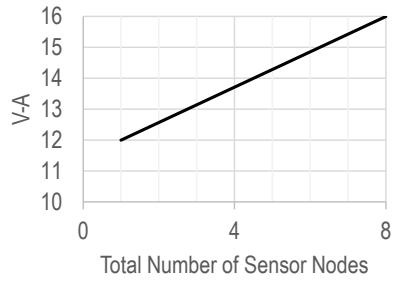

INSTRUCTIONS TO INSTALLER:

1. Mount the transmitter in a location where all probe cables can reach the receptacles of the transmitter. Provide a weatherproof enclosure (by others) and mount away from direct sunlight when outdoor mounting is required.
2. Connect the sensor probes to the transmitter. Although probes are "plug and play" and connections to specific receptacles are not required, it is recommended that probes are connected Probe 1 to receptacle C1, Probe 2 to receptacle C2, etc. Probe numbers are indicated on each cable hang tag.

⚠ *Fan array models (-F/An) must follow this convention if two probes are located in each fan inlet and the individual fan airflow rates are required and/or the fan alarm is enabled (i.e. put probes for fan 1 in C1 and C2, fan 2 in C3 and C4, etc.).*

ⓘ *Cables have an FEP plenum rated jacket that are UV tolerant and suitable for operation over the entire operating temperature range of the device.*

⚠ *Sensor probe plugs are keyed and NOT twist-lock. Align the key and push the plug onto the transmitter receptacle. Twisting may damage the connector pins.*

3. Select a 24 VAC transformer that provides 22.8 to 26.4 VAC during operation. Refer to the chart above to optimize the transformer size or size the transformer for 16 V-A for each measurement location.

⚠ *Multiple transmitters wired to a single transformer must be wired "in-phase" (L1 to L1 and L2 to L2).*

4. Install and properly seat a USB memory device ("thumb drive") into the USB Type A connector on the option card.

It is a good practice to verify the transmitter power switch is in in the "OFF" position before inserting or removing the USB memory device..

⚠ *Always set the USB WRITE parameter to "OFF" before removing the USB memory device to avoid data loss/and or damage..*

5. Refer to the *GTD108-F Startup Guide* prior to moving the power switch to the "ON" position.

.

Advantage IV (A4) GTF108e-F WIRING GUIDE

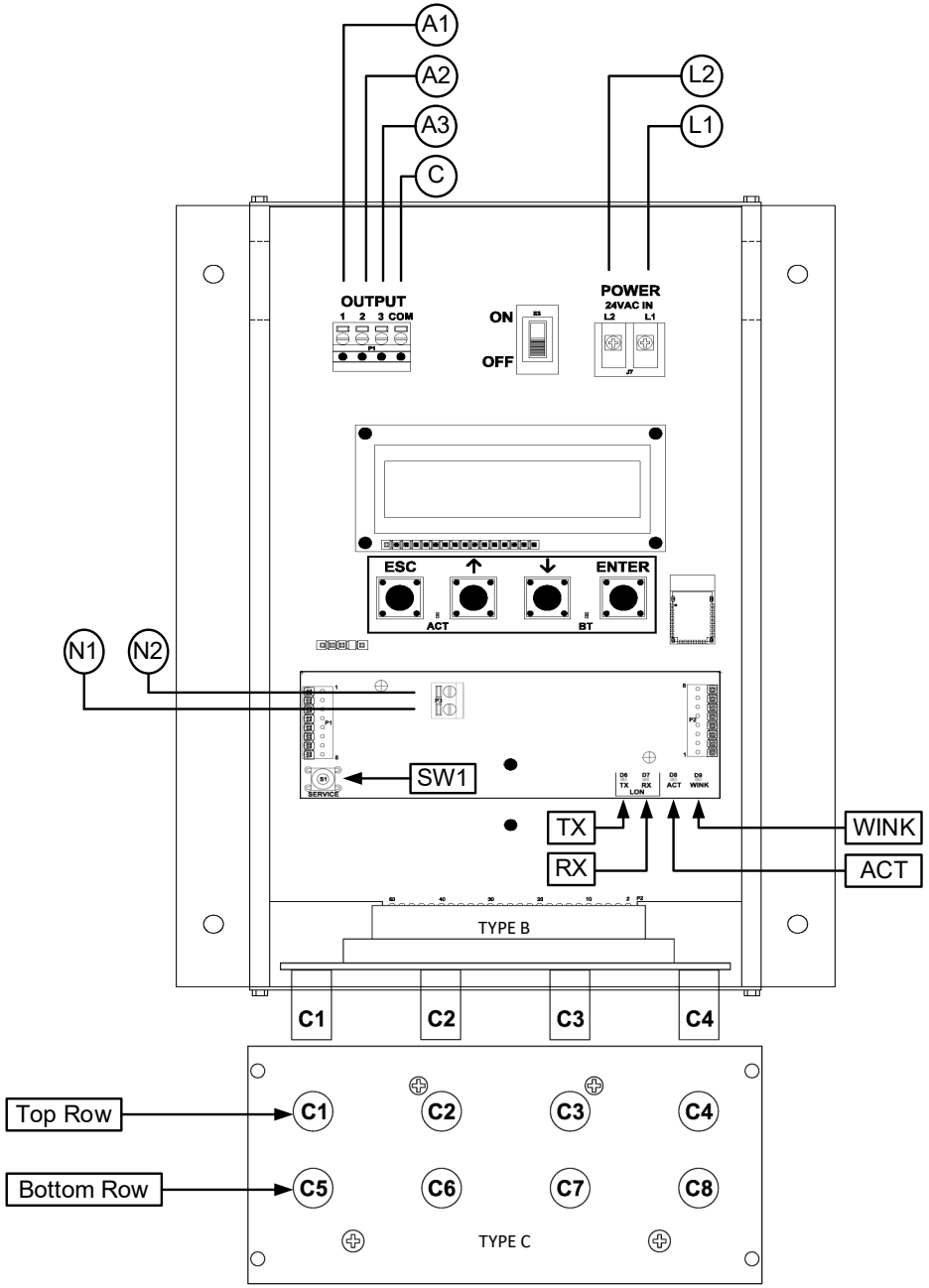

TRANSMITTER CONNECTIONS

Power		Analog Out (isolated)				Lon Network		Type	
L1	L2	A1	A2	A3	C	N1	N2	B	C
24 VAC (hot)	24 VAC (neutral)	Airflow +	Temperature or Alarm +	N/A	Signal Common	Network Pair (1 of 2)	Network Pair (2 of 2)	4 probes x 1 sensor/probe	8 probes x 1 sensor/probe

V-A REQUIREMENT @ 24 VAC

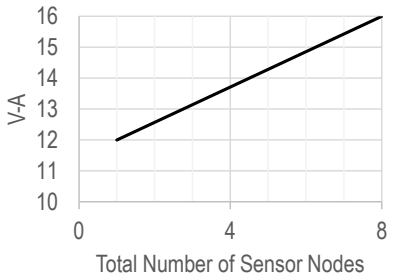

INSTRUCTIONS TO INSTALLER:

1. Mount the transmitter in a location where all probe cables can reach the receptacles of the transmitter. Provide a weatherproof enclosure (by others) and mount away from direct sunlight when outdoor mounting is required.
2. Connect the sensor probes to the transmitter. Although probes are "plug and play" and connections to specific receptacles are not required, it is recommended that probes are connected Probe 1 to receptacle C1, Probe 2 to receptacle C2, etc. Probe numbers are indicated on each cable hang tag.

⚠ *Fan array models (-F/An) must follow this convention if two probes are located in each fan inlet and the individual fan airflow rates are required and/or the fan alarm is enabled (i.e. put probes for fan 1 in C1 and C2, fan 2 in C3 and C4, etc.).*

ⓘ *Cables have an FEP plenum rated jacket that are UV tolerant and suitable for operation over the entire operating temperature range of the device.*

⚠ *Sensor probe plugs are keyed and NOT twist-lock. Align the key and push the plug onto the transmitter receptacle. Twisting may damage the connector pins.*

3. Select a 24 VAC transformer that provides 22.8 to 26.4 VAC during operation. Refer to the chart above to optimize the transformer size or size the transformer for 16 V-A for each measurement location.

⚠ *Multiple transmitters wired to a single transformer must be wired "in-phase" (L1 to L1 and L2 to L2).*

4. If analog output signals are used, continue to step 5, otherwise skip to step 6.
5. Connect each analog output signal required to the host B.A.S. using shielded twisted-pair wire. Properly terminate the shield (typically at the B.A.S.).

⚠ *If twisted pair wire and/or shielded cable is not used, extraneous electrical noise can be picked up between the transmitter and host control panel.*

6. If the LON network connection is required continue to step 7, otherwise skip to 8.
7. Connect to a LonWorks Free Topology network.

ⓘ *The network termination is polarity insensitive.*

⚠ *Use the network cable specified by Echelon (typically Belden 8471 cable or equivalent).*

8. Refer to the *GTF108e-F Startup Guide* prior to moving the power switch to the "ON" position.

Advantage IV (A4) GTL108-F WIRING GUIDE

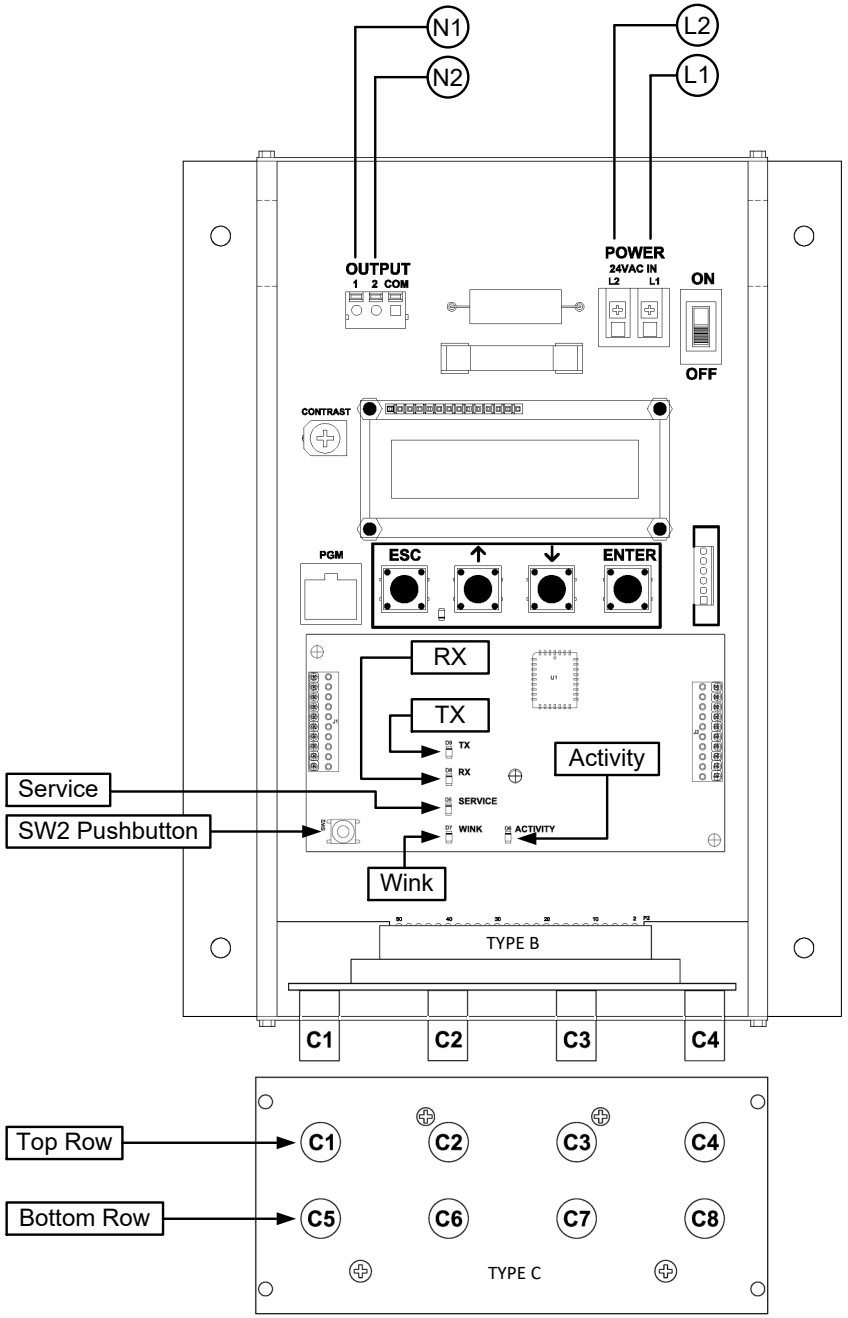

TRANSMITTER CONNECTIONS

Power		Lon Network		Type	
L1	L2	N1	N2	B	C
24 VAC (hot)	24 VAC (neutral)	Network Pair (1 of 2)	Network Pair (2 of 2)	4 probes x 1 sensor/probe	8 probes x 1 sensor/probe

V-A REQUIREMENT @ 24 VAC

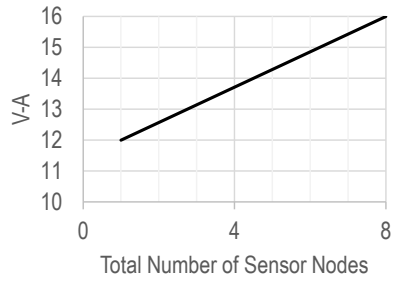

INSTRUCTIONS TO INSTALLER:

1. Mount the transmitter in a location where all probe cables can reach the receptacles of the transmitter. Provide a weatherproof enclosure (by others) and mount away from direct sunlight when outdoor mounting is required.
2. Connect the sensor probes to the transmitter. Although probes are "plug and play" and connections to specific receptacles are not required, it is recommended that probes are connected Probe 1 to receptacle C1, Probe 2 to receptacle C2, etc. Probe numbers are indicated on each cable hang tag.

⚠ *Fan array models (-F/An) must follow this convention if two probes are located in each fan inlet and the individual fan airflow rates are required and/or the fan alarm is enabled (i.e. put probes for fan 1 in C1 and C2, fan 2 in C3 and C4, etc.).*

ⓘ *Cables have an FEP plenum rated jacket that are UV tolerant and suitable for operation over the entire operating temperature range of the device.*

⚠ *Sensor probe plugs are keyed and NOT twist-lock. Align the key and push the plug onto the transmitter receptacle. Twisting may damage the connector pins.*

3. Select a 24 VAC transformer that provides 22.8 to 26.4 VAC during operation. Refer to the chart above to optimize the transformer size or size the transformer for 16 V-A for each measurement location.

⚠ *Multiple transmitters wired to a single transformer must be wired "in-phase" (L1 to L1 and L2 to L2).*

4. Connect to a LonWorks Free Topology network.

ⓘ *The network termination is polarity insensitive.*

⚠ *Use the network cable specified by Echelon (typically Belden 8471 cable or equivalent).*

5. Refer to the *GTL108-F Startup Guide* prior to moving the power switch to the "ON" position.

.

Advantage IV (A4) GTM108-F WIRING GUIDE

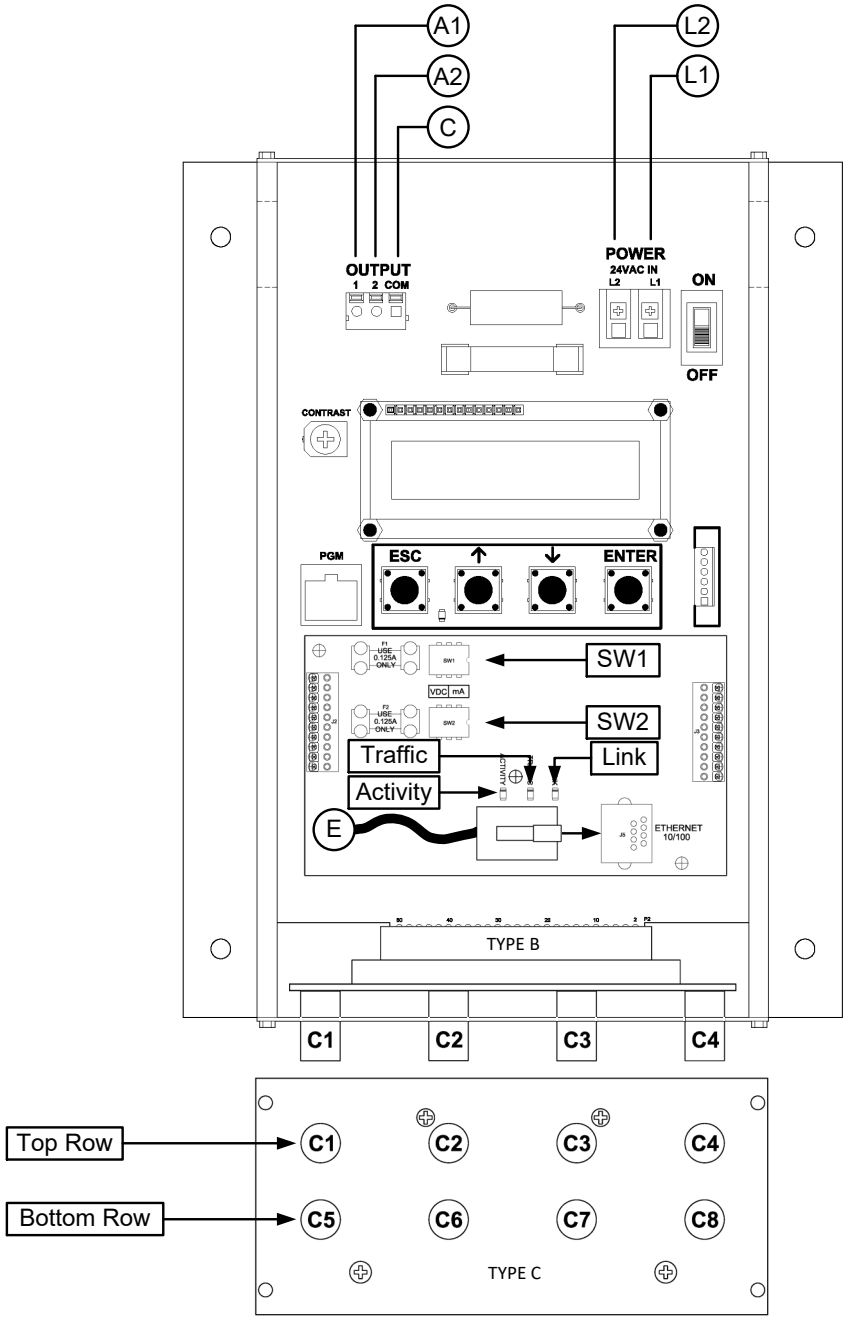

TRANSMITTER CONNECTIONS

Power		Analog Out (isolated)			Ethernet	Type	
L1	L2	A1	A2	C	E	B	C
24 VAC (hot)	24 VAC (neutral)	Airflow +	Temperature or Alarm +	Signal Common	RJ-45 CAT5 or greater	4 probes x 1 sensor/probe	8 probes x 1 sensor/probe

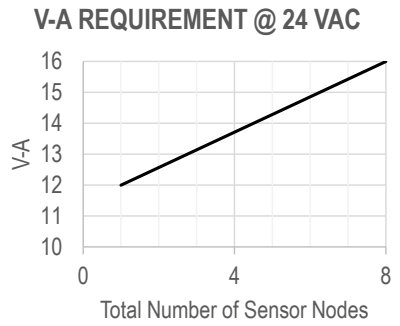

INSTRUCTIONS TO INSTALLER:

1. Mount the transmitter in a location where all probe cables can reach the receptacles of the transmitter. Provide a weatherproof enclosure (by others) and mount away from direct sunlight when outdoor mounting is required.
2. Connect the sensor probes to the transmitter. Although probes are "plug and play" and connections to specific receptacles are not required, it is recommended that probes are connected Probe 1 to receptacle C1, Probe 2 to receptacle C2, etc. Probe numbers are indicated on each cable hang tag.

⚠ *Fan array models (-F/An) must follow this convention if two probes are located in each fan inlet and the individual fan airflow rates are required and/or the fan alarm is enabled (i.e. put probes for fan 1 in C1 and C2, fan 2 in C3 and C4, etc.).*

ⓘ *Cables have an FEP plenum rated jacket that are UV tolerant and suitable for operation over the entire operating temperature range of the device.*

⚠ *Sensor probe plugs are keyed and NOT twist-lock. Align the key and push the plug onto the transmitter receptacle. Twisting may damage the connector pins.*

3. Select a 24 VAC transformer that provides 22.8 to 26.4 VAC during operation. Refer to the chart above to optimize the transformer size or size the transformer for 16 V-A for each measurement location.

⚠ *Multiple transmitters wired to a single transformer must be wired "in-phase" (L1 to L1 and L2 to L2).*

4. If analog output signals are used, continue to step 5, otherwise skip to step 6.
5. Connect each analog output signal required to the host B.A.S. using shielded twisted-pair wire. Properly terminate the shield (typically at the B.A.S.).

⚠ *If twisted pair wire and/or shielded cable is not used, extraneous electrical noise can be picked up between the transmitter and host control panel.*

6. If the Ethernet connection is required continue to step 7, otherwise skip to step 8
7. Connect to an Ethernet network (BACnet Ethernet, BACnet IP, Modbus TCP or TCP/IP), if required, using a standard RJ-45 terminated Ethernet cable, CAT5 or greater.

⚠ *Use of improperly wired RJ-45 connectors may damage the Ethernet output circuit of the transmitter.*

8. Refer to the *GTM108-F Startup Guide* prior to moving the power switch to the "ON" position.

Advantage IV (A4) GTM108e-F WIRING GUIDE

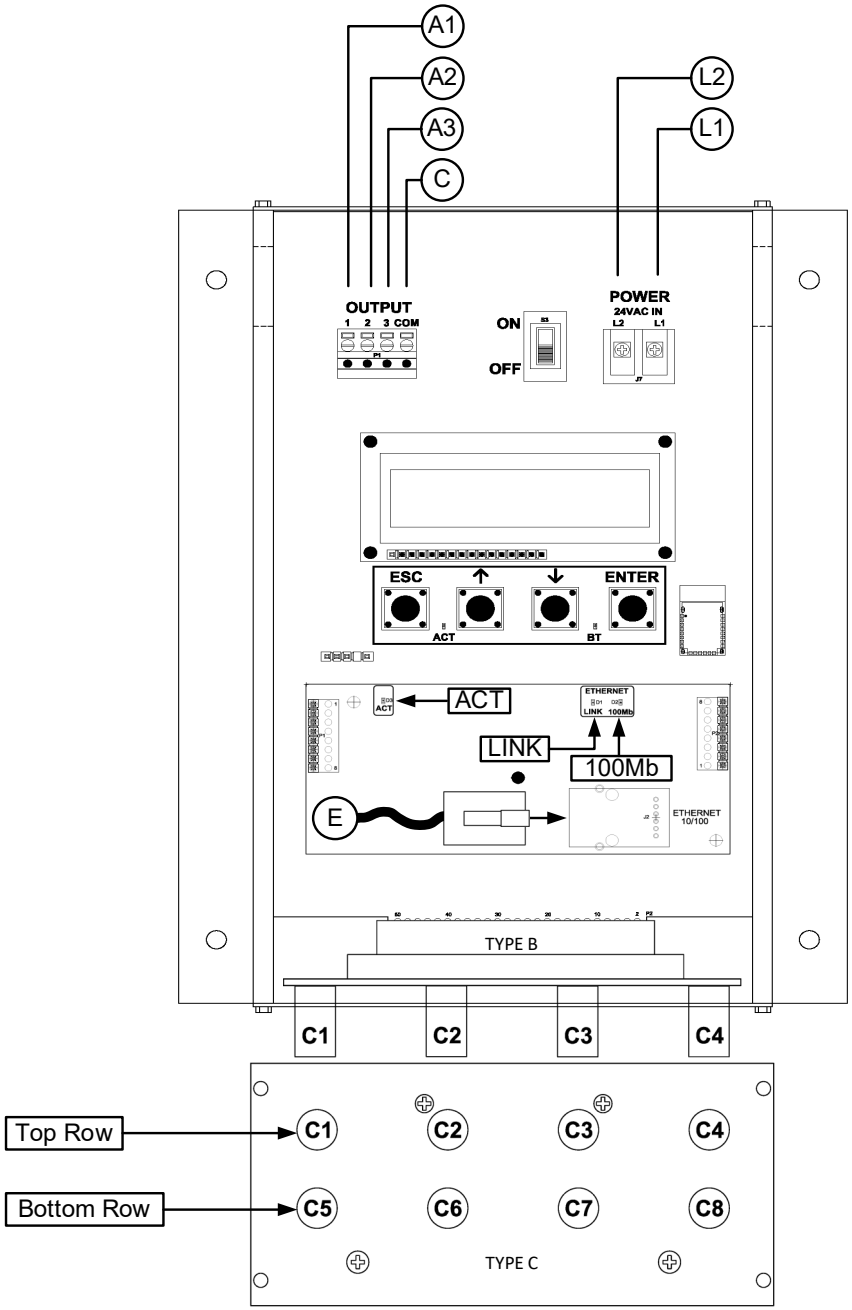

TRANSMITTER CONNECTIONS

Power		Analog Out (isolated)				Ethernet	Type	
L1	L2	A1	A2	A3	C	E	B	C
24 VAC (hot)	24 VAC (neutral)	Airflow +	Temperature or Alarm +	N/A	Signal Common	RJ-45 CAT5 or greater	4 probes x 1 sensor/probe	8 probes x 1 sensor/probe

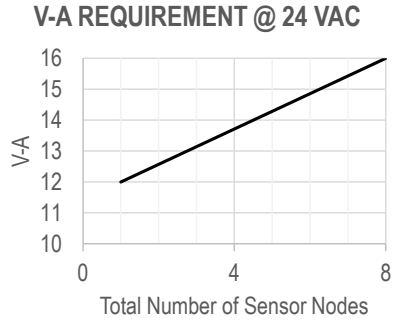

INSTRUCTIONS TO INSTALLER:

1. Mount the transmitter in a location where all probe cables can reach the receptacles of the transmitter. Provide a weatherproof enclosure (by others) and mount away from direct sunlight when outdoor mounting is required.
2. Connect the sensor probes to the transmitter. Although probes are "plug and play" and connections to specific receptacles are not required, it is recommended that probes are connected Probe 1 to receptacle C1, Probe 2 to receptacle C2, etc. Probe numbers are indicated on each cable hang tag.

⚠ *Fan array models (-F/An) must follow this convention if two probes are located in each fan inlet and the individual fan airflow rates are required and/or the fan alarm is enabled (i.e. put probes for fan 1 in C1 and C2, fan 2 in C3 and C4, etc.).*

ⓘ *Cables have an FEP plenum rated jacket that are UV tolerant and suitable for operation over the entire operating temperature range of the device.*

⚠ *Sensor probe plugs are keyed and NOT twist-lock. Align the key and push the plug onto the transmitter receptacle. Twisting may damage the connector pins.*

3. Select a 24 VAC transformer that provides 22.8 to 26.4 VAC during operation. Refer to the chart above to optimize the transformer size or size the transformer for 16 V-A for each measurement location.

⚠ *Multiple transmitters wired to a single transformer must be wired "in-phase" (L1 to L1 and L2 to L2).*

4. If analog output signals are used, continue to step 5, otherwise skip to step 6.
5. Connect each analog output signal required to the host B.A.S. using shielded twisted-pair wire. Properly terminate the shield (typically at the B.A.S.).

⚠ *If twisted pair wire and/or shielded cable is not used, extraneous electrical noise can be picked up between the transmitter and host control panel.*

6. If the Ethernet connection is required continue to step 7, otherwise skip to step 8.
7. Connect to an Ethernet network (BACnet Ethernet, BACnet IP, Modbus TCP or TCP/IP), if required, using a standard RJ-45 terminated Ethernet cable, CAT5 or greater.

⚠ *Use of improperly wired RJ-45 connectors may damage the Ethernet output circuit of the transmitter.*

8. Refer to the *GTM108e-F Startup Guide* prior to moving the power switch to the "ON" position.

Advantage IV (A4) GTU108e-F WIRING GUIDE

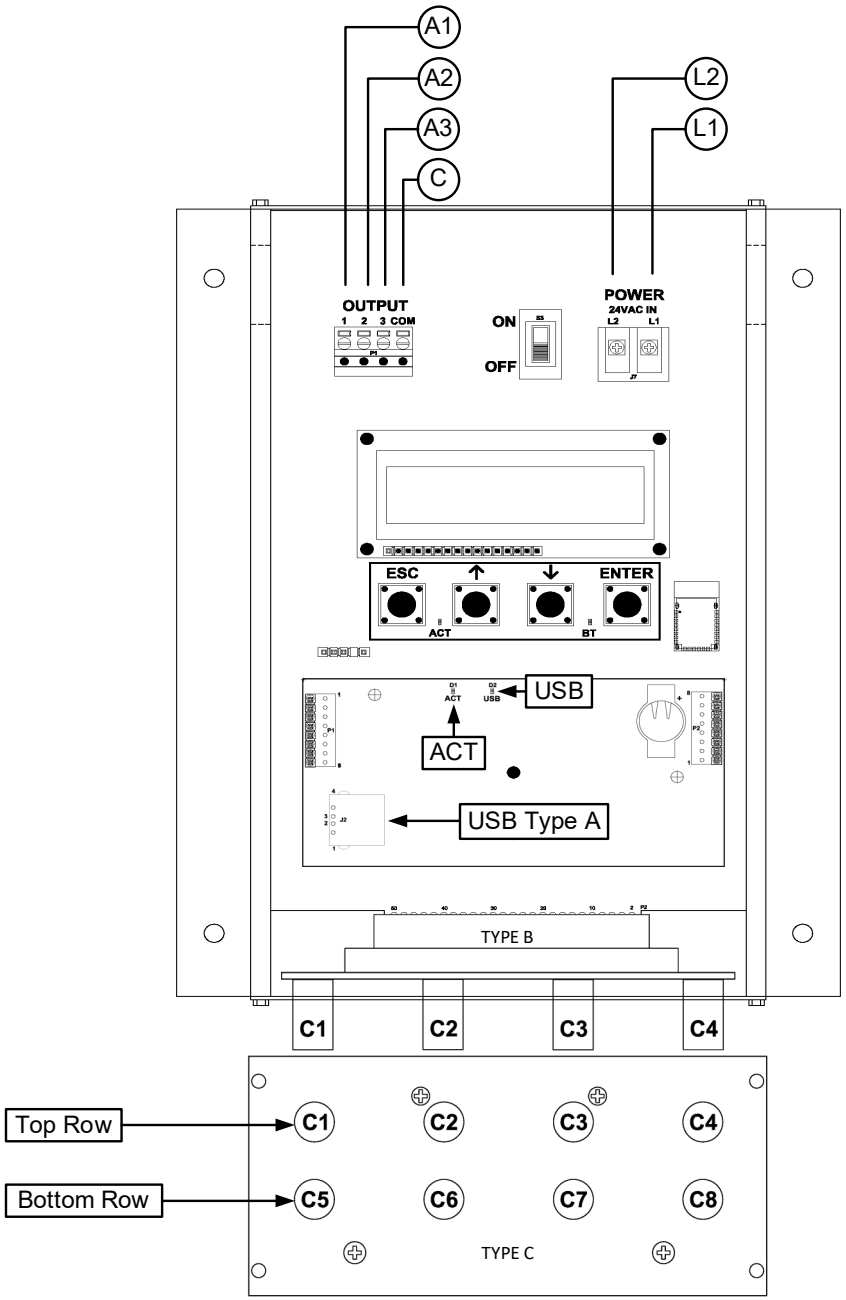

TRANSMITTER CONNECTIONS

Power		Analog Out (isolated)				Type	
L1	L2	A1	A2	A3	C	B	C
24 VAC (hot)	24 VAC (neutral)	Airflow +	Temperature or Alarm +	N/A	Signal Common	4 probes x 1 sensor/probe	8 probes x 1 sensor/probe

V-A REQUIREMENT @ 24 VAC

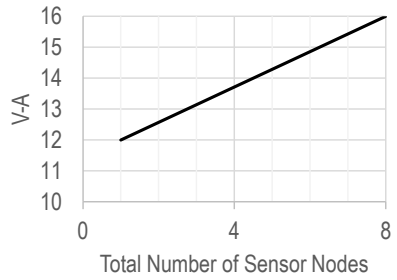

INSTRUCTIONS TO INSTALLER:

1. Mount the transmitter in a location where all probe cables can reach the receptacles of the transmitter. Provide a weatherproof enclosure (by others) and mount away from direct sunlight when outdoor mounting is required.
2. Connect the sensor probes to the transmitter. Although probes are "plug and play" and connections to specific receptacles are not required, it is recommended that probes are connected Probe 1 to receptacle C1, Probe 2 to receptacle C2, etc. Probe numbers are indicated on each cable hang tag.

⚠ *Fan array models (-F/An) must follow this convention if two probes are located in each fan inlet and the individual fan airflow rates are required and/or the fan alarm is enabled (i.e. put probes for fan 1 in C1 and C2, fan 2 in C3 and C4, etc.).*

ⓘ *Cables have an FEP plenum rated jacket that are UV tolerant and suitable for operation over the entire operating temperature range of the device.*

⚠ *Sensor probe plugs are keyed and NOT twist-lock. Align the key and push the plug onto the transmitter receptacle. Twisting may damage the connector pins.*

3. Select a 24 VAC transformer that provides 22.8 to 26.4 VAC during operation. Refer to the chart above to optimize the transformer size or size the transformer for 16 V-A for each measurement location.

⚠ *Multiple transmitters wired to a single transformer must be wired "in-phase" (L1 to L1 and L2 to L2).*

4. If analog output signals are used, continue to step 5, otherwise skip to step 6.
5. Connect each analog output signal required to the host B.A.S. using shielded twisted-pair wire. Properly terminate the shield (typically at the B.A.S.).

⚠ *If twisted pair wire and/or shielded cable is not used, extraneous electrical noise can be picked up between the transmitter and host control panel.*

6. If USB memory device connection is required continue to step 7, otherwise skip to step 8.
7. Install and properly seat a USB memory device ("thumb drive") into the USB Type A connector on the option card.

✓ *It is a good practice to verify the transmitter power switch is in in the "OFF" position before inserting or removing the USB memory device..*

⚠ *Always set the USB WRITE parameter to "OFF" before removing the USB memory device to avoid data loss/and or damage..*

8. Refer to the *GTU108e-F Startup Guide* prior to moving the power switch to the "ON" position.

Advantage IV (A4) GTW108-F WIRING GUIDE

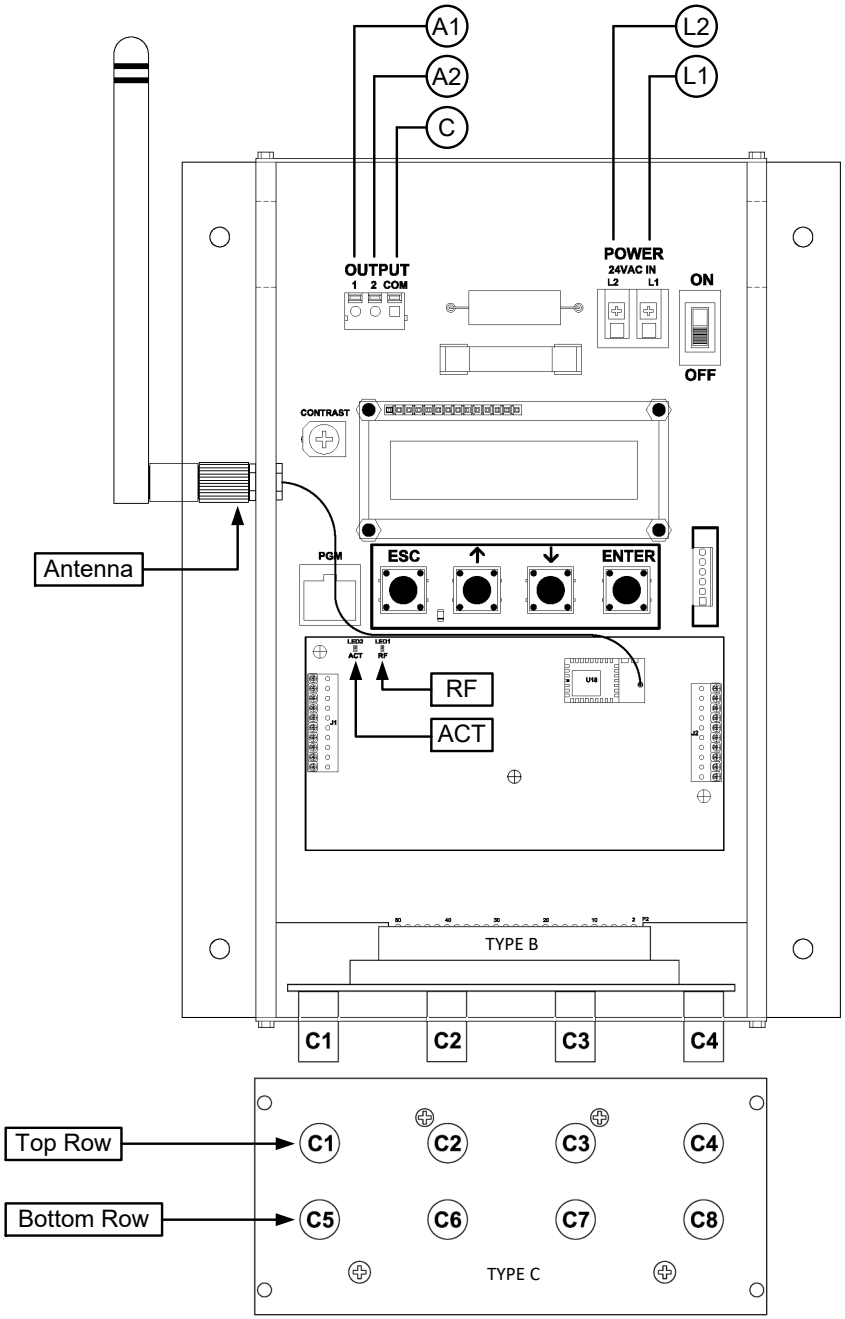

TRANSMITTER CONNECTIONS

Power		Analog Out (isolated)			Type	
L1	L2	A1	A2	C	B	C
24 VAC (hot)	24 VAC (neutral)	Airflow +	Temperature or Alarm +	Signal Common	4 probes x 1 sensor/probe	8 probes x 1 sensor/probe

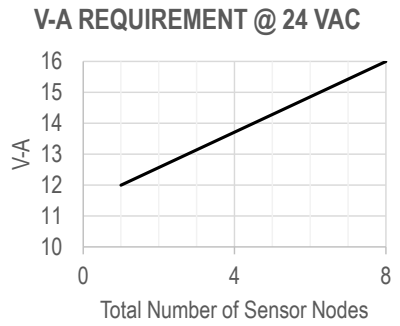

INSTRUCTIONS TO INSTALLER:

1. Mount the transmitter in a location where all probe cables can reach the receptacles of the transmitter. Provide a weatherproof enclosure (by others) and mount away from direct sunlight when outdoor mounting is required.

ⓘ *Although the wireless radio does not require a clear line of sight between the transmitter and receiving device, a large mass of metal or another RF interference source could degrade signal strength and adversely affect the RF transmission. Note any obstructions between the transmitter and receiving device and avoid placing the transmitter and receiving device between obstructions, whenever possible.*

2. Connect the sensor probes to the transmitter. Although probes are "plug and play" and connections to specific receptacles are not required, it is recommended that probes are connected Probe 1 to receptacle C1, Probe 2 to receptacle C2, etc. Probe numbers are indicated on each cable hang tag.

⚠ *Fan array models (-F/An) must follow this convention if two probes are located in each fan inlet and the individual fan airflow rates are required and/or the fan alarm is enabled (i.e. put probes for fan 1 in C1 and C2, fan 2 in C3 and C4, etc.).*

ⓘ *Cables have an FEP plenum rated jacket that are UV tolerant and suitable for operation over the entire operating temperature range of the device.*

⚠ *Sensor probe plugs are keyed and NOT twist-lock. Align the key and push the plug onto the transmitter receptacle. Twisting may damage the connector pins.*

3. Select a 24 VAC transformer that provides 22.8 to 26.4 VAC during operation. Refer to the chart above to optimize the transformer size or size the transformer for 16 V-A for each measurement location.

⚠ *Multiple transmitters wired to a single transformer must be wired "in-phase" (L1 to L1 and L2 to L2).*

4. If analog output signals are used, continue to step 5, otherwise skip to step 6.
5. Connect each analog output signal required to the host B.A.S. using shielded twisted-pair wire. Properly terminate the shield (typically at the B.A.S.).

⚠ *If twisted pair wire and/or shielded cable is not used, extraneous electrical noise can be picked up between the transmitter and host control panel.*

6. *Connect the antenna provided to the transmitter by screwing it into the SMA connector located on the top left of the transmitter enclosure. Make sure the antenna is pointing upward.*
7. Refer to the *GTW108-F Startup Guide* prior to moving the power switch to the "ON" position.

Advantage IV (A4) HTA104-F WIRING GUIDE

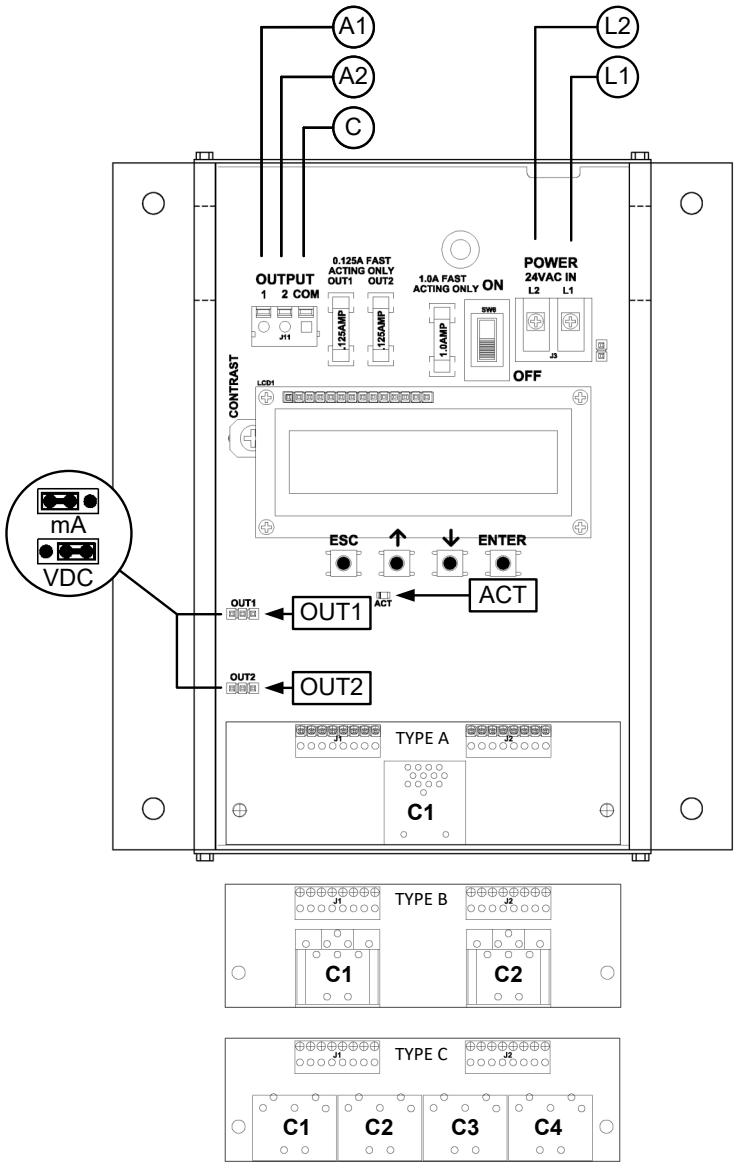

TRANSMITTER CONNECTIONS

Power		Analog Out (isolated)			Type
L1	L2	A1	A2	C	C
24 VAC (hot)	24 VAC (neutral)	Airflow +	Temperature or Alarm +	Signal Common	4 probes x 1 sensor/probe

V-A REQUIREMENT @ 24 VAC

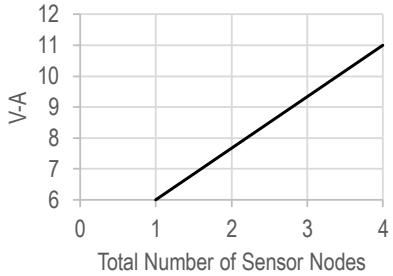

INSTRUCTIONS TO INSTALLER:

1. Mount the transmitter in a location where all probe cables can reach the receptacles of the transmitter. Provide a weatherproof enclosure (by others) and mount away from direct sunlight when outdoor mounting is required.
2. Connect the sensor probes to the transmitter. Although probes are "plug and play" and connections to specific receptacles are not required, it is recommended that probes are connected Probe 1 to receptacle C1, Probe 2 to receptacle C2, etc. Probe numbers are indicated on each cable hang tag.

ⓘ *Cables have an FEP plenum rated jacket that are UV tolerant and suitable for operation over the entire operating temperature range of the device.*

⚠ *Sensor probe plugs are keyed and NOT twist-lock. Align the key and push the plug onto the transmitter receptacle. Twisting may damage the connector pins.*

3. Select a 24 VAC transformer that provides 22.8 to 26.4 VAC during operation. Refer to the chart above to optimize the transformer size or size the transformer for 11 V-A for each measurement location.

⚠ *Multiple transmitters wired to a single transformer must be wired "in-phase" (L1 to L1 and L2 to L2).*

4. If analog output signals are used, continue to step 5, otherwise skip to step 6.
5. Connect each analog output signal required to the host B.A.S. using shielded twisted-pair wire. Properly terminate the shield (typically at the B.A.S.).

⚠ *If twisted pair wire and/or shielded cable is not used, extraneous electrical noise can be picked up between the transmitter and host control panel.*

6. Refer to the *HTA104-F Startup Guide* prior to moving the power switch to the "ON" position.

Advantage IV (A4) HTN104-F WIRING GUIDE

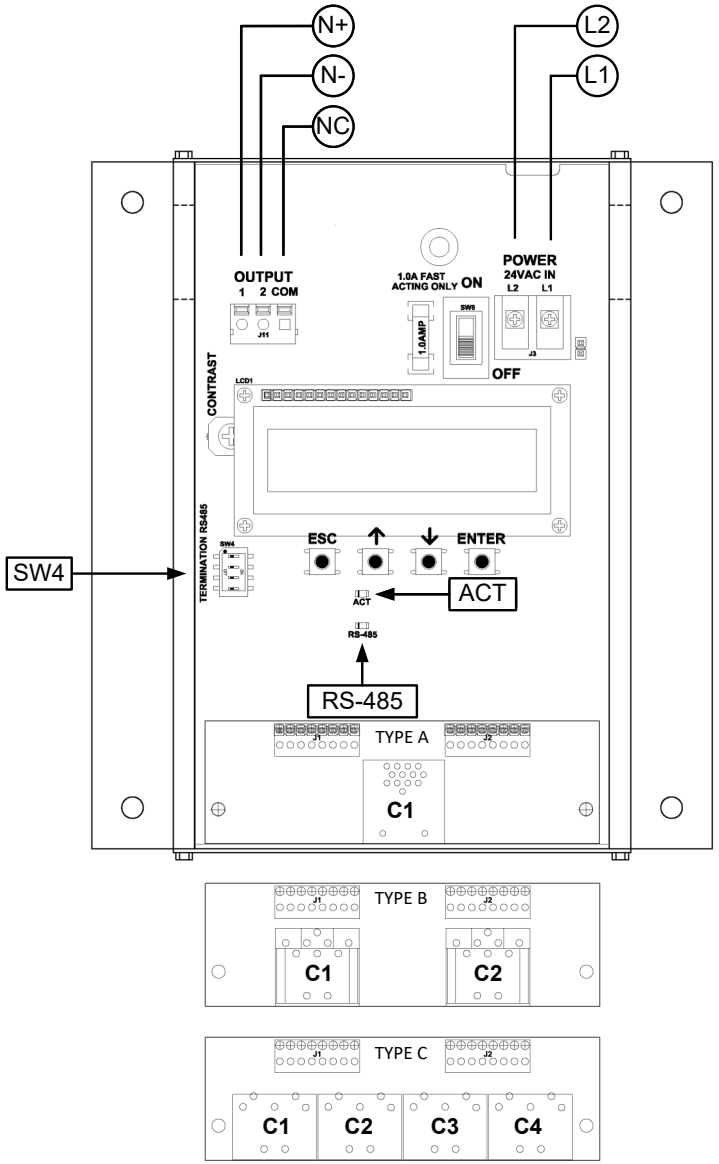

TRANSMITTER CONNECTIONS

Power		RS-485 (isolated)			Type
L1	L2	N+	N-	NC	C
24 VAC (hot)	24 VAC (neutral)	Network +	Network -	Network Common	4 probes x 1 sensor/probe

V-A REQUIREMENT @ 24 VAC

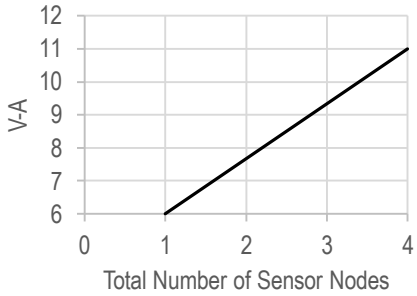

INSTRUCTIONS TO INSTALLER:

1. Mount the transmitter in a location where all probe cables can reach the receptacles of the transmitter. Provide a weatherproof enclosure (by others) and mount away from direct sunlight when outdoor mounting is required.
2. Connect the sensor probes to the transmitter. Although probes are "plug and play" and connections to specific receptacles are not required, it is recommended that probes are connected Probe 1 to receptacle C1, Probe 2 to receptacle C2, etc. Probe numbers are indicated on each cable hang tag.

ⓘ *Cables have an FEP plenum rated jacket that are UV tolerant and suitable for operation over the entire operating temperature range of the device.*

⚠ *Sensor probe plugs are keyed and NOT twist-lock. Align the key and push the plug onto the transmitter receptacle. Twisting may damage the connector pins.*

3. Select a 24 VAC transformer that provides 22.8 to 26.4 VAC during operation. Refer to the chart above to optimize the transformer size or size the transformer for 11 V-A for each measurement location.

⚠ *Multiple transmitters wired to a single transformer must be wired "in-phase" (L1 to L1 and L2 to L2).*

4. If the RS-485 connection is required continue to step 5, otherwise skip to step 7.
5. Connect to an RS-485 network (BACnet MS/TP or Modbus RTU), if required, using a 3-conductor network cable meeting the corresponding BACnet or Modbus standards. Ensure that all three connections, N+, N- and NC are connected.

⚠ *If a 2-conductor network cable or other non-conforming cable is used, network speed, length and reliability may be compromised or network failure may occur.*

6. If the transmitter is the first device on the network run, configure SW4 on the output card for "failsafe-bias". If the transmitter is the last device on the network run, configure SW4 for "end-of-line". Otherwise, configure SW4 for no termination (default).

SW4 - RS-485 TERMINATION DIP SWITCH POSITIONS

1	2	3	4	TERMINATION
OFF	OFF	OFF	OFF	No termination (default)
OFF	ON	ON	OFF	End of Line
ON	OFF	OFF	ON	Fail-Safe Bias

7. Refer to the *HTN104-F Startup Guide* prior to moving the power switch to the "ON" position.

Advantage IV (A4) HTA104-B WIRING GUIDE

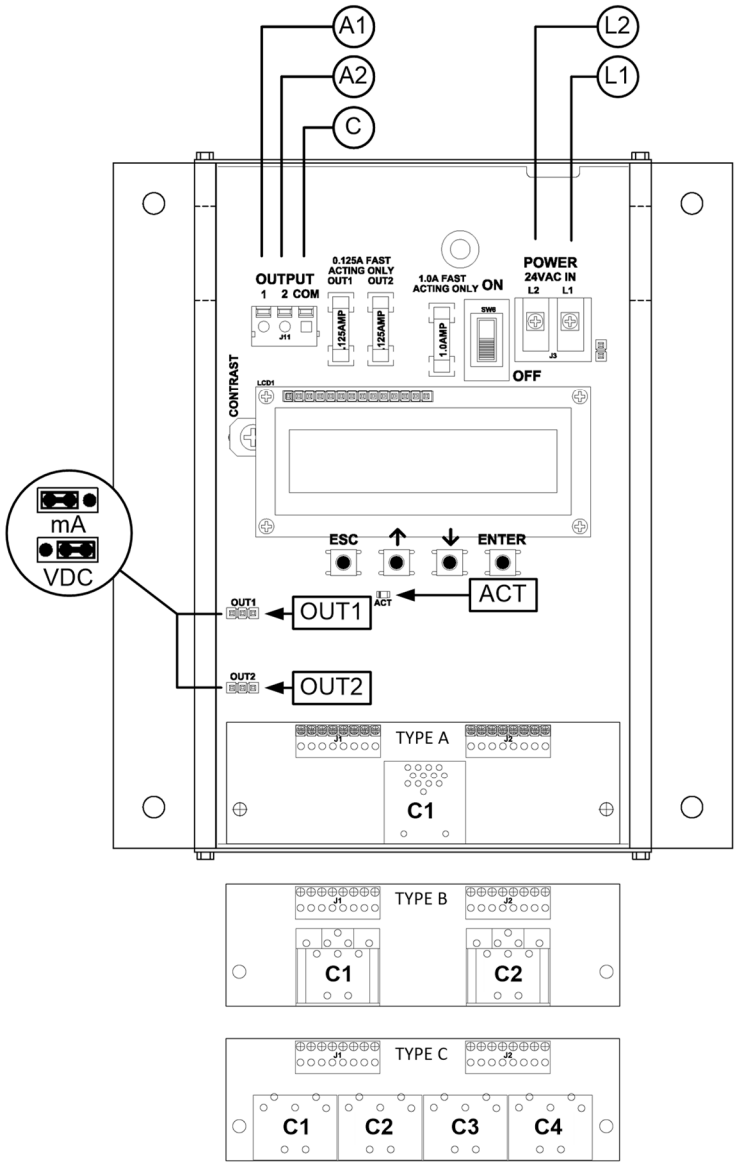

TRANSMITTER CONNECTIONS

Power		Analog Out (isolated)			Connector Type B	
L1	L2	A1	A2	C	C1	C2
24 VAC (hot)	24 VAC (neutral)	Airflow (or Pressure) +	Temperature or Alarm +	Signal Common	Bleed Sensor	Not Used

INSTRUCTIONS TO INSTALLER:

1. Mount the transmitter in a location where the bleed sensor cable can reach the receptacle of the transmitter. Provide a weatherproof enclosure (by others) and mount away from direct sunlight when outdoor mounting is required.
2. Connect the bleed sensor cable to connector C1 of the transmitter. Connector C2 is not used in this configuration.

ⓘ *Cables have an FEP plenum rated jacket that are UV tolerant and suitable for operation over the entire operating temperature range of the device.*

⚠ *Sensor probe plugs are keyed and NOT twist-lock. Align the key and push the plug onto the transmitter receptacle. Twisting may damage the connector pins.*

3. Select a 24 VAC transformer that provides 22.8 to 26.4 VAC during operation. Size the transformer for 8 V-A for each measurement location.

⚠ *Multiple transmitters wired to a single transformer must be wired "in-phase" (L1 to L1 and L2 to L2).*

4. If analog output signals are used, continue to step 5, otherwise skip to step 6.
5. Connect each analog output signal required to the host B.A.S. using shielded twisted-pair wire. Properly terminate the shield (typically at the B.A.S.).

⚠ *If twisted pair wire and/or shielded cable is not used, extraneous electrical noise can be picked up between the transmitter and host control panel.*

6. Refer to the *HTA104-B Startup Guide* prior to moving the power switch to the "ON" position.

Advantage IV (A4) HTN104-B WIRING GUIDE

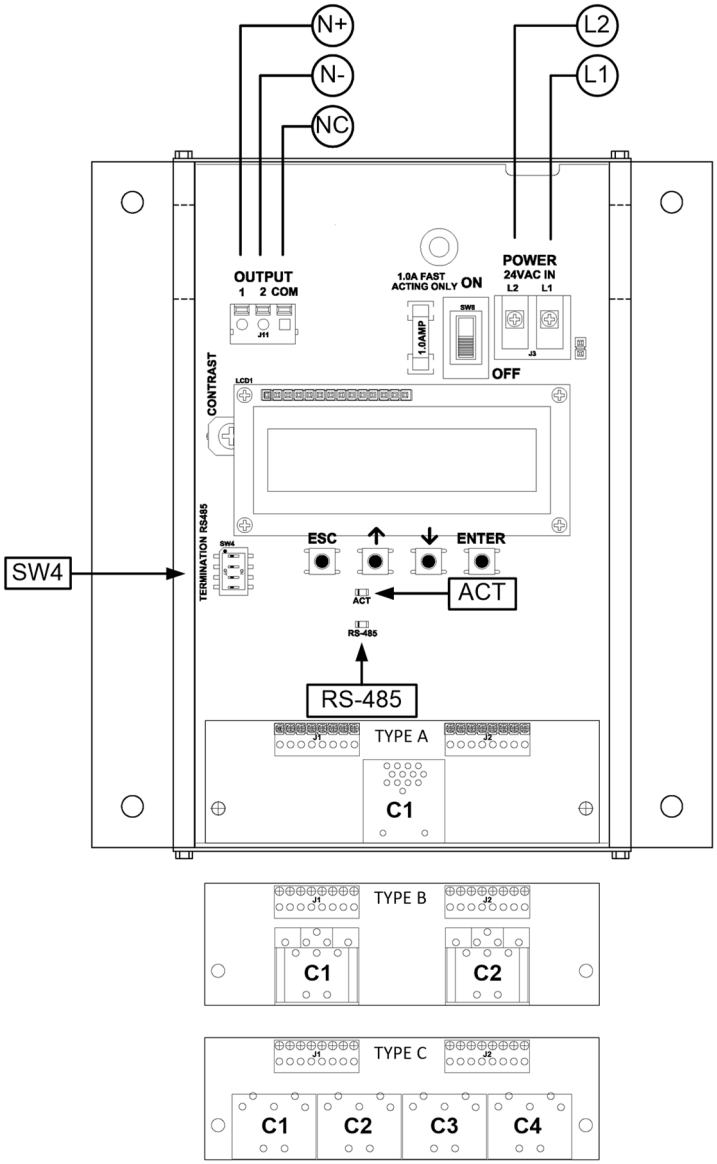

TRANSMITTER CONNECTIONS

Power		RS-485 (isolated)			Connector Type B	
L1	L2	N+	N-	NC	C1	C2
24 VAC (hot)	24 VAC (neutral)	Network +	Network -	Network Common	Bleed Sensor	Not Used

INSTRUCTIONS TO INSTALLER:

1. Mount the transmitter in a location where the bleed sensor cable can reach the receptacle of the transmitter. Provide a weatherproof enclosure (by others) and mount away from direct sunlight when outdoor mounting is required.
2. Connect the bleed sensor cable to connector C1 of the transmitter. Connector C2 is not used in this configuration

ⓘ *Cables have an FEP plenum rated jacket that are UV tolerant and suitable for operation over the entire operating temperature range of the device.*

⚠ *Sensor probe plugs are keyed and NOT twist-lock. Align the key and push the plug onto the transmitter receptacle. Twisting may damage the connector pins.*

3. Select a 24 VAC transformer that provides 22.8 to 26.4 VAC during operation. Size the transformer for 8 V-A for each measurement location.

⚠ *Multiple transmitters wired to a single transformer must be wired "in-phase" (L1 to L1 and L2 to L2).*

4. If the RS-485 connection is required continue to step 5, otherwise skip to step 7.
5. Connect to an RS-485 network (BACnet MS/TP or Modbus RTU), if required, using a 3-conductor network cable meeting the corresponding BACnet or Modbus standards. Ensure that all three connections, N+, N- and NC are connected.

⚠ *If a 2-conductor network cable or other non-conforming cable is used, network speed, length and reliability may be compromised or network failure may occur.*

6. If the transmitter is the first device on the network run, configure SW4 for "failsafe-bias". If the transmitter is the last device on the network run, configure SW4 for "end-of-line". Otherwise, configure SW4 for no termination (default).

SW4 - RS-485 TERMINATION DIP SWITCH POSITIONS

1	2	3	4	TERMINATION
OFF	OFF	OFF	OFF	No termination (default)
OFF	ON	ON	OFF	End of Line
ON	OFF	OFF	ON	Fail-Safe Bias

7. Refer to the *HTN104-B Startup Guide* prior to moving the power switch to the "ON" position.

EB-FlowII EF-A2000-B WIRING GUIDE

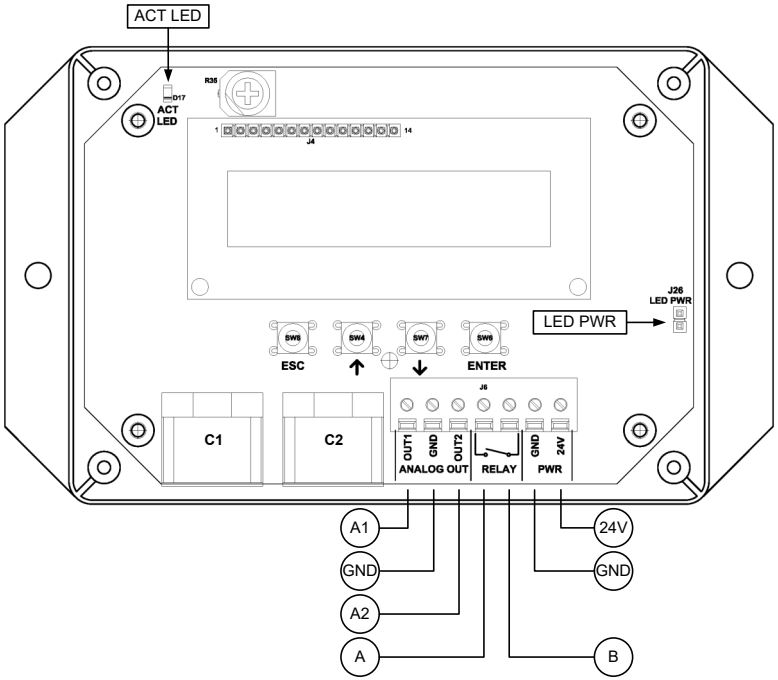

TRANSMITTER CONNECTIONS

Power		Analog Out (non-isolated)			Contact Closure		Connector	
24V	GND	A1	A2	GND	A	B	C1	C2
24 VAC (hot)	24 VAC (neutral)	Airflow (or Pressure) +	Temperature or Alarm +	Signal Common	OUT	IN	Bleed Sensor	Not Used

INSTRUCTIONS TO INSTALLER:

1. Mount the transmitter in a location where the bleed sensor cable can reach the receptacles of the transmitter. Provide a weatherproof enclosure (by others) and mount away from direct sunlight when outdoor mounting is required.
2. Connect the bleed sensor cable to connector C1 of the transmitter. Connector C2 is not used in this configuration.

ⓘ *Cables have an FEP plenum rated jacket that are UV tolerant and suitable for operation over the entire operating temperature range of the device.*

⚠ *Sensor probe plugs are keyed and NOT twist-lock. Align the key and push the plug onto the transmitter receptacle. Twisting may damage the connector pins.*

3. Select a 24 VAC transformer that provides 22.8 to 26.4 VAC during operation. Size the transformer for 8.5 V-A for each measurement location.

⚠ *The labeling "24V" is equivalent to "L1" and "GND" is equivalent to "L2" in many AC wiring diagrams. Do not connect "GND" to earth ground.*

⚠ *Most B.A.S. systems require devices with a "floating" signal common. Do not connect the secondary output of the power transformer to earth ground. Failure to follow this requirement will result in ground loops and may cause damage to the transmitter or host B.A.S.*

⚠ *Multiple transmitters wired to a single transformer must be wired "in-phase" (24V to 24V and GND to GND).*

4. *EB-FLowII* transmitters do not have a power switch. "Live" wiring to the power terminals is not recommended. Do not energize the transformer until power and all signal connections have been made to the transmitter.

⚠ *"Live" wiring may damage the transmitter and void warranty. Do not energize the transformer until power and all signal connections have been made to the transmitter.*

5. If analog output signals are used, continue to step 6, otherwise skip to step 7.
6. Connect each analog output signal required to the host B.A.S. using shielded twisted-pair wire. Properly terminate the shield (typically at the B.A.S.).

⚠ *If twisted pair wire and/or shielded cable is not used, extraneous electrical noise can be picked up between the transmitter and host control panel.*

7. If the contact closure relay is used continue to step 8, otherwise skip to step 11.
8. If the contact closure relay is used to energize an external alarm device, such as a relay, continue to step 9. If the contact closure relay is used to drive an LED, skip to step 10.
9. Connect the "hot" wire of an external alarm device in series with relay terminals A and B. The contact closure relay is normally open (N.O.) but can be setup for normally closed (N.C.) operation. Refer to the *Operations and Maintenance* Manual for more information. Skip to step 11.

⚠ *The alarm device must not exceed 3 amps @ 24 VAC or 30 VDC.*

10. Connect the positive (anode) side of the LED to relay output A and the negative (cathode) side to ground (PCB GND terminal preferred). Place the shunt jumper across the LED PWR posts (J26).
11. Refer to the *EF-A2000-B Startup Guide* prior to energizing power to the transformer.

EB-FlowII EF-N2000-B WIRING GUIDE

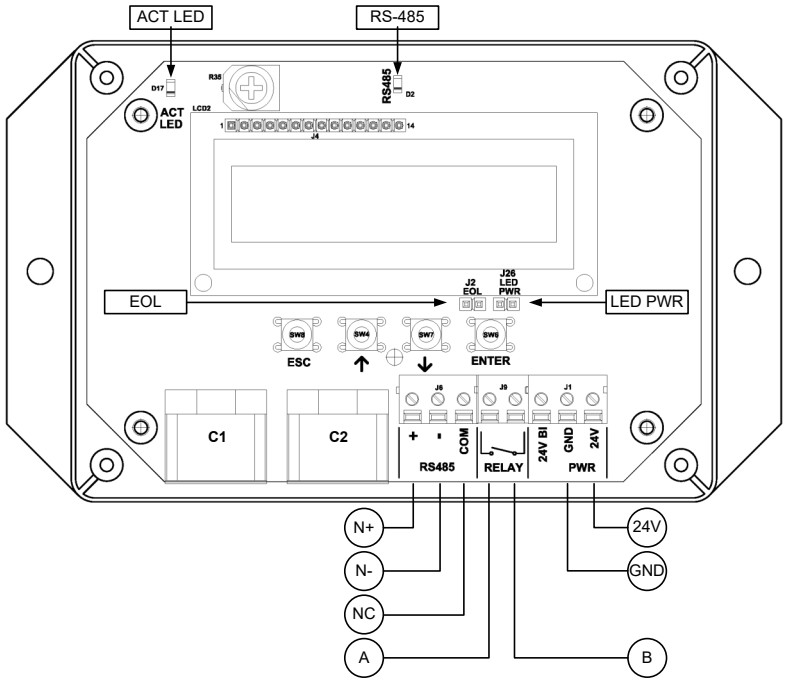

TRANSMITTER CONNECTIONS

Power		RS-485 (non-isolated)			Contact Closure		Connector	
24V	GND	N+	N-	NC	A	B	C1	C2
24 VAC (hot)	24 VAC (neutral)	Network +	Network -	Network Common	OUT	IN	Bleed Sensor	Not Used

INSTRUCTIONS TO INSTALLER:

1. Mount the transmitter in a location where the bleed sensor cable can reach the receptacles of the transmitter. Provide a weatherproof enclosure (by others) and mount away from direct sunlight when outdoor mounting is required.
2. Connect the bleed sensor cable to connector C1 of the transmitter. Connector C2 is not used in this configuration.

ⓘ *Cables have an FEP plenum rated jacket that are UV tolerant and suitable for operation over the entire operating temperature range of the device.*

⚠ *Sensor probe plugs are keyed and NOT twist-lock. Align the key and push the plug onto the transmitter receptacle. Twisting may damage the connector pins.*

3. Select a 24 VAC transformer that provides 22.8 to 26.4 VAC during operation. Size the transformer for 8.5 V-A for each measurement location.

⚠ *The labeling "24V" is equivalent to "L1" and "GND" is equivalent to "L2" in many AC wiring diagrams. Do not connect "GND" to earth ground.*

⚠ *Most B.A.S. systems require devices with an isolated RS-485 network. Do not connect the secondary output of the power transformer to earth ground.*

⚠ *Multiple transmitters wired to a single transformer must be wired "in-phase" (24V to 24V and GND to GND).*

4. *EB-FLowII* transmitters do not have a power switch. "Live" wiring to the power terminals is not recommended. Do not energize the transformer until power and all signal connections have been made to the transmitter.

⚠ *"Live" wiring may damage the transmitter and void warranty. Do not energize the transformer until power and all signal connections have been made to the transmitter.*

5. If the RS-485 connection is required continue to step 6, otherwise skip to step 8.
6. Connect to an RS-485 network (BACnet MS/TP or Modbus RTU), if required, using a 3-conductor network cable meeting the corresponding BACnet or Modbus standards. Ensure that all three connections, N+, N- and NC are connected.

⚠ *If a 2-conductor network cable or other non-conforming cable is used, network speed, length and reliability may be compromised or network failure may occur.*

7. If the transmitter is the first or last device on the network run, place the shunt jumper across the EOL posts (J2).
8. If the contact closure relay is used continue to step 9, otherwise skip to step 12.
9. If the contact closure relay is used to energize an external alarm device, such as a relay, continue to step 10. If the contact closure relay is used to drive an LED, skip to step 11.
10. Connect the "hot" wire of an external alarm device in series with relay terminals A and B. The contact closure relay is normally open (N.O.) but can be setup for normally closed (N.C.) operation. Refer to the *Operations and Maintenance* Manual for more information. Skip to step 12.

⚠ *The alarm device must not exceed 3 amps @ 24 VAC or 30 VDC.*

11. Connect the positive (anode) side of the LED to relay output A and the negative (cathode) side to ground (PCB GND terminal preferred). Place the shunt jumper across the LED PWR posts (J26).
12. Refer to the *EF-N2000-B Startup Guide* prior to energizing power to the transformer.

Appendix E

Startup Guides

Advantage IV (A4) GTA116e-P STARTUP GUIDE

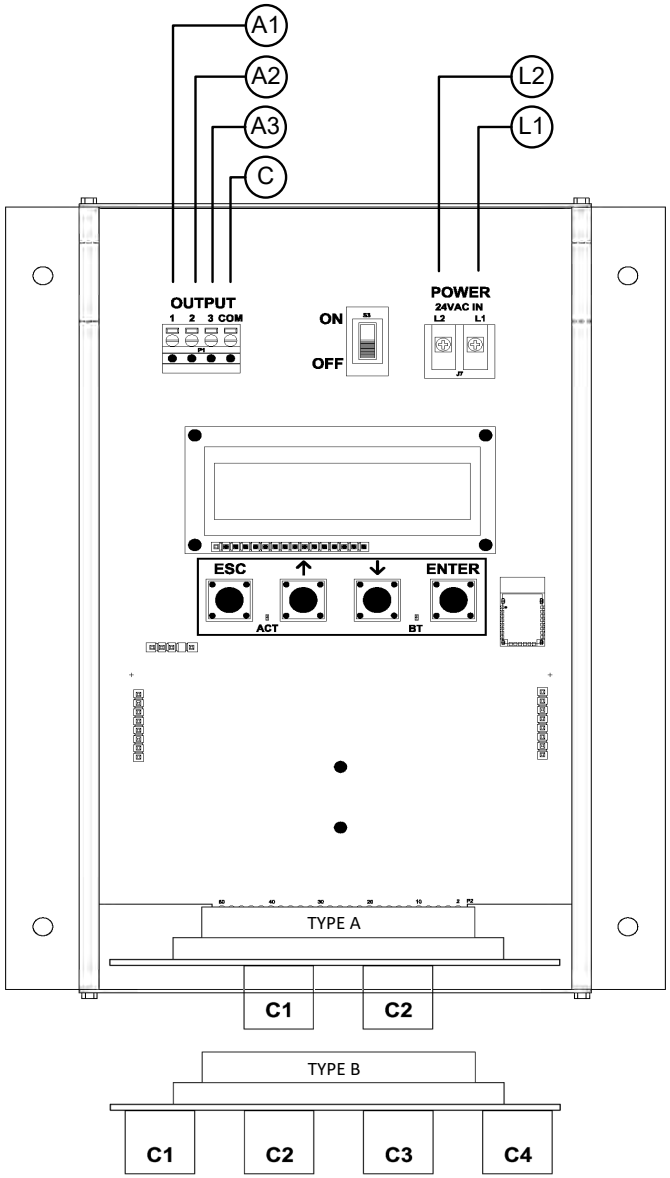

GTA116e-P Parameters - Factory Defaults and Optional Settings/Ranges

Description	Parameter	Default	Optional Settings/Ranges	Units
System of Units	SYS	I-P (US customary)	SI (metric)	
Airflow Calculation Method	AIRFLOW	ACT (actual)	STD (standard mass flow)	
Altitude (for actual flow correction)	ALT	0	AUTO, 0 to 20000 [0 to 6000]	ft [m]
Low Limit Airflow Cutoff	LLIMIT	0 FPM	0 to 500 FPM [0.0 to 2.5 m/s]	
Area	AREA	*{Order Area}*	0.00 to 9999.99 [0.000 to 999.999]	sq ft [sq m]
Humidity Sensor Config. (/H opt.)	H CONFIG	RH (relative humidity)	ENTH (enthalpy), DPT (dew point)	
Auto Pb Correct Psych. Values	Pb CORR	ON (onboard sensor)	OFF	
AO1, AO2 and AO3 Type	AOUT	4-20mA	0-10V, 0-5 V	
AO1 Assignment	AO1 ASGN	AF (Airflow)	None	
AO1 Unit of Measure	AO1 UM	FPM [m/s]	CFM [L/s]	
AO1 Minimum Scale Reading	AO1 MS	0	None	FPM [m/s]
AO1 Full Scale Reading	AO1 FS	5000 [25.0]	100 to 15000 [0.5 to 75.0]	FPM [m/s]
AO2 Assignment	AO2 ASGN	TEMP (Temperature)	ALRM (Alarm) or TRBL (System Trouble)	
AO2 Unit of Measure	AO2 UM	F [C]	None	°F [°C]
AO2 Minimum Scale Reading	AO2 MS	-20 [-30]	-50 to 160 [-50 to 70]	°F [°C]
AO2 Full Scale Reading	AO2 FS	160 [70]	-50 to 160 [-50 to 70]	°F [°C]
H CONFIG=RH (default)				
AO3 Assignment	AO3 ASGN	RH	None	
AO3 Unit of Measure	AO3 UM	%RH	None	
AO3 Minimum Scale Reading	AO3 MS	0	0 to 100	% RH
AO3 Full Scale Reading	AO3 FS	100	0 to 100	% RH
H CONFIG=ENTH				
AO3 Assignment	AO3 ASGN	ENTH	None	
AO3 Unit of Measure	AO3 UM	Btu/lb [kJ/kg]	None	
AO3 Minimum Scale Reading	AO3 MS	0	-20 to 400 [-40 to 800]	Btu/lb [kJ/kg]
AO3 Full Scale Reading	AO3 FS	200 [400]	-20 to 400 [-40 to 800]	Btu/lb [kJ/kg]
H CONFIG=DPT				
AO3 Assignment	AO3 ASGN	DPT	None	
AO3 Unit of Measure	AO3 UM	F DPT [C DPT]	None	
AO3 Minimum Scale Reading	AO3 MS	0	-50 to 160 [-50 to 70]	°F [°C]
AO3 Full Scale Reading	AO3 FS	100 [50]	-50 to 160 [-50 to 70]	°F [°C]

Refer to the O&M Manual for more information and/or additional parameter defaults, settings and ranges.

STARTUP INSTRUCTIONS:

1. Verify that the sensor probes are located where they meet EBTRON published installation guides.
2. Verify that the probes are properly spaced with the airflow arrows pointing in the direction of airflow.

⚠ *Improperly installed probes will compromise the installed accuracy of the device and degrade system performance.*

3. Verify that the transmitter is installed and wired in accordance with the *GTA116e-P Wiring Guide* provided with the transmitter and power is provided to the transmitter.
4. Make sure the ductwork is clean and free of debris prior to fan startup.
5. Move the power switch to the "ON" position. Power-up faults, if detected, are displayed on the LCD. If any power up faults are detected, resolve all conflicts or contact EBTRON customer service at 1-800-232-8766 before proceeding..

⚠ *If extension cables have been added, the extension cable length must be entered into the transmitter. Refer to the Operations and Maintenance Manual for more information.*

6. The transmitter is fully functional as a factory calibrated airflow and temperature measurement device in I-P units (ft, FPM, CFM °F). Airflow (CFM) and temperature (°F) are displayed on the LCD. It the transmitter is provided with the /H humidity sensor option, relative humidity (%RH) is also displayed.
7. If the /H humidity sensor option is provided, relative humidity (%RH) is displayed on the LCD. Enthalpy or dew point can also be displayed on the LCD by changing the H CONFIG parameter to ENTH (enthalpy) or DPT (dew point). Press the ↑↓ arrow buttons simultaneously to enter the MAIN MENU. The SETTINGS menu is displayed. Press the ENT button to select the top of the SETTINGS submenu category. Press the ↓ button until the GENERAL submenu category is visible. Press the ENT button to enter the GENERAL submenu. Press the ↓ button until the H CONFIG parameter is visible. Press the ENT button and set the H CONFIG parameter to ENTH (enthalpy) or DPT (dew point) using the the ↑↓ buttons. Press the ENT button to save the selection. Press the ESC button twice to return to normal operation.

ⓘ *The H CONFIG setting specifies the psychrometric property assigned to analog output AO3.*

ⓘ *If SI units are required, refer to the the Operations and Maintenance Manual.*

ⓘ *The factory default airflow output is set to actual airflow (FPM, CFM). If standard (mass) airflow (SFPM, SCFM) is required, refer to the Operations and Maintenance Manual.*

8. Verify that the area on the hang-tag matches the actual area of the duct or opening where the probes are located (less any internal insulation). If the area is different, modify the area parameter stored in the transmitter and use the correct area for any external conversion calculations from FPM to CFM.

⚠ *Failure to use the correct area <u>will</u> result in volumetric airflow (CFM) measurement error and degrade system performance. If the area parameter must be changed, refer to the Operations and Maintenance Manual.*

9. If analog output signals are used continue to step 10, otherwise skip to step 15.
10. The output signal type and range (4-20 mA, 0-5 VDC or 0-10VDC) of AO1, AO2 and AO3 is determined by the AOUT parameter. The transmitter is factory set to 4-20mA.

⚠ *The 4-20mA is "4-wire type" and not loop powered. Do not apply any excitation voltage to the output of the transmitter.*

11. Verify that the transmitter is configured to match the analog input requirements of the host controller. Press the ESC and ↑ buttons simultaneously to display the transmitter setting for the AOUT parameter. If the AOUT parameter is not correct, press the ENT button and use the ↑ and ↓ buttons to set AOUT. Press the ENT button to execute and display the change. Press the ESC button to return to normal operation.
12. The analog output signal for airflow (AO1) is linear. The minimum scale reading (0% output) of the airflow signal is fixed at 0 and the full scale reading (100% output) is factory set to 5,000 FPM.

Multiply the default full scale velocity (FPM)by the correct area of the measurement location to determine the full-scale or span (CFM) for the B.A.S. to avoid field configuration. EBTRON airflow measurement device accuracy is percent-of-reading. Changing the full scale reading does not affect measurement accuracy.

ⓘ *If custom airflow scaling or unit of measure are required, refer to the Operations and Maintenance Manual.*

13. The analog output signal for temperature (AO2) is linear. The minimum scale reading (0% output) is set to -20 ºF and full scale reading (100% output) is set to 160 ºF.

ⓘ *If custom temperature scaling is required, refer to the Operations and Maintenance Manual.*

ⓘ *AO2 can be configured for a high/low airflow alarm or system status alarm. Refer to the Operations and Maintenance Manual for more information.*

14. The analog output signal (AO3) for the psychrometric property specified is linear. The minimum scale reading (0% output) and full scale reading (100% output) is based on the psychrometric specified by H CONFIG. The factory default ranges for each psychrometric property output are as follows:
    - Relative humidity (H CONFIG = RH): 0 to 100%
    - Enthalpy (H CONFIG = ENTH): 0 to 200 Btu/lb
    - Dew point (H CONFIG = DPT): 0 to 100 ºF

ⓘ *If custom psychrometric property scaling is required, refer to the Operations and Maintenance Manual.*

15. Startup is complete! If additional customization is desired, consult the *Operation and Maintenance Manual*.

VERIFICATION

Many installations require third-party airflow verification. If the airflow measuring device is within the measurement uncertainty of the verification technique, EBTRON strongly recommends that no field adjustment correction is made. EBTRON airflow measurement devices are factory calibrated to NIST traceable standards. Field adjustment is not recommended when installed in accordance to published guidelines.

If field adjustment is required, refer to the *Operation and Maintenance Manual*.

ⓘ *If minimum placement guidelines cannot be achieved, installed accuracy may be compromised. Transmitters can be field adjusted to match a third-party measurement. Adjusted field measurements typically result in comparative readings within ±3% of the third-party measurement. Be advised that the third-party measurement may have uncertainties greater than or equal to ±10% and should only be used to adjust the airflow measurement device if the probes do not meet minimum placement requirements or the discrepancy is greater than the uncertainty of the third-party source.*

FOR MORE INFORMATION ….

<u>Operations and Maintenance Manual</u>.

The *Operations and Maintenance Manual* is a comprehensive reference document that contains information on installation, startup, custom configuration, built-in tools, diagnostics, troubleshooting and maintenance.

NEED MORE HELP?

<u>EBTRON Customer Service</u>

For toll-free factory support call 1-800-2EBTRON (1-800-232-8766), Monday through Thursday 8:00 AM to 4:30 PM and Friday 8:00 AM to 2:00 PM eastern time.

<u>Your Local EBTRON Representative</u>

Visit EBTRON.com for the name and contact information of your local representative.

Advantage IV (A4) GTB116-P STARTUP GUIDE

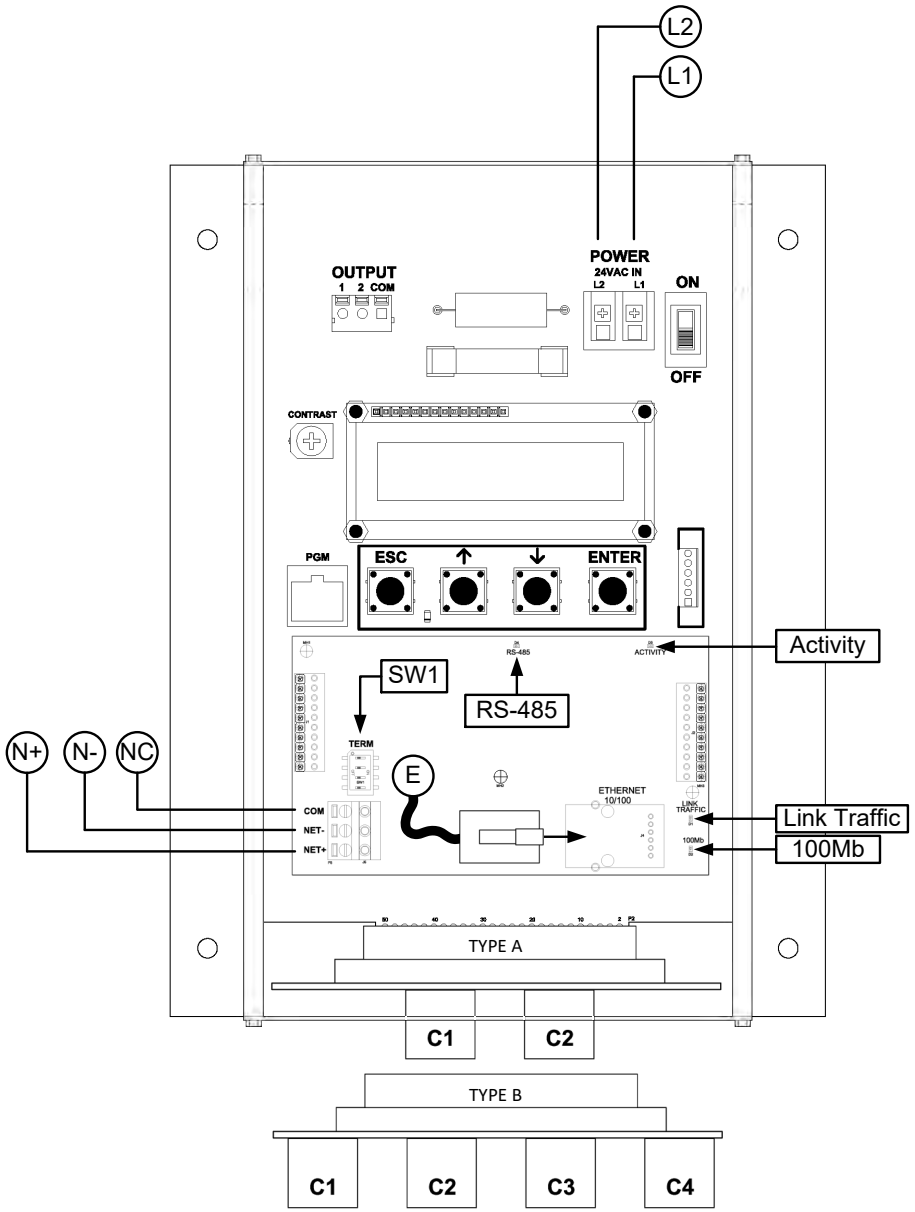

GTB116-P Parameters - Factory Defaults and Optional Settings/Ranges

Description	Parameter	Default	Optional Settings/Ranges	Units
System of Units	SYS	I-P (US customary)	SI (metric)	
Airflow Calculation Method	AIRFLOW	ACT (actual)	STD (standard mass flow)	
Altitude (for actual flow correction)	ALT	0	0 to 20000 [0 to 6000]	ft [m]
Low Limit Airflow Cutoff	LLIMIT	0 FPM	0 to 500 FPM [0.0 to 2.5 m/s]	
Area	AREA	*{Order Area}*	0.00 to 9999.99 [0.000 to 999.999]	sq ft [sq m]
RS-485 Network	BACnet MS/TP or Modbus RTU (requires configuration)			
Ethernet Network	Simultaneous BACnet IP or BACnet Ethernet, Modbus TCP, and TCP/IP (requires configuration)			

Refer to the O&M Manual for more information and/or additional parameter defaults, settings and ranges.

STARTUP INSTRUCTIONS:

1. Verify that the sensor probes are located where they meet EBTRON published installation guides.
2. Verify that the probes are properly spaced with the airflow arrows pointing in the direction of airflow.

⚠ *Improperly installed probes will compromise the installed accuracy of the device and degrade system performance.*

3. Verify that the transmitter is installed and wired in accordance with the *GTB116-P Wiring Guide* provided with the transmitter and power is provided to the transmitter.
4. Make sure the ductwork is clean and free of debris prior to fan startup.
5. Move the power switch to the "ON" position. Power-up faults, if detected, are displayed on the LCD. If any power up faults are detected, resolve all conflicts or contact EBTRON customer service at 1-800-232-8766 before proceeding..

⚠ *If extension cables have been added, the extension cable length must be entered into the transmitter. Refer to the Operations and Maintenance Manual for more information.*

6. The transmitter is fully functional as a factory calibrated airflow and temperature measurement device in I-P units (ft, FPM, CFM °F). Airflow (CFM) and temperature (°F) are displayed on the LCD.

ⓘ *If SI units are required, refer to the the Operations and Maintenance Manual.*

ⓘ *The factory default airflow output is set to actual airflow (FPM, CFM). If standard (mass) airflow (SFPM, SCFM) is required, refer to the Operations and Maintenance Manual.*

7. Verify that the area on the hang-tag matches the actual area of the duct or opening where the probes are located (less any internal insulation). If the area is different, modify the area parameter stored in the transmitter and use the correct area for any external conversion calculations from FPM to CFM.

⚠ *Failure to use the correct area will result in volumetric airflow (CFM) measurement error and degrade system performance. If the area parameter must be changed, refer to the Operations and Maintenance Manual.*

8. If the RS-485 network connection is required continue to step 9, otherwise skip to step 11.
9. Press the ↑↓ arrow buttons simultaneously to enter the MAIN MENU. The SETTINGS menu is displayed. Press the ENT button to select the top of the SETTINGS submenu category. Press the ↓ button until the RS-485 submenu category is visible. Press the ENT button to enter the RS-485 submenu. The NET OUT parameter is visible. Press the ENT button and set the NET OUT parameter to BACNET (BACnet MS/TP) or MODBUS (Modbus RTU). Press the ENT button to save the selection. Use the ↓ arrow button and continue through the RS-485 submenu to configure the remaining network parameters. Enable network communications by setting the RS485 COM parameter to "ON" and press the ENT button. Press the ESC button twice to return to normal operation.
10. Refer to the *Operations and Maintenance Manual* for detailed information on the BACnet Objects and

Modbus Registers supported by this device.

11. If the Ethernet network connection is required continue to step 12, otherwise skip to step 14.
12. Press the ↑↓ arrow buttons simultaneously to enter the MAIN MENU. The SETTINGS menu is displayed. Press the ENT button to select the top of the SETTINGS submenu category. Press the ↓ button until the ETHERNET submenu category is visible. Press the ENT button again to enter the ETHERNET submenu. Configure the network parameters and press the ESC button twice to return to normal operation.

ⓘ *GTB116 transmitters support simultaneous communication via BACnet IP or BACnet Ethernet, Modbus TCP, and TCP/IP.*

13. Refer to the *Operations and Maintenance Manual* for detailed information on the BACnet Objects and Modbus Registers supported by this device.
14. Startup is complete! If additional customization is desired, consult the *Operation and Maintenance Manual*.

VERIFICATION

Many installations require third-party airflow verification. If the airflow measuring device is within the measurement uncertainty of the verification technique, EBTRON strongly recommends that no field adjustment correction is made. EBTRON airflow measurement devices are factory calibrated to NIST traceable standards. Field adjustment is not recommended when installed in accordance to published guidelines.

If field adjustment is required, refer to the *Operation and Maintenance Manual*.

ⓘ *If minimum placement guidelines cannot be achieved, installed accuracy may be compromised. Transmitters can be field adjusted to match a third-party measurement. Adjusted field measurements typically result in comparative readings within ±3% of the third-party measurement. Be advised that the third-party measurement may have uncertainties greater than or equal to ±10% and should only be used to adjust the airflow measurement device if the probes do not meet minimum placement requirements or the discrepancy is greater than the uncertainty of the third-party source.*

FOR MORE INFORMATION ….

Operations and Maintenance Manual.

The *Operations and Maintenance Manual* is a comprehensive reference document that contains information on installation, startup, custom configuration, built-in tools, diagnostics, troubleshooting and maintenance.

NEED MORE HELP?

EBTRON Customer Service

For toll-free factory support call 1-800-2EBTRON (1-800-232-8766), Monday through Thursday 8:00 AM to 4:30 PM and Friday 8:00 AM to 2:00 PM eastern time.

Your Local EBTRON Representative

Visit EBTRON.com for the name and contact information of your local representative.

Advantage IV (A4) GTC116-P STARTUP GUIDE

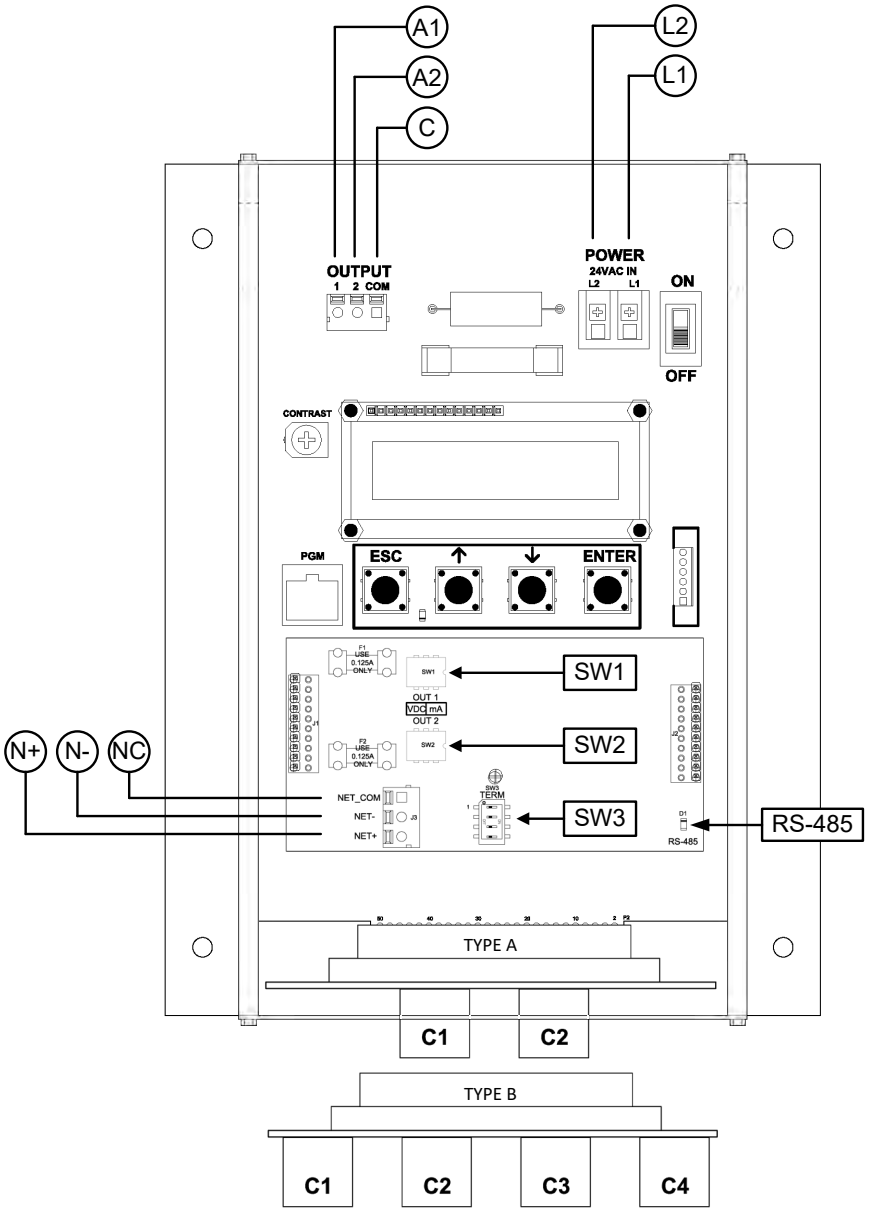

GTC116-P Parameters - Factory Defaults and Optional Settings/Ranges

Description	Parameter	Default	Optional Settings/Ranges	Units
System of Units	SYS	I-P (US customary)	SI (metric)	
Airflow Calculation Method	AIRFLOW	ACT (actual)	STD (standard mass flow)	
Altitude (for actual flow correction)	ALT	0	0 to 20000 [0 to 6000]	ft [m]
Low Limit Airflow Cutoff	LLIMIT	0 FPM	0 to 500 FPM [0.0 to 2.5 m/s]	
Area	AREA	*{Order Area}*	0.00 to 9999.99 [0.000 to 999.999]	sq ft [sq m]
AO1 Type	AOUT1	4-20mA	0-10V, 0-5 V	
AO2 Type	AOUT2	4-20mA	0-10V, 0-5 V	
AO1 Assignment	AO1 ASGN	AF (Airflow)	None	
AO1 Unit of Measure	AO1 UM	FPM [m/s]	CFM [L/s]	
AO1 Minimum Scale Reading	AO1 MS	0	None	FPM [m/s]
AO1 Full Scale Reading	AO1 FS	5000 [25.0]	100 to 15000 [0.5 to 75.0]	FPM [m/s]
AO2 Assignment	AO2 ASGN	TEMP (Temperature)	ALRM (Alarm) or TRBL (System Trouble)	
AO2 Unit of Measure	AO2 UM	F [C]	None	°F [°C]
AO2 Minimum Scale Reading	AO2 MS	-20 [-30]	-50 to 160 [-50 to 70]	°F [°C]
AO2 Full Scale Reading	AO2 FS	160 [70]	-50 to 160 [-50 to 70]	°F [°C]
RS-485 Network	BACnet MS/TP or Modbus RTU (requires configuration)			

Refer to the O&M Manual for more information and/or additional parameter defaults, settings and ranges.

STARTUP INSTRUCTIONS:

1. Verify that the sensor probes are located where they meet EBTRON published installation guides.
2. Verify that the probes are properly spaced with the airflow arrows pointing in the direction of airflow.

⚠ *Improperly installed probes will compromise the installed accuracy of the device and degrade system performance.*

3. Verify that the transmitter is installed and wired in accordance with the *GTC116-P Wiring Guide* provided with the transmitter and power is provided to the transmitter.
4. Make sure the ductwork is clean and free of debris prior to fan startup.
5. Move the power switch to the "ON" position. Power-up faults, if detected, are displayed on the LCD. If any power up faults are detected, resolve all conflicts or contact EBTRON customer service at 1-800-232-8766 before proceeding..

⚠ *If extension cables have been added, the extension cable length must be entered into the transmitter. Refer to the Operations and Maintenance Manual for more information.*

6. The transmitter is fully functional as a factory calibrated airflow and temperature measurement device in I-P units (ft, FPM, CFM °F). Airflow (CFM) and temperature (°F) are displayed on the LCD.

ⓘ *If SI units are required, refer to the the Operations and Maintenance Manual.*

ⓘ *The factory default airflow output is set to actual airflow (FPM, CFM). If standard (mass) airflow (SFPM, SCFM) is required, refer to the Operations and Maintenance Manual.*

7. Verify that the area on the hang-tag matches the actual area of the duct or opening where the probes are located (less any internal insulation). If the area is different, modify the area parameter stored in the transmitter and use the correct area for any external conversion calculations from FPM to CFM.

⚠ *Failure to use the correct area will result in volumetric airflow (CFM) measurement error and degrade system performance.. If the area parameter must be changed, refer to the Operations and Maintenance Manual.*

8. If analog output signals are used continue to step 9, otherwise skip to step 13.

9. Verify that the transmitter is configured to match the analog input requirements of the host controller. The output signal type (mA or VDC) of AO1 and AO2 are determined by switches SW1 (AO1) and SW2 (AO2) on the output card. The transmitter is factory set to 4-20mA. Verify the switches for the proper output signal type.

⚠ *The 4-20mA is "4-wire type" and not loop powered. Do not apply any excitation voltage to the output of the transmitter.*

10. Press the ESC and ↑ buttons simultaneously to display the transmitter setting for the AOUT1 (AO1) parameter. Use the ↓ button to view the setting for the AOUT (AO2) parameter. If the output signal type (mA or VDC) is not correct, position switches SW1 and/or SW2 on the option card board for the appropriate signal type. If VDC is selected and a 0-5V output is required in lieu of 0-10V, use the ↑↓ buttons until AOUT1 is visible. Press the ENT button and use the ↑↓ buttons to select 0-5V. Press the ENT button to execute and display the change. Do the same for AOUT2, if required. Press the ESC button to return to normal operation..
11. The analog output signal for airflow (AO1) is linear. The minimum scale reading (0% output) of the airflow signal is fixed at 0 and the full scale reading (100% output) is factory set to 5,000 FPM.

ⓘ *If the transmitter is connected to a -U, -T or - B probe type, the full scale is factory set to 3,000 FPM. If the transmitter is connected to a -B probe type the minimum scale is factory set to -3,000 FPM (bi-directional output).*

Multiply the default full scale velocity (FPM)by the correct area of the measurement location to determine the full-scale or span (CFM) for the B.A.S. to avoid field configuration. EBTRON airflow measurement device accuracy is percent-of-reading. Changing the full scale reading does not affect measurement accuracy.

ⓘ *If custom airflow scaling or unit of measure are required, refer to the Operations and Maintenance Manual.*

12. The analog output signal for temperature (AO2) is linear. The minimum scale reading (0% output) is set to –20 ºF and full scale reading (100% output) is set to 160 ºF.

ⓘ *If custom temperature scaling is required, refer to the Operations and Maintenance Manual.*

ⓘ *AO2 can be configured for a high/low airflow alarm or system status alarm. Refer to the Operations and Maintenance Manual for more information.*

13. If the RS-485 network connection is required continue to step 14, otherwise skip to step 16.
14. Press the ↑↓ arrow buttons simultaneously to enter the MAIN MENU. The SETTINGS menu is displayed. Press the ENT button to select the top of the SETTINGS submenu category. Press the ↓ button until the RS-485 submenu category is visible. Press the ENT button to enter the RS-485 submenu. The NET OUT parameter is visible. Press the ENT button and set the NET OUT parameter to BACNET (BACnet MS/TP) or MODBUS (Modbus RTU). Press the ENT button to save the selection. Use the ↓ arrow button and continue through the RS-485 submenu to configure the remaining network parameters. Enable network communications by setting the RS485 COM parameter to "ON" and press the ENT button. Press the ESC button twice to return to normal operation.
15. Refer to the *A4 Operations and Maintenance Manual* for detailed information on the BACnet Objects and Modbus Registers supported by this device.
16. Startup is complete! If additional customization is desired, consult the *Operation and Maintenance Manual*.

VERIFICATION

Many installations require third-party airflow verification. If the airflow measuring device is within the measurement uncertainty of the verification technique, EBTRON strongly recommends that no field adjustment correction is made. EBTRON airflow measurement devices are factory calibrated to NIST traceable standards. Field adjustment is not recommended when installed in accordance to published guidelines.

If field adjustment is required, refer to the *Operation and Maintenance Manual*.

ⓘ *If minimum placement guidelines cannot be achieved, installed accuracy may be compromised. Transmitters can be field adjusted to match a third-party measurement. Adjusted field measurements typically result in comparative readings within ±3% of the third-party measurement. Be advised that the third-party measurement may have uncertainties greater than or equal to ±10% and should only be used to adjust the airflow measurement device if the probes do not meet minimum placement requirements or the discrepancy is greater than the uncertainty of the third-party source.*

FOR MORE INFORMATION ….

Operations and Maintenance Manual.

The *Operations and Maintenance Manual* is a comprehensive reference document that contains information on installation, startup, custom configuration, built-in tools, diagnostics, troubleshooting and maintenance.

NEED MORE HELP?

EBTRON Customer Service

For toll-free factory support call 1-800-2EBTRON (1-800-232-8766), Monday through Thursday 8:00 AM to 4:30 PM and Friday 8:00 AM to 2:00 PM eastern time.

Your Local EBTRON Representative

Visit EBTRON.com for the name and contact information of your local representative.

Advantage IV (A4) GTC116e-P STARTUP GUIDE

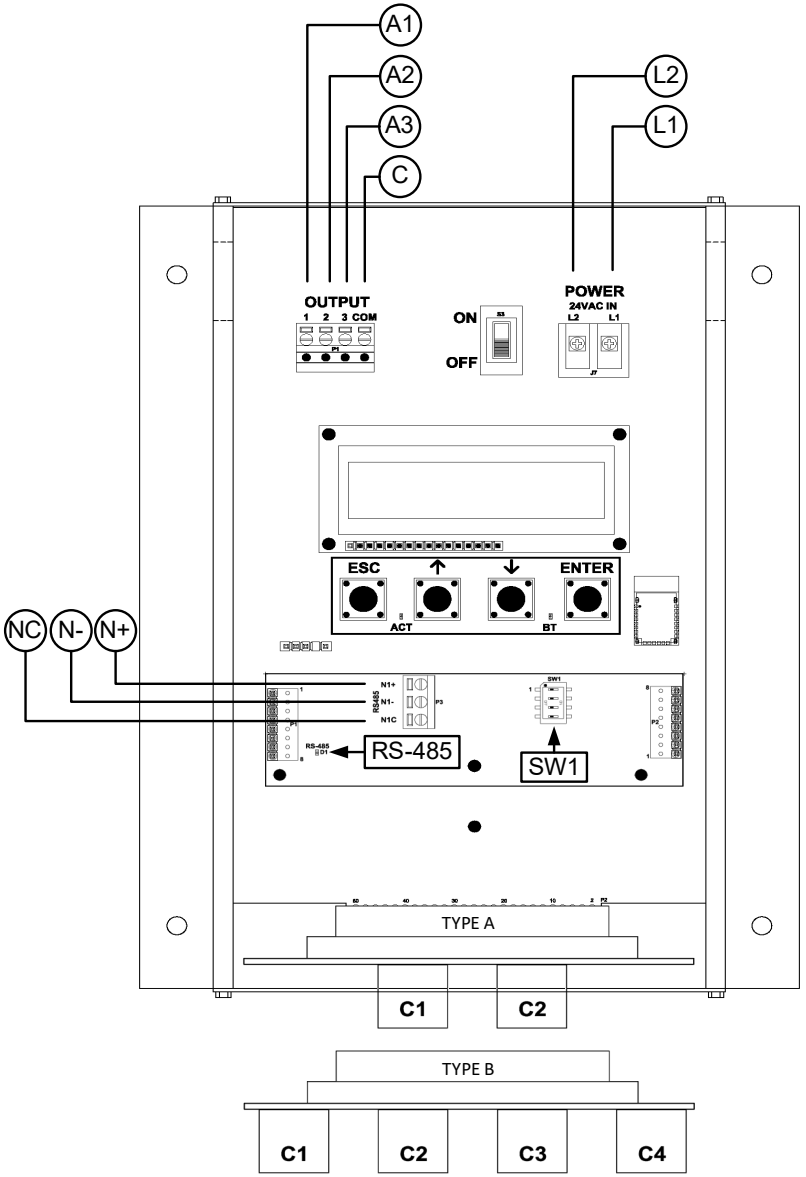

GTC116e-P Parameters - Factory Defaults and Optional Settings/Ranges

Description	Parameter	Default	Optional Settings/Ranges	Units
System of Units	SYS	I-P (US customary)	SI (metric)	
Airflow Calculation Method	AIRFLOW	ACT (actual)	STD (standard mass flow)	
Altitude (for actual flow correction)	ALT	0	AUTO, 0 to 20000 [0 to 6000]	ft [m]
Low Limit Airflow Cutoff	LLIMIT	0 FPM	0 to 500 FPM [0.0 to 2.5 m/s]	
Area	AREA	*{Order Area}*	0.00 to 9999.99 [0.000 to 999.999]	sq ft [sq m]
Humidity Sensor Config. (/H opt.)	H CONFIG	RH (relative humidity)	ENTH (enthalpy), DPT (dew point)	
Auto Pb Correct Psych. Values	Pb CORR	ON (onboard sensor)	OFF	
AO1, AO2 and AO3 Type	AOUT	4-20mA	0-10V, 0-5 V	
AO1 Assignment	AO1 ASGN	AF (Airflow)	None	
AO1 Unit of Measure	AO1 UM	FPM [m/s]	CFM [L/s]	
AO1 Minimum Scale Reading	AO1 MS	0	None	FPM [m/s]
AO1 Full Scale Reading	AO1 FS	5000 [25.0]	100 to 15000 [0.5 to 75.0]	FPM [m/s]
AO2 Assignment	AO2 ASGN	TEMP (Temperature)	ALRM (Alarm) or TRBL (System Trouble)	
AO2 Unit of Measure	AO2 UM	F [C]	None	°F [°C]
AO2 Minimum Scale Reading	AO2 MS	-20 [-30]	-50 to 160 [-50 to 70]	°F [°C]
AO2 Full Scale Reading	AO2 FS	160 [70]	-50 to 160 [-50 to 70]	°F [°C]
H CONFIG=RH (default)				
AO3 Assignment	AO3 ASGN	RH	None	
AO3 Unit of Measure	AO3 UM	% RH	None	
AO3 Minimum Scale Reading	AO3 MS	0	0 to 100	% RH
AO3 Full Scale Reading	AO3 FS	100	0 to 100	% RH
H CONFIG=ENTH				
AO3 Assignment	AO3 ASGN	ENTH	None	
AO3 Unit of Measure	AO3 UM	Btu/lb [kJ/kg]	None	
AO3 Minimum Scale Reading	AO3 MS	0	-20 to 400 [-40 to 800]	Btu/lb [kJ/kg]
AO3 Full Scale Reading	AO3 FS	200 [400]	-20 to 400 [-40 to 800]	Btu/lb [kJ/kg]
H CONFIG=DPT				
AO3 Assignment	AO3 ASGN	DPT	None	
AO3 Unit of Measure	AO3 UM	F DPT [C DPT]	None	
AO3 Minimum Scale Reading	AO3 MS	0	-50 to 160 [-50 to 70]	°F [°C]
AO3 Full Scale Reading	AO3 FS	100 [50]	-50 to 160 [-50 to 70]	°F [°C]
RS-485 Network	BACnet MS/TP or Modbus RTU (requires configuration)			

Refer to the O&M Manual for more information and/or additional parameter defaults, settings and ranges.

STARTUP INSTRUCTIONS:

1. Verify that the sensor probes are located where they meet EBTRON published installation guides.
2. Verify that the probes are properly spaced with the airflow arrows pointing in the direction of airflow.

⚠ *Improperly installed probes will compromise the installed accuracy of the device and degrade system performance.*

3. Verify that the transmitter is installed and wired in accordance with the *GTC116e-P Wiring Guide* provided with the transmitter and power is provided to the transmitter.
4. Make sure the ductwork is clean and free of debris prior to fan startup.
5. Move the power switch to the "ON" position. Power-up faults, if detected, are displayed on the LCD. If any power up faults are detected, resolve all conflicts or contact EBTRON customer service at 1-800-232-8766 before proceeding.

⚠ *If extension cables have been added, the extension cable length must be entered into the transmitter. Refer to the Operations and Maintenance Manual for more information.*

6. The transmitter is fully functional as a factory calibrated airflow and temperature measurement device in I-P units (ft, FPM, CFM °F). Airflow (CFM) and temperature (°F) are displayed on the LCD. If the transmitter is provided with the /H humidity sensor option, relative humidity (%RH) is also displayed.
7. If the /H humidity sensor option is provided, relative humidity (%RH) is displayed on the LCD. Enthalpy or dew point can also be displayed on the LCD by changing the H CONFIG parameter to ENTH (enthalpy) or DPT (dew point). Press the ↑↓ arrow buttons simultaneously to enter the MAIN MENU. The SETTINGS menu is displayed. Press the ENT button to select the top of the SETTINGS submenu category. Press the ↓ button until the GENERAL submenu category is visible. Press the ENT button to enter the GENERAL submenu. Press the ↓ button until the H CONFIG parameter is visible. Press the ENT button and set the H CONFIG parameter to ENTH (enthalpy) or DPT (dew point) using the ↑↓ buttons. Press the ENT button to save the selection. Press the ESC button twice to return to normal operation.

ⓘ *The H CONFIG setting specifies the psychrometric property assigned to analog output AO3.*

ⓘ *If SI units are required, refer to the Operations and Maintenance Manual.*

ⓘ *The factory default airflow output is set to actual airflow (FPM, CFM). If standard (mass) airflow (SFPM, SCFM) is required, refer to the Operations and Maintenance Manual.*

8. Verify that the area on the hang-tag matches the actual area of the duct or opening where the probes are located (less any internal insulation). If the area is different, modify the area parameter stored in the transmitter and use the correct area for any external conversion calculations from FPM to CFM.

⚠ *Failure to use the correct area <u>will</u> result in volumetric airflow (CFM) measurement error and degrade system performance.. If the area parameter must be changed, refer to the Operations and Maintenance Manual.*

9. If analog output signals are used continue to step 10, otherwise skip to step 15.
10. The output signal type and range (4-20 mA, 0-5 VDC or 0-10VDC) of AO1, AO2 and AO3 is determined by the AOUT parameter. The transmitter is factory set to 4-20mA.

⚠ *The 4-20mA is "4-wire type" and not loop powered. Do not apply any excitation voltage to the output of the transmitter.*

11. Verify that the transmitter is configured to match the analog input requirements of the host controller. Press the ESC and ↑ buttons simultaneously to display the transmitter setting for the AOUT parameter. If the AOUT parameter is not correct, press the ENT button and use the ↑ and ↓ buttons to set AOUT. Press the ENT button to execute and display the change. Press the ESC button to return to normal operation.
12. The analog output signal for airflow (AO1) is linear. The minimum scale reading (0% output) of the airflow signal is fixed at 0 and the full scale reading (100% output) is factory set to 5,000 FPM.

Multiply the default full scale velocity (FPM)by the correct area of the measurement location to determine the full-scale or span (CFM) for the B.A.S. to avoid field configuration. EBTRON airflow measurement device accuracy is percent-of-reading. Changing the full scale reading does not affect measurement accuracy.

ⓘ *If custom airflow scaling or unit of measure are required, refer to the Operations and Maintenance Manual.*

13. The analog output signal for temperature (AO2) is linear. The minimum scale reading (0% output) is set to -20 ºF and full scale reading (100% output) is set to 160 ºF.

ⓘ *If custom temperature scaling is required, refer to the Operations and Maintenance Manual.*

ⓘ *AO2 can be configured for a high/low airflow alarm or system status alarm. Refer to the Operations and Maintenance Manual for more information.*

14. The analog output signal (AO3) for the psychrometric property specified is linear. The minimum scale reading (0% output) and full scale reading (100% output) is based on the psychrometric specified by H CONFIG. The factory default ranges for each psychrometric property output are as follows:
    - Relative humidity (H CONFIG = RH): 0 to 100%
    - Enthalpy (H CONFIG = ENTH): 0 to 200 Btu/lb
    - Dew point (H CONFIG = DPT): 0 to 100 ºF

ⓘ *If custom psychrometric property scaling is required, refer to the Operations and Maintenance Manual.*

15. If the RS-485 network connection is required continue to step 16, otherwise skip to step 18.
16. Press the ↑↓ arrow buttons simultaneously to enter the MAIN MENU. The SETTINGS menu is displayed. Press the ENT button to select the top of the SETTINGS submenu category. Press the ↓ button until the RS-485 submenu category is visible. Press the ENT button to enter the RS-485 submenu. The NET OUT parameter is visible. Press the ENT button and set the NET OUT parameter to BACNET (BACnet MS/TP) or MODBUS (Modbus RTU). Press the ENT button to save the selection. Use the ↓ arrow button and continue through the RS-485 submenu to configure the remaining network parameters. Enable network communications by setting the RS485 COM parameter to "ON" and press the ENT button. Press the ESC button twice to return to normal operation.
17. Refer to the *A4 Operations and Maintenance Manual* for detailed information on the BACnet Objects and Modbus Registers supported by this device.
18. Startup is complete! If additional customization is desired, consult the *Operation and Maintenance Manual*.

VERIFICATION

Many installations require third-party airflow verification. If the airflow measuring device is within the measurement uncertainty of the verification technique, EBTRON strongly recommends that no field adjustment correction is made. EBTRON airflow measurement devices are factory calibrated to NIST traceable standards. Field adjustment is not recommended when installed in accordance to published guidelines.

If field adjustment is required, refer to the *Operation and Maintenance Manual*.

ⓘ *If minimum placement guidelines cannot be achieved, installed accuracy may be compromised. Transmitters can be field adjusted to match a third-party measurement. Adjusted field measurements typically result in comparative readings within ±3% of the third-party measurement. Be advised that the third-party measurement may have uncertainties greater than or equal to ±10% and should only be used to adjust the airflow measurement device if the probes do not meet minimum placement requirements or the discrepancy is greater than the uncertainty of the third-party source.*

NEED MORE HELP?

<u>EBTRON Customer Service</u>

For toll-free factory support call 1-800-2EBTRON (1-800-232-8766), Monday through Thursday 8:00 AM to 4:30 PM and Friday 8:00 AM to 2:00 PM eastern time.

<u>Your Local EBTRON Representative</u>

Visit EBTRON.com for the name and contact information of your local representative.

Advantage IV (A4) GTD116-P STARTUP GUIDE

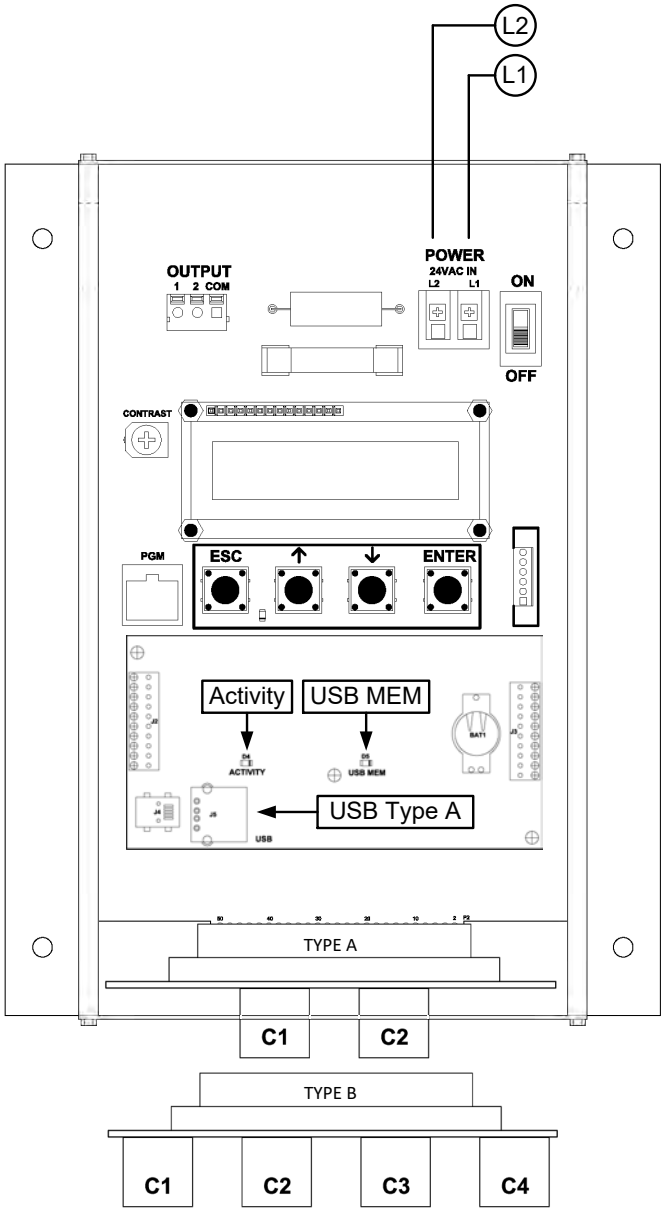

GTD116-P Parameters - Factory Defaults and Optional Settings/Ranges

Description	Parameter	Default	Optional Settings/Ranges	Units
System of Units	SYS	I-P (US customary)	SI (metric)	
Airflow Calculation Method	AIRFLOW	ACT (actual)	STD (standard mass flow)	
Altitude (for actual flow correction)	ALT	0	0 to 20000 [0 to 6000]	ft [m]
Low Limit Airflow Cutoff	LLIMIT	0 FPM	0 to 500 FPM [0.0 to 2.5 m/s]	
Area	AREA	*{Order Area}*	0.00 to 9999.99 [0.000 to 999.999]	sq ft [sq m]
Datalogger	Requires a Type A USB Datalogger "thumb drive" (see below)			
USB Port (turn off before removal)	USB WRITE	ON	OFF	

Refer to the O&M Manual for more information and/or additional parameter defaults, settings and ranges.

STARTUP INSTRUCTIONS:

1. Verify that the sensor probes are located where they meet EBTRON published installation guides.
2. Verify that the probes are properly spaced with the airflow arrows pointing in the direction of airflow.

⚠ *Improperly installed probes will compromise the installed accuracy of the device and degrade system performance.*

3. Verify that the transmitter is installed and wired in accordance with the *GTD116-P Wiring Guide* provided with the transmitter and power is provided to the transmitter.
4. Make sure the ductwork is clean and free of debris prior to fan startup.
5. Move the power switch to the "ON" position. Power-up faults, if detected, are displayed on the LCD. If any power up faults are detected, resolve all conflicts or contact EBTRON customer service at 1-800-232-8766 before proceeding..

⚠ *If extension cables have been added, the extension cable length must be entered into the transmitter. Refer to the Operations and Maintenance Manual for more information.*

6. The transmitter is fully functional as a factory calibrated airflow and temperature measurement device in I-P units (ft, FPM, CFM °F). Airflow (CFM) and temperature (°F) are displayed on the LCD.

ⓘ *If SI units are required, refer to the the Operations and Maintenance Manual.*

ⓘ *The factory default airflow output is set to actual airflow (FPM, CFM). If standard (mass) airflow (SFPM, SCFM) is required, refer to the Operations and Maintenance Manual.*

7. Verify that the area on the hang-tag matches the actual area of the duct or opening where the probes are located (less any internal insulation). If the area is different, modify the area parameter stored in the transmitter and use the correct area for any external conversion calculations from FPM to CFM.

⚠ *Failure to use the correct area will result in volumetric airflow (CFM) measurement error and degrade system performance. If the area parameter must be changed, refer to the Operations and Maintenance Manual.*

9. Transmitters with a USB data logger log the average airflow, average temperature, individual sensor node airflow and the individual sensor node temperature at 5-minute intervals using Universal Time Coordinated (UTC) based on an onboard real-time clock, whenever power is applied to the transmitter. Data files are automatically appended on power-up. The time zone and interval can be modified by the user using EB-Link software.
10. To insert a USB memory device ("thumb drive") for data logging continue to step 11, otherwise skip to step 14.
11. Install the USB memory device into the USB connector on the option card to start logging data.

It is a good practice to set the transmitter power switch to the "OFF" position before inserting the USB memory device.

12. The USB port must be enabled to log data.
13. Enable the USB WRITE parameter to start logging data. Press the ↑↓ arrow buttons simultaneously to enter the MAIN MENU. The SETTINGS menu is displayed. Press the ENT button to select the top of the SETTINGS submenu category. Press the ↓ button until the USB submenu category is visible. Press the ENT button. The USB WRITE parameter is visible. Press the ENT button and use the ↑↓ buttons to select ON. Press the ENT button to save the selection. Press the ESC button twice to return to normal operation.

ⓘ *Transmitters are shipped with the USB port parameter USB WRITE set to "ON".*

14. To remove the USB memory device and stop data logging continue to step 15, otherwise skip to step 17.
15. Disable the USB WRITE parameter stop logging data. Press the ↑↓ arrow buttons simultaneously to enter the MAIN MENU. The SETTINGS menu is displayed. Press the ENT button to select the top of the SETTINGS submenu category. Press the ↓ button until the USB submenu category is visible. Press the ENT button. The USB WRITE parameter is visible. Press the ENT button and use the ↑↓ buttons to select OFF. Press the ENT button to save the selection. Press the ESC button twice to return to normal operation.

⚠ Always set the USB WRITE parameter to "OFF" before removing the USB memory device to avoid data loss/and or damage.

16. Remove the USB memory device from the USB port, if desired.

It is a good practice to set the transmitter power switch to the "OFF" position before removing the USB memory device.

17. Startup is complete! If additional customization is desired, consult the *Operation and Maintenance Manual*.

VERIFICATION

Many installations require third-party airflow verification. If the airflow measuring device is within the measurement uncertainty of the verification technique, EBTRON strongly recommends that no field adjustment correction is made. EBTRON airflow measurement devices are factory calibrated to NIST traceable standards. Field adjustment is not recommended when installed in accordance to published guidelines.

If field adjustment is required, refer to the *Operation and Maintenance Manual*.

ⓘ *If minimum placement guidelines cannot be achieved, installed accuracy may be compromised. Transmitters can be field adjusted to match a third-party measurement. Adjusted field measurements typically result in comparative readings within ±3% of the third-party measurement. Be advised that the third-party measurement may have uncertainties greater than or equal to ±10% and should only be used to adjust the airflow measurement device if the probes do not meet minimum placement requirements or the discrepancy is greater than the uncertainty of the third-party source.*

FOR MORE INFORMATION ….

Operations and Maintenance Manual.

The *Operations and Maintenance Manual* is a comprehensive reference document that contains information on installation, startup, custom configuration, built-in tools, diagnostics, troubleshooting and maintenance.

NEED MORE HELP?

EBTRON Customer Service

For toll-free factory support call 1-800-2EBTRON (1-800-232-8766), Monday through Thursday 8:00 AM to 4:30 PM and Friday 8:00 AM to 2:00 PM eastern time.

Your Local EBTRON Representative

Visit EBTRON.com for the name and contact information of your local representative.

Advantage IV (A4) GTF116e-P STARTUP GUIDE

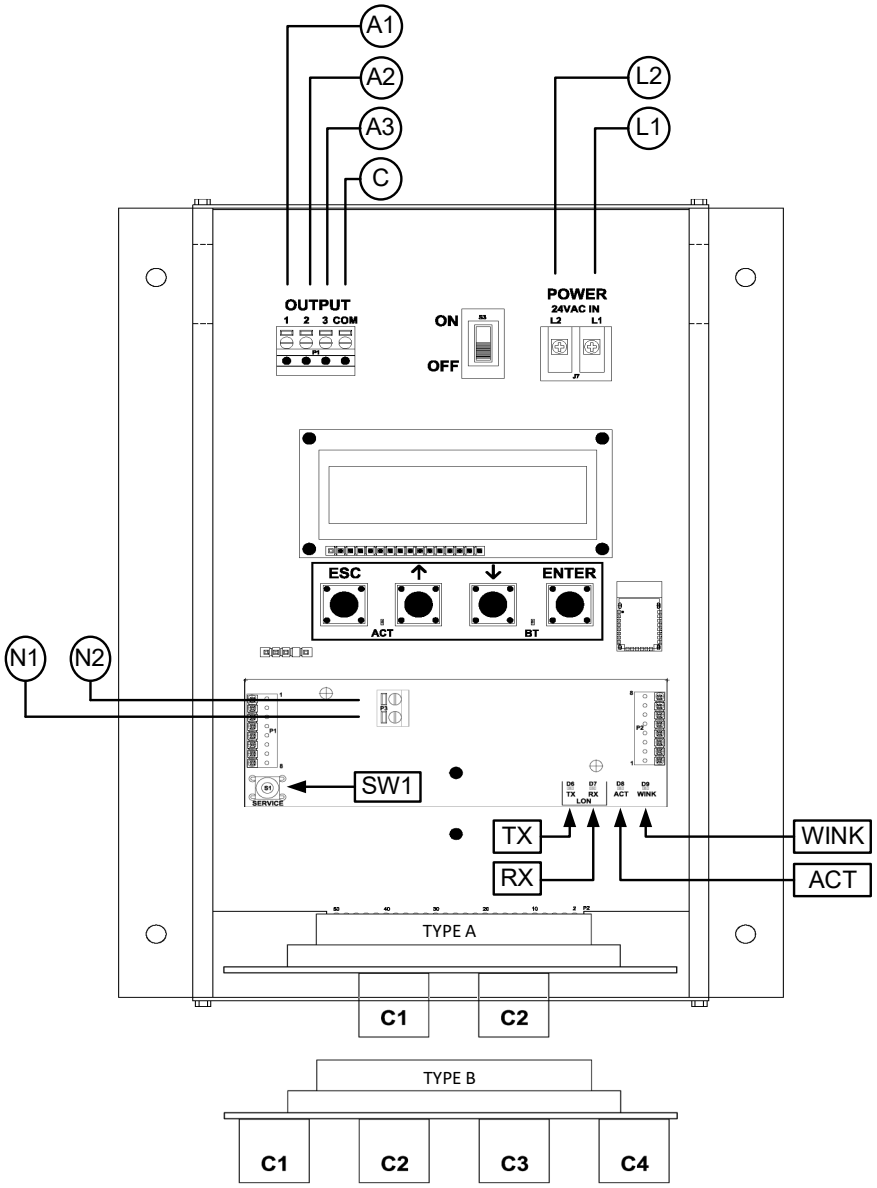

GTF116e-P Parameters - Factory Defaults and Optional Settings/Ranges

Description	Parameter	Default	Optional Settings/Ranges	Units
System of Units	SYS	I-P (US customary)	SI (metric)	
Airflow Calculation Method	AIRFLOW	ACT (actual)	STD (standard mass flow)	
Altitude (for actual flow correction)	ALT	0	AUTO, 0 to 20000 [0 to 6000]	ft [m]
Low Limit Airflow Cutoff	LLIMIT	0 FPM	0 to 500 FPM [0.0 to 2.5 m/s]	
Area	AREA	*{Order Area}*	0.00 to 9999.99 [0.000 to 999.999]	sq ft [sq m]
Humidity Sensor Config. (/H opt.)	H CONFIG	RH (relative humidity)	ENTH (enthalpy), DPT (dew point)	
Auto Pb Correct Psych. Values	Pb CORR	ON (onboard sensor)	OFF	
AO1, AO2 and AO3 Type	AOUT	4-20mA	0-10V, 0-5 V	
AO1 Assignment	AO1 ASGN	AF (Airflow)	None	
AO1 Unit of Measure	AO1 UM	FPM [m/s]	CFM [L/s]	
AO1 Minimum Scale Reading	AO1 MS	0	None	FPM [m/s]
AO1 Full Scale Reading	AO1 FS	5000 [25.0]	100 to 15000 [0.5 to 75.0]	FPM [m/s]
AO2 Assignment	AO2 ASGN	TEMP (Temperature)	ALRM (Alarm) or TRBL (System Trouble)	
AO2 Unit of Measure	AO2 UM	F [C]	None	°F [°C]
AO2 Minimum Scale Reading	AO2 MS	-20 [-30]	-50 to 160 [-50 to 70]	°F [°C]
AO2 Full Scale Reading	AO2 FS	160 [70]	-50 to 160 [-50 to 70]	°F [°C]
H CONFIG=RH (default)				
AO3 Assignment	AO3 ASGN	RH	None	
AO3 Unit of Measure	AO3 UM	% RH	None	
AO3 Minimum Scale Reading	AO3 MS	0	0 to 100	% RH
AO3 Full Scale Reading	AO3 FS	100	0 to 100	% RH
H CONFIG=ENTH				
AO3 Assignment	AO3 ASGN	ENTH	None	
AO3 Unit of Measure	AO3 UM	Btu/lb [kJ/kg]	None	
AO3 Minimum Scale Reading	AO3 MS	0	-20 to 400 [-40 to 800]	Btu/lb [kJ/kg]
AO3 Full Scale Reading	AO3 FS	200 [400]	-20 to 400 [-40 to 800]	Btu/lb [kJ/kg]
H CONFIG=DPT				
AO3 Assignment	AO3 ASGN	DPT	None	
AO3 Unit of Measure	AO3 UM	F DPT [C DPT]	None	
AO3 Minimum Scale Reading	AO3 MS	0	-50 to 160 [-50 to 70]	°F [°C]
AO3 Full Scale Reading	AO3 FS	100 [50]	-50 to 160 [-50 to 70]	°F [°C]
Lon Network xif File Link	https://ebtron.com/wp-content/uploads/software/EBTRON_116e.xif			

Refer to the O&M Manual for more information and/or additional parameter defaults, settings and ranges.

STARTUP INSTRUCTIONS:

1. Verify that the sensor probes are located where they meet EBTRON published installation guides.
2. Verify that the probes are properly spaced with the airflow arrows pointing in the direction of airflow.

⚠ *Improperly installed probes will compromise the installed accuracy of the device and degrade system performance.*

3. Verify that the transmitter is installed and wired in accordance with the *GTF116e-P Wiring Guide* provided with the transmitter and power is provided to the transmitter.
4. Make sure the ductwork is clean and free of debris prior to fan startup.
5. Move the power switch to the "ON" position. Power-up faults, if detected, are displayed on the LCD. If any power up faults are detected, resolve all conflicts or contact EBTRON customer service at 1-800-232-8766 before proceeding..

⚠ *If extension cables have been added, the extension cable length must be entered into the transmitter. Refer to the Operations and Maintenance Manual for more information.*

6. The transmitter is fully functional as a factory calibrated airflow and temperature measurement device in I-P units (ft, FPM, CFM °F). Airflow (CFM) and temperature (°F) are displayed on the LCD. If the transmitter is provided with the /H humidity sensor option, relative humidity (%RH) is also displayed.
7. If the /H humidity sensor option is provided, relative humidity (%RH) is displayed on the LCD. Enthalpy or dew point can also be displayed on the LCD by changing the H CONFIG parameter to ENTH (enthalpy) or DPT (dew point). Press the ↑↓ arrow buttons simultaneously to enter the MAIN MENU. The SETTINGS menu is displayed. Press the ENT button to select the top of the SETTINGS submenu category. Press the ↓ button until the GENERAL submenu category is visible. Press the ENT button to enter the GENERAL submenu. Press the ↓ button until the H CONFIG parameter is visible. Press the ENT button and set the H CONFIG parameter to ENTH (enthalpy) or DPT (dew point) using the ↑↓ buttons. Press the ENT button to save the selection. Press the ESC button twice to return to normal operation.

ⓘ *The H CONFIG setting specifies the psychrometric property assigned to analog output AO3.*

ⓘ *If SI units are required, refer to the Operations and Maintenance Manual.*

ⓘ *The factory default airflow output is set to actual airflow (FPM, CFM). If standard (mass) airflow (SFPM, SCFM) is required, refer to the Operations and Maintenance Manual.*

8. Verify that the area on the hang-tag matches the actual area of the duct or opening where the probes are located (less any internal insulation). If the area is different, modify the area parameter stored in the transmitter and use the correct area for any external conversion calculations from FPM to CFM.

⚠ *Failure to use the correct area will result in volumetric airflow (CFM) measurement error and degrade system performance. If the area parameter must be changed, refer to the Operations and Maintenance Manual.*

9. If analog output signals are used continue to step 10, otherwise skip to step 15.
10. The output signal type and range (4-20 mA, 0-5 VDC or 0-10VDC) of AO1, AO2 and AO3 is determined by the AOUT parameter. The transmitter is factory set to 4-20mA.

⚠ *The 4-20mA is "4-wire type" and not loop powered. Do not apply any excitation voltage to the output of the transmitter.*

11. Verify that the transmitter is configured to match the analog input requirements of the host controller. Press the ESC and ↑ buttons simultaneously to display the transmitter setting for the AOUT parameter. If the AOUT parameter is not correct, press the ENT button and use the ↑ and ↓ buttons to set AOUT. Press the ENT button to execute and display the change. Press the ESC button to return to normal operation.
12. The analog output signal for airflow (AO1) is linear. The minimum scale reading (0% output) of the airflow signal is fixed at 0 and the full scale reading (100% output) is factory set to 5,000 FPM.

Multiply the default full scale velocity (FPM)by the correct area of the measurement location to determine the full-scale or span (CFM) for the B.A.S. to avoid field configuration. EBTRON airflow measurement device accuracy is percent-of-reading. Changing the full scale reading does not affect measurement accuracy.

ⓘ *If custom airflow scaling or unit of measure are required, refer to the Operations and Maintenance Manual.*

13. The analog output signal for temperature (AO2) is linear. The minimum scale reading (0% output) is set to -20 ºF and full scale reading (100% output) is set to 160 ºF.

ⓘ *If custom temperature scaling is required, refer to the Operations and Maintenance Manual.*

ⓘ *AO2 can be configured for a high/low airflow alarm or system status alarm. Refer to the Operations and Maintenance Manual for more information.*

14. The analog output signal (AO3) for the psychrometric property specified is linear. The minimum scale reading (0% output) and full scale reading (100% output) is based on the psychrometric specified by H CONFIG. The factory default ranges for each psychrometric property output are as follows:
    - Relative humidity (H CONFIG = RH): 0 to 100%
    - Enthalpy (H CONFIG = ENTH): 0 to 200 Btu/lb
    - Dew point (H CONFIG = DPT): 0 to 100 ºF

ⓘ *If custom psychrometric property scaling is required, refer to the Operations and Maintenance Manual.*

15. If the LON network connection is required continue to step 16, otherwise skip to step 18.
16. LON transmitters are provided with a full featured LonWorks compatible interface. No transmitter configuration is required.

ⓘ *A "Service" push-button, SW1, is provided for device commissioning. Once the device is recognized commissioning can be completed by uploading the parameters from the device.*

17. Download the external interface file (.xif) if required by the installation software:
    https://ebtron.com/wp-content/uploads/software/EBTRON_116e.xif

ⓘ *A "Wink" LED is provided for easy device identification.*

ⓘ *An "Activity" LED and separate transmit and receive "TX" and "RX" indicators provide visual indication of transmitter and communication status. The "Activity" LED flashes on for 1 second, off for 1 second when the card is commissioned and online. The "Activity" LED remains illuminated constantly if there is an error.*

18. Startup is complete! If additional customization is desired, consult the *Operation and Maintenance Manual*.

VERIFICATION

Many installations require third-party airflow verification. If the airflow measuring device is within the measurement uncertainty of the verification technique, EBTRON strongly recommends that no field adjustment correction is made. EBTRON airflow measurement devices are factory calibrated to NIST traceable standards. Field adjustment is not recommended when installed in accordance to published guidelines.

If field adjustment is required, refer to the *Operation and Maintenance Manual*.

ⓘ *If minimum placement guidelines cannot be achieved, installed accuracy may be compromised. Transmitters can be field adjusted to match a third-party measurement. Adjusted field measurements typically result in comparative readings within ±3% of the third-party measurement. Be advised that the third-party measurement may have uncertainties greater than or equal to ±10% and should only be used to adjust the airflow measurement device if the probes do not meet minimum placement requirements or the discrepancy is greater than the uncertainty of the third-party source.*

NEED MORE HELP?

EBTRON Customer Service

For toll-free factory support call 1-800-2EBTRON (1-800-232-8766), Monday through Thursday 8:00 AM to 4:30 PM and Friday 8:00 AM to 2:00 PM eastern time.

Your Local EBTRON Representative

Visit EBTRON.com for the name and contact information of your local representative.

Advantage IV (A4) GTL116-P STARTUP GUIDE

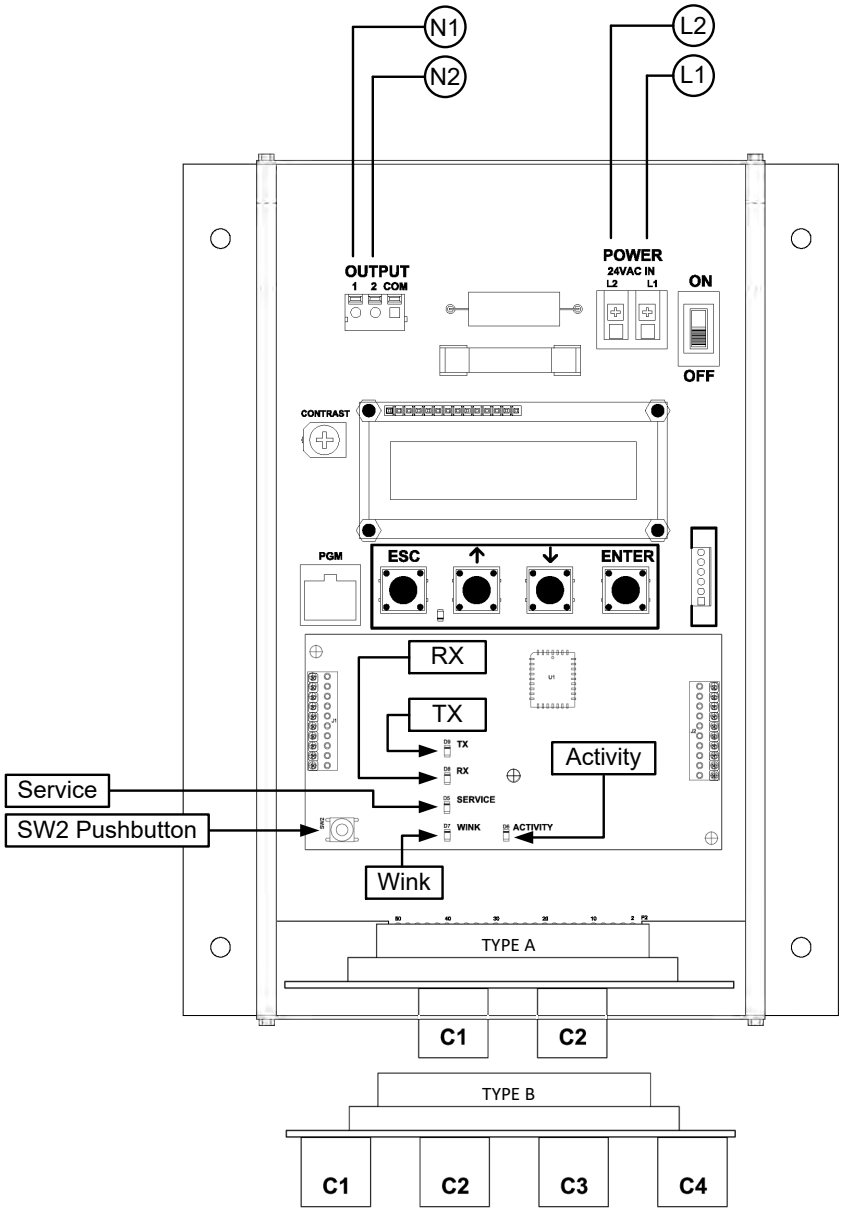

GTL116-P Parameters - Factory Defaults and Optional Settings/Ranges

Description	Parameter	Default	Optional Settings/Ranges	Units
System of Units	SYS	I-P (US customary)	SI (metric)	
Airflow Calculation Method	AIRFLOW	ACT (actual)	STD (standard mass flow)	
Altitude (for actual flow correction)	ALT	0	0 to 20000 [0 to 6000]	ft [m]
Low Limit Airflow Cutoff	LLIMIT	0 FPM	0 to 500 FPM [0.0 to 2.5 m/s]	
Area	AREA	*{Order Area}*	0.00 to 9999.99 [0.000 to 999.999]	sq ft [sq m]
Lon Network xif File Link	https://ebtron.com/wp-content/uploads/software/EBTRON_116.XIF			

Refer to the O&M Manual for more information and/or additional parameter defaults, settings and ranges.

STARTUP INSTRUCTIONS:

1. Verify that the sensor probes are located where they meet EBTRON published installation guides.
2. Verify that the probes are properly spaced with the airflow arrows pointing in the direction of airflow.

⚠ *Improperly installed probes will compromise the installed accuracy of the device and degrade system performance.*

3. Verify that the transmitter is installed and wired in accordance with the *GTL116-P Wiring Guide* provided with the transmitter and power is provided to the transmitter.
4. Make sure the ductwork is clean and free of debris prior to fan startup.
5. Move the power switch to the "ON" position. Power-up faults, if detected, are displayed on the LCD. If any power up faults are detected, resolve all conflicts or contact EBTRON customer service at 1-800-232-8766 before proceeding..

⚠ *If extension cables have been added, the extension cable length must be entered into the transmitter. Refer to the Operations and Maintenance Manual for more information.*

6. The transmitter is fully functional as a factory calibrated airflow and temperature measurement device in I-P units (ft, FPM, CFM °F). Airflow (CFM) and temperature (°F) are displayed on the LCD.

ⓘ *If SI units are required, refer to the the Operations and Maintenance Manual.*

ⓘ *The factory default airflow output is set to actual airflow (FPM, CFM). If standard (mass) airflow (SFPM, SCFM) is required, refer to the Operations and Maintenance Manual.*

7. Verify that the area on the hang-tag matches the actual area of the duct or opening where the probes are located (less any internal insulation). If the area is different, modify the area parameter stored in the transmitter and use the correct area for any external conversion calculations from FPM to CFM.

⚠ *Failure to use the correct area will result in volumetric airflow (CFM) measurement error and degrade system performance. If the area parameter must be changed, refer to the Operations and Maintenance Manual.*

8. If the LON network connection is required continue to step 9, otherwise skip to step 10.
9. LON transmitters are provided with a full featured LonWorks compatible interface. No transmitter configuration is required.

ⓘ *A "Service" push-button, SW2, is provided for device commissioning. Once the device is recognized commissioning can be completed by uploading the parameters from the device.*

9. Download the external interface file (.xif) if required by the installation software:
   https://ebtron.com/wp-content/uploads/software/EBTRON_116.XIF

ⓘ *A "Wink" LED is provided for easy device identification.*

ⓘ *An "Activity" LED and separate transmit and receive "TX" and "RX" indicators provide visual*

indication of transmitter and communication status. The "Activity" LED flashes on for 1 second, off for 1 second when the card is commissioned and online. The "Activity" LED remains illuminated constantly if there is an error.

10. Startup is complete! If additional customization is desired, consult the *Operation and Maintenance Manual*.

VERIFICATION

Many installations require third-party airflow verification. If the airflow measuring device is within the measurement uncertainty of the verification technique, EBTRON strongly recommends that no field adjustment correction is made. EBTRON airflow measurement devices are factory calibrated to NIST traceable standards. Field adjustment is not recommended when installed in accordance to published guidelines.

If field adjustment is required, refer to the *Operation and Maintenance Manual*.

ⓘ *If minimum placement guidelines cannot be achieved, installed accuracy may be compromised. Transmitters can be field adjusted to match a third-party measurement. Adjusted field measurements typically result in comparative readings within ±3% of the third-party measurement. Be advised that the third-party measurement may have uncertainties greater than or equal to ±10% and should only be used to adjust the airflow measurement device if the probes do not meet minimum placement requirements or the discrepancy is greater than the uncertainty of the third-party source.*

FOR MORE INFORMATION ….

Operations and Maintenance Manual.

The *Operations and Maintenance Manual* is a comprehensive reference document that contains information on installation, startup, custom configuration, built-in tools, diagnostics, troubleshooting and maintenance.

NEED MORE HELP?

EBTRON Customer Service

For toll-free factory support call 1-800-2EBTRON (1-800-232-8766), Monday through Thursday 8:00 AM to 4:30 PM and Friday 8:00 AM to 2:00 PM eastern time.

Your Local EBTRON Representative

Visit EBTRON.com for the name and contact information of your local representative.

Advantage IV (A4) GTM116-P STARTUP GUIDE

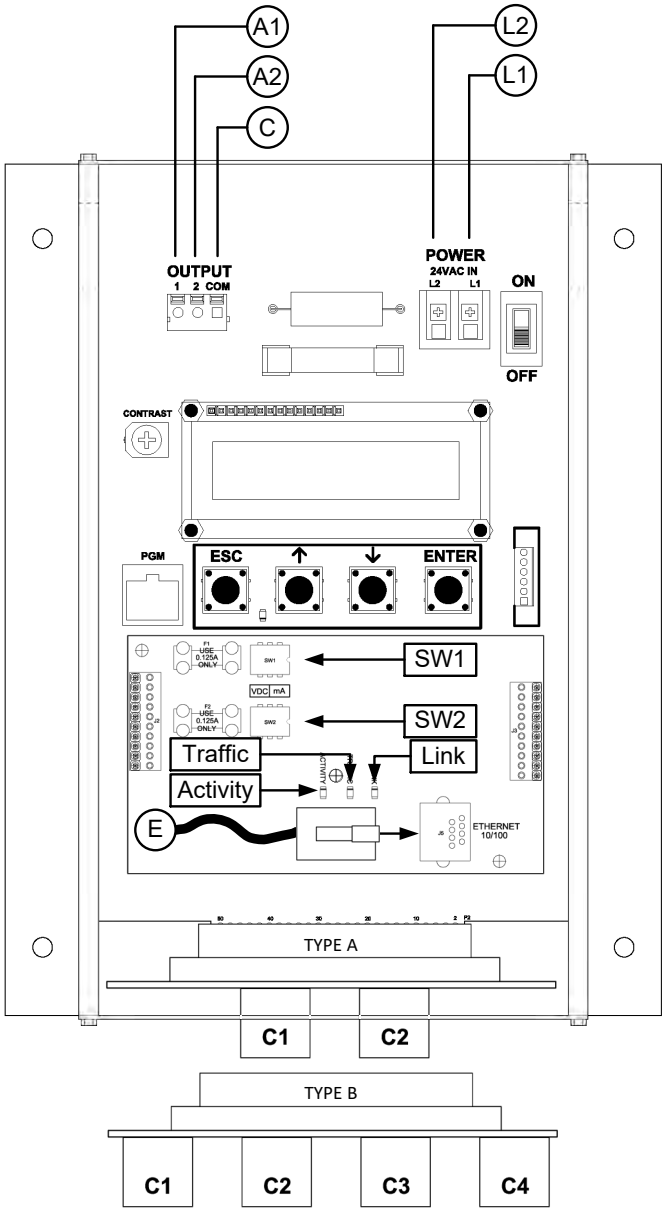

GTM116-P Parameters - Factory Defaults and Optional Settings/Ranges

Description	Parameter	Default	Optional Settings/Ranges	Units
System of Units	SYS	I-P (US customary)	SI (metric)	
Airflow Calculation Method	AIRFLOW	ACT (actual)	STD (standard mass flow)	
Altitude (for actual flow correction)	ALT	0	0 to 20000 [0 to 6000]	ft [m]
Low Limit Airflow Cutoff	LLIMIT	0 FPM	0 to 500 FPM [0.0 to 2.5 m/s]	
Area	AREA	*{Order Area}*	0.00 to 9999.99 [0.000 to 999.999]	sq ft [sq m]
AO1 Type	AOUT1	4-20mA	0-10V, 0-5 V	
AO2 Type	AOUT2	4-20mA	0-10V, 0-5 V	
AO1 Assignment	AO1 ASGN	AF (Airflow)	None	
AO1 Unit of Measure	AO1 UM	FPM [m/s]	CFM [L/s]	
AO1 Minimum Scale Reading	AO1 MS	0	None	FPM [m/s]
AO1 Full Scale Reading	AO1 FS	5000 [25.0]	100 to 15000 [0.5 to 75.0]	FPM [m/s]
AO2 Assignment	AO2 ASGN	TEMP (Temperature)	ALRM (Alarm) or TRBL (System Trouble)	
AO2 Unit of Measure	AO2 UM	F [C]	None	°F [°C]
AO2 Minimum Scale Reading	AO2 MS	-20 [-30]	-50 to 160 [-50 to 70]	°F [°C]
AO2 Full Scale Reading	AO2 FS	160 [70]	-50 to 160 [-50 to 70]	°F [°C]
Ethernet Network	Simultaneous BACnet IP or BACnet Ethernet, Modbus TCP, and TCP/IP (requires configuration)			

Refer to the O&M Manual for more information and/or additional parameter defaults, settings and ranges.

STARTUP INSTRUCTIONS:

1. Verify that the sensor probes are located where they meet EBTRON published installation guides.
2. Verify that the probes are properly spaced with the airflow arrows pointing in the direction of airflow.

⚠ *Improperly installed probes will compromise the installed accuracy of the device and degrade system performance.*

3. Verify that the transmitter is installed and wired in accordance with the *GTM116-P Wiring Guide* provided with the transmitter and power is provided to the transmitter.
4. Make sure the ductwork is clean and free of debris prior to fan startup.
5. Move the power switch to the "ON" position. Power-up faults, if detected, are displayed on the LCD. If any power up faults are detected, resolve all conflicts or contact EBTRON customer service at 1-800-232-8766 before proceeding..

⚠ *If extension cables have been added, the extension cable length must be entered into the transmitter. Refer to the Operations and Maintenance Manual for more information.*

6. The transmitter is fully functional as a factory calibrated airflow and temperature measurement device in I-P units (ft, FPM, CFM °F). Airflow (CFM) and temperature (°F) are displayed on the LCD.

ⓘ *If SI units are required, refer to the the Operations and Maintenance Manual.*

ⓘ *The factory default airflow output is set to actual airflow (FPM, CFM). If standard (mass) airflow (SFPM, SCFM) is required, refer to the Operations and Maintenance Manual.*

7. Verify that the area on the hang-tag matches the actual area of the duct or opening where the probes are located (less any internal insulation). If the area is different, modify the area parameter stored in the transmitter and use the correct area for any external conversion calculations from FPM to CFM.

⚠ *Failure to use the correct area will result in volumetric airflow (CFM) measurement error and degrade system performance. If the area parameter must be changed, refer to the Operations and Maintenance Manual.*

8. If analog output signals are used continue to step 9, otherwise skip to step 14.
9. Verify that the transmitter is configured to match the analog input requirements of the host controller.

10. The output signal type (mA or VDC) of AO1 and AO2 are determined by switches SW1 (AO1) and SW2 (AO2) on the output card. The transmitter is factory set to 4-20mA. Verify the switches for the proper output signal type.

⚠ *The 4-20mA is "4-wire type" and not loop powered. Do not apply any excitation voltage to the output of the transmitter.*

11. Press the ESC and ↑ buttons simultaneously to display the transmitter setting for the AOUT1 (AO1) parameter. Use the ↓ button to view the setting for the AOUT (AO2) parameter. If the output signal type (mA or VDC) is not correct, position switches SW1 and/or SW2 on the option card board for the appropriate signal type. If VDC is selected and a 0-5V output is required in lieu of 0-10V, use the ↑↓ buttons until AOUT1 is visible. Press the ENT button and use the ↑↓ buttons to select 0-5V. Press the ENT button to execute and display the change. Do the same for AOUT2, if required. Press the ESC button to return to normal operation..
12. The analog output signal for airflow (AO1) is linear. The minimum scale reading (0% output) of the airflow signal is fixed at 0 and the full scale reading (100% output) is factory set to 5,000 FPM.

ⓘ *If the transmitter is connected to a -U, -T or - B probe type, the full scale is factory set to 3,000 FPM. If the transmitter is connected to a -B probe type the minimum scale is factory set to -3,000 FPM (bi-directional output).*

Multiply the default full scale velocity (FPM)by the correct area of the measurement location to determine the full-scale or span (CFM) for the B.A.S. to avoid field configuration. EBTRON airflow measurement device accuracy is percent-of-reading. Changing the full scale reading does not affect measurement accuracy.

ⓘ *If custom airflow scaling or unit of measure are required, refer to the Operations and Maintenance Manual.*

13. The analog output signal for temperature (AO2) is linear. The minimum scale reading (0% output) is set to -20 ºF and full scale reading (100% output) is set to 160 ºF.

ⓘ *If custom temperature scaling is required, refer to the Operations and Maintenance Manual.*

ⓘ *AO2 can be configured for a high/low airflow alarm or system status alarm. Refer to the Operations and Maintenance Manual for more information.*

14. If the Ethernet network connection is required continue to step 15, otherwise skip to step 17.
15. Press the ↑↓ arrow buttons simultaneously to enter the MAIN MENU. The SETTINGS menu is displayed. Press the ENT button to select the top of the SETTINGS submenu category. Press the ↓ button until the ETHERNET submenu category is visible. Press the ENT button again to enter the ETHERNET submenu. Configure the network parameters and press the ESC button twice to return to normal operation.

ⓘ *GTM116 transmitters support simultaneous communication via BACnet IP or BACnet Ethernet, Modbus TCP, and TCP/IP.*

16. Refer to the *Operations and Maintenance Manual* for detailed information on the BACnet Objects and Modbus Registers supported by this device.
17. Startup is complete! If additional customization is desired, consult the *Operation and Maintenance Manual*.

VERIFICATION

Many installations require third-party airflow verification. If the airflow measuring device is within the measurement uncertainty of the verification technique, EBTRON strongly recommends that no field adjustment correction is made. EBTRON airflow measurement devices are factory calibrated to NIST traceable standards. Field adjustment is not recommended when installed in accordance to published guidelines.

If field adjustment is required, refer to the *Operation and Maintenance Manual*.

ⓘ *If minimum placement guidelines cannot be achieved, installed accuracy may be compromised. Transmitters can be field adjusted to match a third-party measurement. Adjusted field measurements typically result in comparative readings within ±3% of the third-party measurement. Be advised that the third-party measurement may have uncertainties greater than or equal to ±10% and should only be used to adjust the airflow measurement device if the probes do not meet minimum placement requirements or the discrepancy is greater than the uncertainty of the third-party source.*

FOR MORE INFORMATION ….

Operations and Maintenance Manual.

The *Operations and Maintenance Manual* is a comprehensive reference document that contains information on installation, startup, custom configuration, built-in tools, diagnostics, troubleshooting and maintenance.

NEED MORE HELP?

EBTRON Customer Service

For toll-free factory support call 1-800-2EBTRON (1-800-232-8766), Monday through Thursday 8:00 AM to 4:30 PM and Friday 8:00 AM to 2:00 PM eastern time.

Your Local EBTRON Representative

Visit EBTRON.com for the name and contact information of your local representative.

Advantage IV (A4) GTM116e-P STARTUP GUIDE

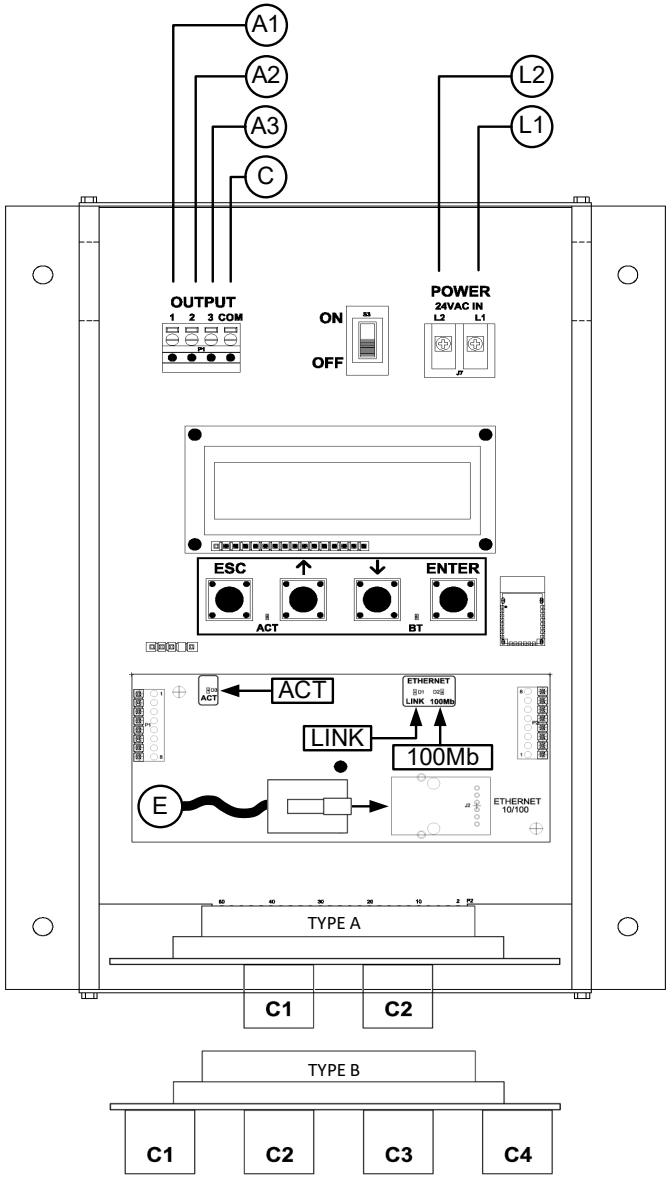

GTM116e-P Parameters - Factory Defaults and Optional Settings/Ranges

Description	Parameter	Default	Optional Settings/Ranges	Units
System of Units	SYS	I-P (US customary)	SI (metric)	
Airflow Calculation Method	AIRFLOW	ACT (actual)	STD (standard mass flow)	
Altitude (for actual flow correction)	ALT	0	AUTO, 0 to 20000 [0 to 6000]	ft [m]
Low Limit Airflow Cutoff	LLIMIT	0 FPM	0 to 500 FPM [0.0 to 2.5 m/s]	
Area	AREA	*{Order Area}*	0.00 to 9999.99 [0.000 to 999.999]	sq ft [sq m]
Humidity Sensor Config. (/H opt.)	H CONFIG	RH (relative humidity)	ENTH (enthalpy), DPT (dew point)	
Auto Pb Correct Psych. Values	Pb CORR	ON (onboard sensor)	OFF	
AO1, AO2 and AO3 Type	AOUT	4-20mA	0-10V, 0-5 V	
AO1 Assignment	AO1 ASGN	AF (Airflow)	None	
AO1 Unit of Measure	AO1 UM	FPM [m/s]	CFM [L/s]	
AO1 Minimum Scale Reading	AO1 MS	0	None	FPM [m/s]
AO1 Full Scale Reading	AO1 FS	5000 [25.0]	100 to 15000 [0.5 to 75.0]	FPM [m/s]
AO2 Assignment	AO2 ASGN	TEMP (Temperature)	ALRM (Alarm) or TRBL (System Trouble)	
AO2 Unit of Measure	AO2 UM	F [C]	None	°F [°C]
AO2 Minimum Scale Reading	AO2 MS	-20 [-30]	-50 to 160 [-50 to 70]	°F [°C]
AO2 Full Scale Reading	AO2 FS	160 [70]	-50 to 160 [-50 to 70]	°F [°C]
H CONFIG=RH (default)				
AO3 Assignment	AO3 ASGN	RH	None	
AO3 Unit of Measure	AO3 UM	% RH	None	
AO3 Minimum Scale Reading	AO3 MS	0	0 to 100	% RH
AO3 Full Scale Reading	AO3 FS	100	0 to 100	% RH
H CONFIG=ENTH				
AO3 Assignment	AO3 ASGN	ENTH	None	
AO3 Unit of Measure	AO3 UM	Btu/lb [kJ/kg]	None	
AO3 Minimum Scale Reading	AO3 MS	0	-20 to 400 [-40 to 800]	Btu/lb [kJ/kg]
AO3 Full Scale Reading	AO3 FS	200 [400]	-20 to 400 [-40 to 800]	Btu/lb [kJ/kg]
H CONFIG=DPT				
AO3 Assignment	AO3 ASGN	DPT	None	
AO3 Unit of Measure	AO3 UM	F DPT [C DPT]	None	
AO3 Minimum Scale Reading	AO3 MS	0	-50 to 160 [-50 to 70]	°F [°C]
AO3 Full Scale Reading	AO3 FS	100 [50]	-50 to 160 [-50 to 70]	°F [°C]
Ethernet Network	Simultaneous BACnet IP or BACnet Ethernet, Modbus TCP, and TCP/IP (requires configuration)			

Refer to the O&M Manual for more information and/or additional parameter defaults, settings and ranges.

STARTUP INSTRUCTIONS:

1. Verify that the sensor probes are located where they meet EBTRON published installation guides.
2. Verify that the probes are properly spaced with the airflow arrows pointing in the direction of airflow.

⚠ *Improperly installed probes will compromise the installed accuracy of the device and degrade system performance.*

3. Verify that the transmitter is installed and wired in accordance with the *GTM116e-P Wiring Guide* provided with the transmitter and power is provided to the transmitter.
4. Make sure the ductwork is clean and free of debris prior to fan startup.
5. Move the power switch to the "ON" position. Power-up faults, if detected, are displayed on the LCD. If any power up faults are detected, resolve all conflicts or contact EBTRON customer service at 1-800-232-8766 before proceeding..

⚠ *If extension cables have been added, the extension cable length must be entered into the transmitter. Refer to the Operations and Maintenance Manual for more information.*

6. The transmitter is fully functional as a factory calibrated airflow and temperature measurement device in I-P units (ft, FPM, CFM °F). Airflow (CFM) and temperature (°F) are displayed on the LCD. If the transmitter is provided with the /H humidity sensor option, relative humidity (%RH) is also displayed.
7. If the /H humidity sensor option is provided, relative humidity (%RH) is displayed on the LCD. Enthalpy or dew point can also be displayed on the LCD by changing the H CONFIG parameter to ENTH (enthalpy) or DPT (dew point). Press the ↑↓ arrow buttons simultaneously to enter the MAIN MENU. The SETTINGS menu is displayed. Press the ENT button to select the top of the SETTINGS submenu category. Press the ↓ button until the GENERAL submenu category is visible. Press the ENT button to enter the GENERAL submenu. Press the ↓ button until the H CONFIG parameter is visible. Press the ENT button and set the H CONFIG parameter to ENTH (enthalpy) or DPT (dew point) using the ↑↓ buttons. Press the ENT button to save the selection. Press the ESC button twice to return to normal operation.

ⓘ *The H CONFIG setting specifies the psychrometric property assigned to analog output AO3.*

ⓘ *If SI units are required, refer to the Operations and Maintenance Manual.*

ⓘ *The factory default airflow output is set to actual airflow (FPM, CFM). If standard (mass) airflow (SFPM, SCFM) is required, refer to the Operations and Maintenance Manual.*

8. Verify that the area on the hang-tag matches the actual area of the duct or opening where the probes are located (less any internal insulation). If the area is different, modify the area parameter stored in the transmitter and use the correct area for any external conversion calculations from FPM to CFM.

⚠ *Failure to use the correct area <u>will</u> result in volumetric airflow (CFM) measurement error and degrade system performance. If the area parameter must be changed, refer to the Operations and Maintenance Manual.*

9. If analog output signals are used continue to step 10, otherwise skip to step 15.
10. The output signal type and range (4-20 mA, 0-5 VDC or 0-10VDC) of AO1, AO2 and AO3 is determined by the AOUT parameter. The transmitter is factory set to 4-20mA.

⚠ *The 4-20mA is "4-wire type" and not loop powered. Do not apply any excitation voltage to the output of the transmitter.*

11. Verify that the transmitter is configured to match the analog input requirements of the host controller. Press the ESC and ↑ buttons simultaneously to display the transmitter setting for the AOUT parameter. If the AOUT parameter is not correct, press the ENT button and use the ↑ and ↓ buttons to set AOUT. Press the ENT button to execute and display the change. Press the ESC button to return to normal operation.
12. The analog output signal for airflow (AO1) is linear. The minimum scale reading (0% output) of the airflow signal is fixed at 0 and the full scale reading (100% output) is factory set to 5,000 FPM.

Multiply the default full scale velocity (FPM)by the correct area of the measurement location to determine the full-scale or span (CFM) for the B.A.S. to avoid field configuration. EBTRON airflow measurement device accuracy is percent-of-reading. Changing the full scale reading does not affect measurement accuracy.

ⓘ *If custom airflow scaling or unit of measure are required, refer to the Operations and Maintenance Manual.*

13. The analog output signal for temperature (AO2) is linear. The minimum scale reading (0% output) is set to -20 ºF and full scale reading (100% output) is set to 160 ºF.

ⓘ *If custom temperature scaling is required, refer to the Operations and Maintenance Manual.*

ⓘ *AO2 can be configured for a high/low airflow alarm or system status alarm. Refer to the Operations and Maintenance Manual for more information.*

14. The analog output signal (AO3) for the psychrometric property specified is linear. The minimum scale reading (0% output) and full scale reading (100% output) is based on the psychrometric specified by H CONFIG. The factory default ranges for each psychrometric property output are as follows:
    - Relative humidity (H CONFIG = RH): 0 to 100%
    - Enthalpy (H CONFIG = ENTH): 0 to 200 Btu/lb
    - Dew point (H CONFIG = DPT): 0 to 100 ºF

ⓘ *If custom psychrometric property scaling is required, refer to the Operations and Maintenance Manual.*

15. If the Ethernet network connection is required continue to step 16, otherwise skip to step 20.
16. Press the ↑↓ arrow buttons simultaneously to enter the MAIN MENU. The SETTINGS menu is displayed. Press the ENT button to select the top of the SETTINGS submenu category. Press the ↓ button until the ETHERNET submenu category is visible. Press the ENT button again to enter the ETHERNET submenu. Configure the network parameters and press the ESC button twice to return to normal operation.

ⓘ *GTM116e transmitters support simultaneous communication via BACnet IP or BACnet Ethernet, Modbus TCP, and TCP/IP.*

17. Refer to the *Operations and Maintenance Manual* for detailed information on the BACnet Objects and Modbus Registers supported by this device.
18. Startup is complete! If additional customization is desired, consult the *Operation and Maintenance Manual*.

VERIFICATION

Many installations require third-party airflow verification. If the airflow measuring device is within the measurement uncertainty of the verification technique, EBTRON strongly recommends that no field adjustment correction is made. EBTRON airflow measurement devices are factory calibrated to NIST traceable standards. Field adjustment is not recommended when installed in accordance to published guidelines.

If field adjustment is required, refer to the *Operation and Maintenance Manual*.

ⓘ *If minimum placement guidelines cannot be achieved, installed accuracy may be compromised. Transmitters can be field adjusted to match a third-party measurement. Adjusted field measurements typically result in comparative readings within ±3% of the third-party measurement. Be advised that the third-party measurement may have uncertainties greater than or equal to ±10% and should only be used to adjust the airflow measurement device if the probes do not meet minimum placement requirements or the discrepancy is greater than the uncertainty of the third-party source.*

NEED MORE HELP?

<u>EBTRON Customer Service</u>

For toll-free factory support call 1-800-2EBTRON (1-800-232-8766), Monday through Thursday 8:00 AM to 4:30 PM and Friday 8:00 AM to 2:00 PM eastern time.

<u>Your Local EBTRON Representative</u>

Visit EBTRON.com for the name and contact information of your local representative.

Advantage IV (A4) GTU116e-P STARTUP GUIDE

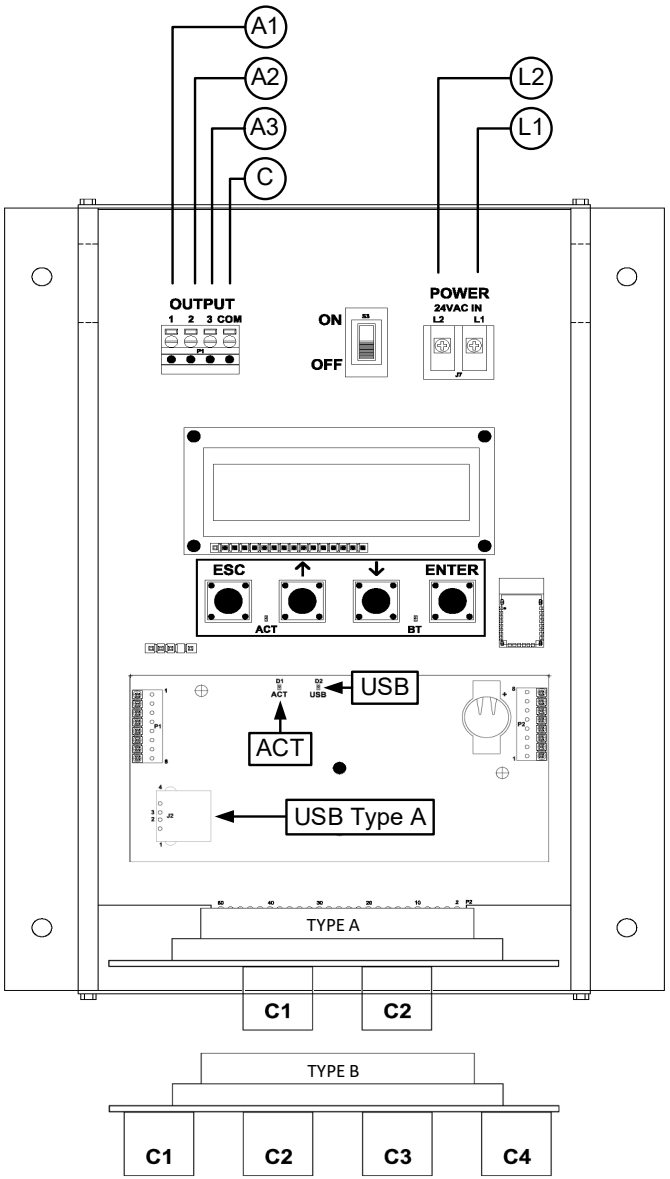

GTU116e-P Parameters - Factory Defaults and Optional Settings/Ranges

Description	Parameter	Default	Optional Settings/Ranges	Units
System of Units	SYS	I-P (US customary)	SI (metric)	
Airflow Calculation Method	AIRFLOW	ACT (actual)	STD (standard mass flow)	
Altitude (for actual flow correction)	ALT	0	AUTO, 0 to 20000 [0 to 6000]	ft [m]
Low Limit Airflow Cutoff	LLIMIT	0 FPM	0 to 500 FPM [0.0 to 2.5 m/s]	
Area	AREA	*{Order Area}*	0.00 to 9999.99 [0.000 to 999.999]	sq ft [sq m]
Humidity Sensor Config. (/H opt.)	H CONFIG	RH (relative humidity)	ENTH (enthalpy), DPT (dew point)	
Auto Pb Correct Psych. Values	Pb CORR	ON (onboard sensor)	OFF	
AO1, AO2 and AO3 Type	AOUT	4-20mA	0-10V, 0-5 V	
AO1 Assignment	AO1 ASGN	AF (Airflow)	None	
AO1 Unit of Measure	AO1 UM	FPM [m/s]	CFM [L/s]	
AO1 Minimum Scale Reading	AO1 MS	0	None	FPM [m/s]
AO1 Full Scale Reading	AO1 FS	5000 [25.0]	100 to 15000 [0.5 to 75.0]	FPM [m/s]
AO2 Assignment	AO2 ASGN	TEMP (Temperature)	ALRM (Alarm) or TRBL (System Trouble)	
AO2 Unit of Measure	AO2 UM	F [C]	None	°F [°C]
AO2 Minimum Scale Reading	AO2 MS	-20 [-30]	-50 to 160 [-50 to 70]	°F [°C]
AO2 Full Scale Reading	AO2 FS	160 [70]	-50 to 160 [-50 to 70]	°F [°C]
H CONFIG=RH (default)				
AO3 Assignment	AO3 ASGN	RH	None	
AO3 Unit of Measure	AO3 UM	% RH	None	
AO3 Minimum Scale Reading	AO3 MS	0	0 to 100	% RH
AO3 Full Scale Reading	AO3 FS	100	0 to 100	% RH
H CONFIG=ENTH				
AO3 Assignment	AO3 ASGN	ENTH	None	
AO3 Unit of Measure	AO3 UM	Btu/lb [kJ/kg]	None	
AO3 Minimum Scale Reading	AO3 MS	0	-20 to 400 [-40 to 800]	Btu/lb [kJ/kg]
AO3 Full Scale Reading	AO3 FS	200 [400]	-20 to 400 [-40 to 800]	Btu/lb [kJ/kg]
H CONFIG=DPT				
AO3 Assignment	AO3 ASGN	DPT	None	
AO3 Unit of Measure	AO3 UM	F DPT [C DPT]	None	
AO3 Minimum Scale Reading	AO3 MS	0	-50 to 160 [-50 to 70]	°F [°C]
AO3 Full Scale Reading	AO3 FS	100 [50]	-50 to 160 [-50 to 70]	°F [°C]
Datalogger	Requires a Type A USB Datalogger "thumb drive" (see below)			
USB Port (turn off before removal)	USB WRITE	ON	OFF	

Refer to the O&M Manual for more information and/or additional parameter defaults, settings and ranges.

STARTUP INSTRUCTIONS:

1. Verify that the sensor probes are located where they meet EBTRON published installation guides.
2. Verify that the probes are properly spaced with the airflow arrows pointing in the direction of airflow.

⚠ *Improperly installed probes will compromise the installed accuracy of the device and degrade system performance.*

3. Verify that the transmitter is installed and wired in accordance with the *GTU116e-P Wiring Guide* provided with the transmitter and power is provided to the transmitter.
4. Make sure the ductwork is clean and free of debris prior to fan startup.
5. Move the power switch to the "ON" position. Power-up faults, if detected, are displayed on the LCD. If any power up faults are detected, resolve all conflicts or contact EBTRON customer service at 1-800-232-8766 before proceeding..

⚠ *If extension cables have been added, the extension cable length must be entered into the transmitter. Refer to the Operations and Maintenance Manual for more information.*

6. The transmitter is fully functional as a factory calibrated airflow and temperature measurement device in I-P units (ft, FPM, CFM °F). Airflow (CFM) and temperature (°F) are displayed on the LCD. If the transmitter is provided with the /H humidity sensor option, relative humidity (%RH) is also displayed.
7. If the /H humidity sensor option is provided, relative humidity (%RH) is displayed on the LCD. Enthalpy or dew point can also be displayed on the LCD by changing the H CONFIG parameter to ENTH (enthalpy) or DPT (dew point). Press the ↑↓ arrow buttons simultaneously to enter the MAIN MENU. The SETTINGS menu is displayed. Press the ENT button to select the top of the SETTINGS submenu category. Press the ↓ button until the GENERAL submenu category is visible. Press the ENT button to enter the GENERAL submenu. Press the ↓ button until the H CONFIG parameter is visible. Press the ENT button and set the H CONFIG parameter to ENTH (enthalpy) or DPT (dew point) using the ↑↓ buttons. Press the ENT button to save the selection. Press the ESC button twice to return to normal operation.

ⓘ *The H CONFIG setting specifies the psychrometric property assigned to analog output AO3.*

ⓘ *If SI units are required, refer to the Operations and Maintenance Manual.*

ⓘ *The factory default airflow output is set to actual airflow (FPM, CFM). If standard (mass) airflow (SFPM, SCFM) is required, refer to the Operations and Maintenance Manual.*

8. Verify that the area on the hang-tag matches the actual area of the duct or opening where the probes are located (less any internal insulation). If the area is different, modify the area parameter stored in the transmitter and use the correct area for any external conversion calculations from FPM to CFM.

⚠ *Failure to use the correct area <u>will</u> result in volumetric airflow (CFM) measurement error and degrade system performance. If the area parameter must be changed, refer to the Operations and Maintenance Manual.*

9. If analog output signals are used continue to step 10, otherwise skip to step 15.
10. The output signal type and range (4-20 mA, 0-5 VDC or 0-10VDC) of AO1, AO2 and AO3 is determined by the AOUT parameter. The transmitter is factory set to 4-20mA.

⚠ *The 4-20mA is "4-wire type" and not loop powered. Do not apply any excitation voltage to the output of the transmitter.*

11. Verify that the transmitter is configured to match the analog input requirements of the host controller. Press the ESC and ↑ buttons simultaneously to display the transmitter setting for the AOUT parameter. If the AOUT parameter is not correct, press the ENT button and use the ↑ and ↓ buttons to set AOUT. Press the ENT button to execute and display the change. Press the ESC button to return to normal operation.
12. The analog output signal for airflow (AO1) is linear. The minimum scale reading (0% output) of the airflow signal is fixed at 0 and the full scale reading (100% output) is factory set to 5,000 FPM.

Multiply the default full scale velocity (FPM)by the correct area of the measurement location to determine the full-scale or span (CFM) for the B.A.S. to avoid field configuration. EBTRON airflow measurement device accuracy is percent-of-reading. Changing the full scale reading does not affect measurement accuracy.

ⓘ *If custom airflow scaling or unit of measure are required, refer to the Operations and Maintenance Manual.*

13. The analog output signal for temperature (AO2) is linear. The minimum scale reading (0% output) is set to -20 ºF and full scale reading (100% output) is set to 160 ºF.

ⓘ *If custom temperature scaling is required, refer to the Operations and Maintenance Manual.*

ⓘ *AO2 can be configured for a high/low airflow alarm or system status alarm. Refer to the Operations and Maintenance Manual for more information.*

14. The analog output signal (AO3) for the psychrometric property specified is linear. The minimum scale reading (0% output) and full scale reading (100% output) is based on the psychrometric specified by H CONFIG. The factory default ranges for each psychrometric property output are as follows:
    - Relative humidity (H CONFIG = RH): 0 to 100%
    - Enthalpy (H CONFIG = ENTH): 0 to 200 Btu/lb
    - Dew point (H CONFIG = DPT): 0 to 100 ºF

ⓘ *If custom psychrometric property scaling is required, refer to the Operations and Maintenance Manual.*

15. If USB memory device connection is required continue to step 16, otherwise skip to step 24
16. Transmitters with a USB data logger log sensor node data at 5-minute intervals using Universal Time Coordinated (UTC) based on an onboard real-time clock, whenever power is applied to the transmitter. Data files are automatically appended on power-up.

    The comma separated values (.CSV) filenames and file details are as follows:
    - DATAF.CSV - Average airflow and individual sensor node airflow
    - DATAT.CSV - Average temperature and individual sensor node temperature

    If the /H humidity sensor option is provided, the following file is also provided:
    - DATARH.CSV - Relative humidity, enthalpy and dew point

ⓘ *For standard transmitters equipped with EB-Link Bluetooth® low energy interface, the time zone and interval can be modified by the user using EB-Link software.*

17. To insert a USB memory device ("thumb drive") for data logging continue to step 18, otherwise skip to step 21.
18. Install the USB memory device into the USB connector on the option card to start logging data.

It is a good practice to set the transmitter power switch to the "OFF" position before inserting the USB memory device.

19. The USB port must be enabled to log data.
20. Enable the USB WRITE parameter to start logging data. Press the ↑↓ arrow buttons simultaneously to enter the MAIN MENU. The SETTINGS menu is displayed. Press the ENT button to select the top of the SETTINGS submenu category. Press the ↓ button until the USB submenu category is visible. Press the ENT button. The USB WRITE parameter is visible. Press the ENT button and use the ↑↓ buttons to select ON. Press the ENT button to save the selection. Press the ESC button twice to return to normal operation.

ⓘ *Transmitters are shipped with the USB port parameter USB WRITE set to "ON".*

21. To remove the USB memory device and stop data logging continue to step 22, otherwise skip to step 24.
22. Disable the USB WRITE parameter stop logging data. Press the ↑↓ arrow buttons simultaneously to enter the MAIN MENU. The SETTINGS menu is displayed. Press the ENT button to select the top of the SETTINGS submenu category. Press the ↓ button until the USB submenu category is visible. Press the ENT button. The USB WRITE parameter is visible. Press the ENT button and use the ↑↓ buttons to select OFF. Press the ENT button to save the selection. Press the ESC button twice to return to normal operation.

⚠ Always set the USB WRITE parameter to "OFF" before removing the USB memory device to avoid data loss/and or damage.

23. Remove the USB memory device from the USB port, if desired.

It is a good practice to set the transmitter power switch to the "OFF" position before removing the USB memory device.

24. Startup is complete! If additional customization is desired, consult the *Operation and Maintenance Manual*.

VERIFICATION

Many installations require third-party airflow verification. If the airflow measuring device is within the measurement uncertainty of the verification technique, EBTRON strongly recommends that no field adjustment correction is made. EBTRON airflow measurement devices are factory calibrated to NIST traceable standards. Field adjustment is not recommended when installed in accordance to published guidelines.

If field adjustment is required, refer to the *Operation and Maintenance Manual*.

ⓘ *If minimum placement guidelines cannot be achieved, installed accuracy may be compromised. Transmitters can be field adjusted to match a third-party measurement. Adjusted field measurements typically result in comparative readings within ±3% of the third-party measurement. Be advised that the third-party measurement may have uncertainties greater than or equal to ±10% and should only be used to adjust the airflow measurement device if the probes do not meet minimum placement requirements or the discrepancy is greater than the uncertainty of the third-party source.*

NEED MORE HELP?

EBTRON Customer Service

For toll-free factory support call 1-800-2EBTRON (1-800-232-8766), Monday through Thursday 8:00 AM to 4:30 PM and Friday 8:00 AM to 2:00 PM eastern time.

Your Local EBTRON Representative

Visit EBTRON.com for the name and contact information of your local representative.

Advantage IV (A4) GTW116-P STARTUP GUIDE

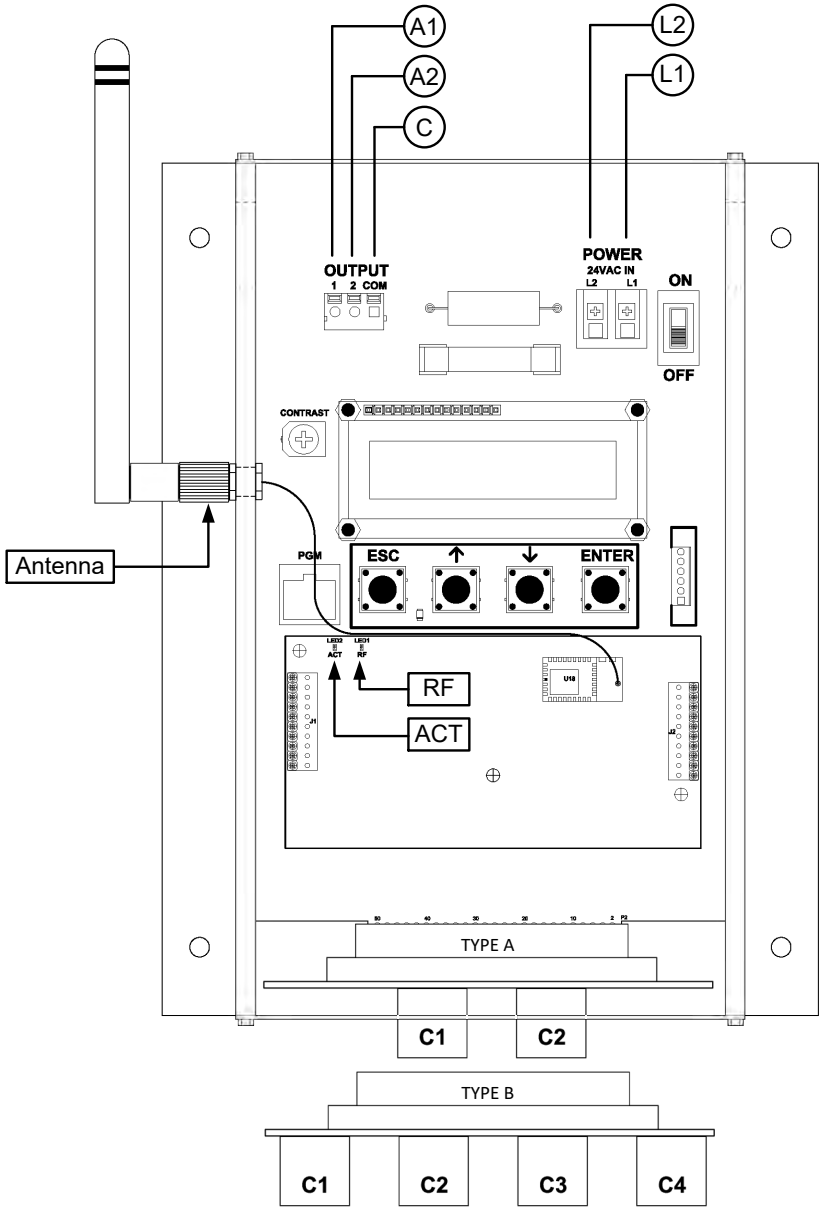

GTW116-P Parameters - Factory Defaults and Optional Settings/Ranges

Description	Parameter	Default	Optional Settings/Ranges	Units
System of Units	SYS	I-P (US customary)	SI (metric)	
Airflow Calculation Method	AIRFLOW	ACT (actual)	STD (standard mass flow)	
Altitude (for actual flow correction)	ALT	0	0 to 20000 [0 to 6000]	ft [m]
Low Limit Airflow Cutoff	LLIMIT	0 FPM	0 to 500 FPM [0.0 to 2.5 m/s]	
Area	AREA	*{Order Area}*	0.00 to 9999.99 [0.000 to 999.999]	sq ft [sq m]
AO1 Type	AOUT1	4-20mA	0-10V, 0-5 V	
AO2 Type	AOUT2	4-20mA	0-10V, 0-5 V	
AO1 Assignment	AO1 ASGN	AF (Airflow)	None	
AO1 Unit of Measure	AO1 UM	FPM [m/s]	CFM [L/s]	
AO1 Minimum Scale Reading	AO1 MS	0	None	FPM [m/s]
AO1 Full Scale Reading	AO1 FS	5000 [25.0]	100 to 15000 [0.5 to 75.0]	FPM [m/s]
AO2 Assignment	AO2 ASGN	TEMP (Temperature)	ALRM (Alarm) or TRBL (System Trouble)	
AO2 Unit of Measure	AO2 UM	F [C]	None	°F [°C]
AO2 Minimum Scale Reading	AO2 MS	-20 [-30]	-50 to 160 [-50 to 70]	°F [°C]
AO2 Full Scale Reading	AO2 FS	160 [70]	-50 to 160 [-50 to 70]	°F [°C]
EBTRON RF-Link	Transmitter must be paired with an EBTRON transceiver prior to use (see below)			

Refer to the O&M Manual for more information and/or additional parameter defaults, settings and ranges.

STARTUP INSTRUCTIONS:

1. Verify that the sensor probes are located where they meet EBTRON published installation guides.
2. Verify that the probes are properly spaced with the airflow arrows pointing in the direction of airflow.

⚠ *Improperly installed probes will compromise the installed accuracy of the device and degrade system performance.*

3. Verify that the transmitter is installed and wired in accordance with the *GTW116-P Wiring Guide* provided with the transmitter and power is provided to the transmitter.
4. Make sure the ductwork is clean and free of debris prior to fan startup.
5. Move the power switch to the "ON" position. Power-up faults, if detected, are displayed on the LCD. If any power up faults are detected, resolve all conflicts or contact EBTRON customer service at 1-800-232-8766 before proceeding..

⚠ *If extension cables have been added, the extension cable length must be entered into the transmitter. Refer to the Operations and Maintenance Manual for more information.*

6. The transmitter is fully functional as a factory calibrated airflow and temperature measurement device in I-P units (ft, FPM, CFM °F). Airflow (CFM) and temperature (°F) are displayed on the LCD.

ⓘ *If SI units are required, refer to the the Operations and Maintenance Manual.*

ⓘ *The factory default airflow output is set to actual airflow (FPM, CFM). If standard (mass) airflow (SFPM, SCFM) is required, refer to the Operations and Maintenance Manual.*

7. Verify that the area on the hang-tag matches the actual area of the duct or opening where the probes are located (less any internal insulation). If the area is different, modify the area parameter stored in the transmitter and use the correct area for any external conversion calculations from FPM to CFM.

⚠ *Failure to use the correct area will result in volumetric airflow (CFM) measurement error and degrade system performance. If the area parameter must be changed, refer to the Operations and Maintenance Manual.*

8. If analog output signals are used continue to step 9, otherwise skip to step 13.

9. Verify that the transmitter is configured to match the analog input requirements of the host controller. The output signal type (mA or VDC) of AO1 and AO2 are determined by switches SW1 (AO1) and SW2 (AO2) on the output card. The transmitter is factory set to 4-20mA. Verify the switches for the proper output signal type.

⚠ *The 4-20mA is "4-wire type" and not loop powered. Do not apply any excitation voltage to the output of the transmitter.*

10. Press the ESC and ↑ buttons simultaneously to display the transmitter setting for the AOUT1 (AO1) parameter. Use the ↓ button to view the setting for the AOUT (AO2) parameter. If the output signal type (mA or VDC) is not correct, position switches SW1 and/or SW2 on the option card board for the appropriate signal type. If VDC is selected and a 0-5V output is required in lieu of 0-10V, use the ↑↓ buttons until AOUT1 is visible. Press the ENT button and use the ↑↓ buttons to select 0-5V. Press the ENT button to execute and display the change. Do the same for AOUT2, if required. Press the ESC button to return to normal operation.
11. The analog output signal for airflow (AO1) is linear. The minimum scale reading (0% output) of the airflow signal is fixed at 0 and the full scale reading (100% output) is factory set to 5,000 FPM.

Multiply the default full scale velocity (FPM)by the correct area of the measurement location to determine the full-scale or span (CFM) for the B.A.S. to avoid field configuration. EBTRON airflow measurement device accuracy is percent-of-reading. Changing the full scale reading does not affect measurement accuracy.

ⓘ *If custom airflow scaling or unit of measure are required, refer to the Operations and Maintenance Manual.*

12. The analog output signal for temperature (AO2) is linear. The minimum scale reading (0% output) is set to -20 ºF and full scale reading (100% output) is set to 160 ºF.

ⓘ *If custom temperature scaling is required, refer to the Operations and Maintenance Manual.*

ⓘ *AO2 can be configured for a high/low airflow alarm or system status alarm. Refer to the Operations and Maintenance Manual for more information.*

13. The RF-Link connects the transmitter to an EBTRON Commissioner or other RF-Link compatible EBTRON master transceiver. The transmitter and transceiver must be paired prior to use. If the RF-Link connection is required continue to step 14, otherwise skip to step 17.
14. Turn on the appropriate EBTRON master transceiver.
15. Following the directions provided with the transceiver, set the transceiver to the "ADD DEVICE" mode.

⚠ *Do not have multiple master transceivers in the "ADD DEVICE" mode at the same time.*

16. Press the ↑↓ arrow buttons simultaneously to enter the MAIN MENU. The SETTINGS menu is displayed. Press the ENT button to select the top of the SETTINGS submenu category. Press the ↓ button until the RF-LINK submenu category is visible. Press the ENT button to enter the RF-Link submenu. RFLINK COM is visible. Press the ENT button and set the RFLINK COM parameter to ON using the ↑↓ buttons. Press the ENT button to initiate pairing. The transmitter displays "CONNECTING" during pairing. When the connection is made "CONNECTED" is displayed. If the connection fails "CON FAILED" is displayed. Press ENT to return to submenu prompt for RFLINK COM. If the connection was successful, *RFLINK COM=ON is displayed. Press the ESC button twice to return to normal operation.
17. Startup is complete! If additional customization is desired, consult the *Operation and Maintenance Manual*.

VERIFICATION

Many installations require third-party airflow verification. If the airflow measuring device is within the measurement uncertainty of the verification technique, EBTRON strongly recommends that no field adjustment correction is made. EBTRON airflow measurement devices are factory calibrated to NIST traceable standards. Field adjustment is not recommended when installed in accordance to published guidelines.

If field adjustment is required, refer to the *Operation and Maintenance Manual*.

ⓘ *If minimum placement guidelines cannot be achieved, installed accuracy may be compromised. Transmitters can be field adjusted to match a third-party measurement. Adjusted field measurements typically result in comparative readings within ±3% of the third-party measurement. Be advised that the third-party measurement may have uncertainties greater than or equal to ±10% and should only be used to adjust the airflow measurement device if the probes do not meet minimum placement requirements or the discrepancy is greater than the uncertainty of the third-party source.*

FOR MORE INFORMATION ….

Operations and Maintenance Manual.

The *Operations and Maintenance Manual* is a comprehensive reference document that contains information on installation, startup, custom configuration, built-in tools, diagnostics, troubleshooting and maintenance.

NEED MORE HELP?

EBTRON Customer Service

For toll-free factory support call 1-800-2EBTRON (1-800-232-8766), Monday through Thursday 8:00 AM to 4:30 PM and Friday 8:00 AM to 2:00 PM eastern time.

Your Local EBTRON Representative

Visit EBTRON.com for the name and contact information of your local representative.

Advantage IV (A4) HTA104-P STARTUP GUIDE

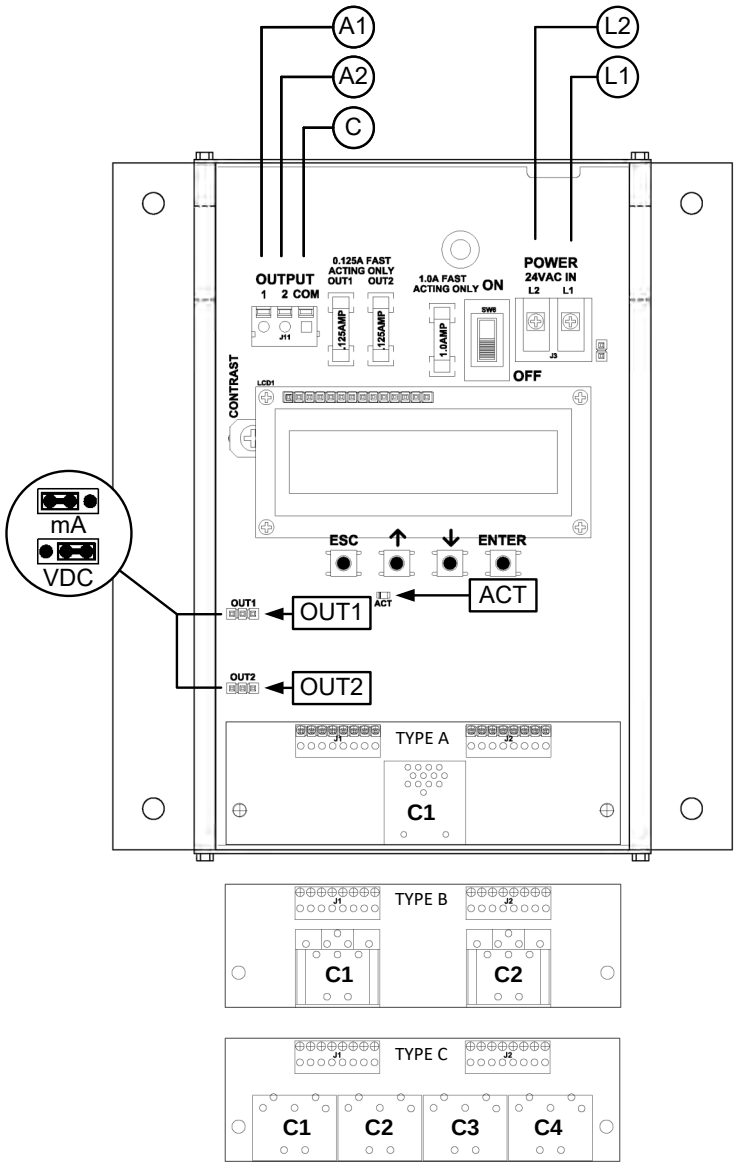

HTA104-P Parameters - Factory Defaults and Optional Settings/Ranges

Description	Parameter	Default	Optional Settings/Ranges	Units
System of Units	SYS	I-P (US customary)	SI (metric)	
Airflow Calculation Method	AIRFLOW	ACT (actual)	STD (standard mass flow)	
Altitude (for actual flow correction)	ALT	0	0 to 20000 [0 to 6000]	ft [m]
Low Limit Airflow Cutoff	LLIMIT	0 FPM	0 to 500 FPM [0.0 to 2.5 m/s]	
Area	AREA	*{Order Area}*	0.00 to 9999.99 [0.000 to 999.999]	sq ft [sq m]
AO1 Type	AOUT1	4-20mA	0-10V, 0-5 V	
AO2 Type	AOUT2	4-20mA	0-10V, 0-5 V	
AO1 Assignment	AO1 ASGN	AF (Airflow)	None	
AO1 Unit of Measure	AO1 UM	FPM [m/s]	CFM [L/s]	
AO1 Minimum Scale Reading	AO1 MS	0	None	FPM [m/s]
AO1 Full Scale Reading	AO1 FS	5000 [25.0]	100 to 15000 [0.5 to 75.0]	FPM [m/s]
AO2 Assignment	AO2 ASGN	TEMP (Temperature)	ALRM (Alarm) or TRBL (System Trouble)	
AO2 Unit of Measure	AO2 UM	F [C]	None	°F [°C]
AO2 Minimum Scale Reading	AO2 MS	-20 [-30]	-50 to 160 [-50 to 70]	°F [°C]
AO2 Full Scale Reading	AO2 FS	160 [70]	-50 to 160 [-50 to 70]	°F [°C]

Refer to the O&M Manual for more information and/or additional parameter defaults, settings and ranges.

STARTUP INSTRUCTIONS:

1. Verify that the sensor probes are located where they meet EBTRON published installation guides.
2. Verify that the probes are properly spaced with the airflow arrows pointing in the direction of airflow.

⚠ *Improperly installed probes will compromise the installed accuracy of the device and degrade system performance.*

3. Verify that the transmitter is installed and wired in accordance with the *HTA104-P Wiring Guide* provided with the transmitter and power is provided to the transmitter.
4. Make sure the ductwork is clean and free of debris prior to fan startup.
5. Move the power switch to the "ON" position. Power-up faults, if detected, are displayed on the LCD. If any power up faults are detected, resolve all conflicts or contact EBTRON customer service at 1-800-232-8766 before proceeding..

⚠ *If extension cables have been added, the extension cable length must be entered into the transmitter. Refer to the Operations and Maintenance Manual for more information.*

6. The transmitter is fully functional as a factory calibrated airflow and temperature measurement device in I-P units (ft, FPM, CFM °F). Airflow (CFM) and temperature (°F) are displayed on the LCD.

ⓘ *If SI units are required, refer to the the Operations and Maintenance Manual.*

ⓘ *The factory default airflow output is set to actual airflow (FPM, CFM). If standard (mass) airflow (SFPM, SCFM) is required, refer to the Operations and Maintenance Manual.*

7. Verify that the area on the hang-tag matches the actual area of the duct or opening where the probes are located (less any internal insulation). If the area is different, modify the area parameter stored in the transmitter and use the correct area for any external conversion calculations from FPM to CFM.

⚠ *Failure to use the correct area will result in volumetric airflow (CFM) measurement error and degrade system performance. If the area parameter must be changed, refer to the Operations and Maintenance Manual.*

8. If analog output signals are used continue to step 9, otherwise skip to step 14.
9. The output signal type and range (4-20 mA, 0-5 VDC or 0-10 VDC) of AO1 and AO2 is determined by the AOUT parameter and the position of the output jumpers located on the left side of the PCB. Position the jumpers (AOUT1 for AO1 and AOUT2 for AO2) to "mA" if a 4-20 mA signal is required or "VDC" if a 0-5 or 0-10 VDC signal is required. The transmitter is factory set to 4-20mA (i.e. AOUT=4-20mA and both jumpers are set to "mA").

⚠ *The 4-20mA is "4-wire type" and not loop powered. Do not apply any excitation voltage to the output of the transmitter.*

10. Verify that the transmitter is configured to match the analog input requirements of the host controller. Press the ESC and ↑ buttons simultaneously to display the transmitter setting for the AOUT parameter. If the output signal type and range is not correct, use the ↑ and ↓ buttons to display the proper output signal type and range and press the ENT button to execute the change.
11. Verify that jumpers AOUT1 and AOUT2 are set to "mA" if the AOUT parameter is set to "4-20mA" or "VDC" if the AOUT parameter is set to "0-5V" or "0-10V".
12. The analog output signal for airflow (AO1) is linear. The minimum scale reading (0% output) of the airflow signal is fixed at 0 and the full scale reading (100% output) is factory set to 5,000 FPM.

Multiply the default full scale velocity (FPM)by the correct area of the measurement location to determine the full-scale or span (CFM) for the B.A.S. to avoid field configuration. EBTRON airflow measurement device accuracy is percent-of-reading. Changing the full scale reading does not affect measurement accuracy.

ⓘ *If custom airflow scaling or unit of measure are required, refer to the Operations and Maintenance Manual.*

13. The analog output signal for temperature (AO2) is linear. The minimum scale reading (0% output) is set to –20 ºF and full scale reading (100% output) is set to 160 ºF.

ⓘ *If custom temperature scaling is required, refer to the Operations and Maintenance Manual.*

ⓘ *AO2 can be configured for a high/low airflow alarm or system status alarm. Refer to the Operations and Maintenance Manual for more information.*

14. Startup is complete! If additional customization is desired, consult the *Operation and Maintenance Manual*.

VERIFICATION

Many installations require third-party airflow verification. If the airflow measuring device is within the measurement uncertainty of the verification technique, EBTRON strongly recommends that no field adjustment correction is made. EBTRON airflow measurement devices are factory calibrated to NIST traceable standards. Field adjustment is not recommended when installed in accordance to published guidelines.

If field adjustment is required, refer to the *Operation and Maintenance Manual*.

ⓘ *If minimum placement guidelines cannot be achieved, installed accuracy may be compromised. Transmitters can be field adjusted to match a third-party measurement. Adjusted field measurements typically result in comparative readings within ±3% of the third-party measurement. Be advised that the third-party measurement may have uncertainties greater than or equal to ±10% and should only be used to adjust the airflow measurement device if the probes do not meet minimum placement requirements or the discrepancy is greater than the uncertainty of the third-party source.*

FOR MORE INFORMATION ….

Operations and Maintenance Manual.

The *Operations and Maintenance Manual* is a comprehensive reference document that contains information on installation, startup, custom configuration, built-in tools, diagnostics, troubleshooting and maintenance.

NEED MORE HELP?

EBTRON Customer Service

For toll-free factory support call 1-800-2EBTRON (1-800-232-8766), Monday through Thursday 8:00 AM to 4:30 PM and Friday 8:00 AM to 2:00 PM eastern time.

Your Local EBTRON Representative

Visit EBTRON.com for the name and contact information of your local representative.

Advantage IV (A4) HTN104-P STARTUP GUIDE

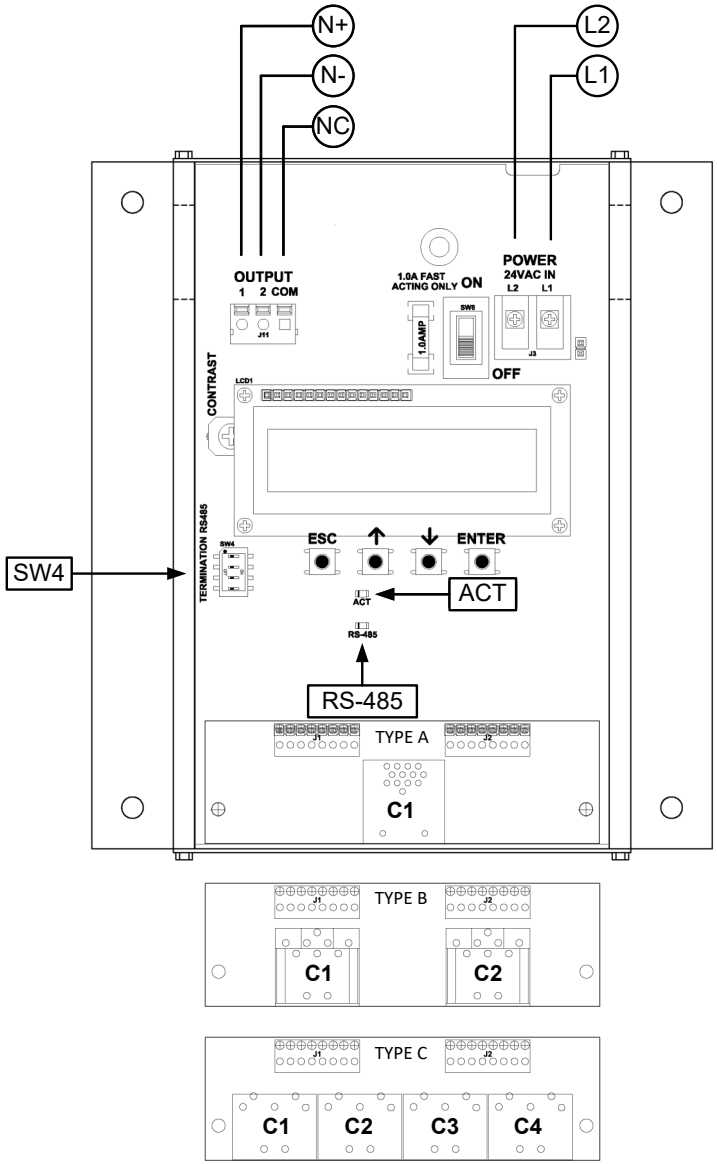

HTN104-P Parameters - Factory Defaults and Optional Settings/Ranges

Description	Parameter	Default	Optional Settings/Ranges	Units
System of Units	SYS	I-P (US customary)	SI (metric)	
Airflow Calculation Method	AIRFLOW	ACT (actual)	STD (standard mass flow)	
Altitude (for actual flow correction)	ALT	0	0 to 20000 [0 to 6000]	ft [m]
Low Limit Airflow Cutoff	LLIMIT	0 FPM	0 to 500 FPM [0.0 to 2.5 m/s]	
Area	AREA	*{Order Area}*	0.00 to 9999.99 [0.000 to 999.999]	sq ft [sq m]
RS-485 Network	BACnet MS/TP or Modbus RTU (requires configuration)			

Refer to the O&M Manual for more information and/or additional parameter defaults, settings and ranges.

STARTUP INSTRUCTIONS:

1. Verify that the sensor probes are located where they meet EBTRON published installation guides.
2. Verify that the probes are properly spaced with the airflow arrows pointing in the direction of airflow.

⚠ *Improperly installed probes will compromise the installed accuracy of the device and degrade system performance.*

3. Verify that the transmitter is installed and wired in accordance with the *HTN104-P Wiring Guide* provided with the transmitter and power is provided to the transmitter.
4. Make sure the ductwork is clean and free of debris prior to fan startup.
5. Move the power switch to the "ON" position. Power-up faults, if detected, are displayed on the LCD. If any power up faults are detected, resolve all conflicts or contact EBTRON customer service at 1-800-232-8766 before proceeding..

⚠ *If extension cables have been added, the extension cable length must be entered into the transmitter. Refer to the Operations and Maintenance Manual for more information.*

6. The transmitter is fully functional as a factory calibrated airflow and temperature measurement device in I-P units (ft, FPM, CFM °F). Airflow (CFM) and temperature (°F) are displayed on the LCD.

ⓘ *If SI units are required, refer to the the Operations and Maintenance Manual.*

ⓘ *The factory default airflow output is set to actual airflow (FPM, CFM). If standard (mass) airflow (SFPM, SCFM) is required, refer to the Operations and Maintenance Manual.*

7. Verify that the area on the hang-tag matches the actual area of the duct or opening where the probes are located (less any internal insulation). If the area is different, modify the area parameter stored in the transmitter and use the correct area for any external conversion calculations from FPM to CFM.

⚠ *Failure to use the correct area will result in volumetric airflow (CFM) measurement error and degrade system performance. If the area parameter must be changed, refer to the Operations and Maintenance Manual.*

8. If the RS-485 network connection is required continue to step 9, otherwise skip to step 11.
9. Press the ↑↓ arrow buttons simultaneously to enter the MAIN MENU. The SETTINGS menu is displayed. Press the ENT button to select the top of the SETTINGS submenu category. Press the ↓ button until the RS-485 submenu category is visible. Press the ENT button again to enter the RS-485 submenu. Set the NET OUT parameter for BACnet (MS/TP) or Modbus (RTU) and continue through the RS-485 submenu to configure the remaining network parameters. Enable network communications by setting the RS485 COM parameter to "ON". Refer to the *Operations and Maintenance Manual* for more information.

10. Refer to the *A4 Operations and Maintenance Manual* for detailed information on the BACnet Objects and Modbus Registers supported by this device.
11. Startup is complete! If additional customization is desired, consult the *Operation and Maintenance Manual*.

VERIFICATION

Many installations require third-party airflow verification. If the airflow measuring device is within the measurement uncertainty of the verification technique, EBTRON strongly recommends that no field adjustment correction is made. EBTRON airflow measurement devices are factory calibrated to NIST traceable standards. Field adjustment is not recommended when installed in accordance to published guidelines.

If field adjustment is required, refer to the *Operation and Maintenance Manual*.

ⓘ *If minimum placement guidelines cannot be achieved, installed accuracy may be compromised. Transmitters can be field adjusted to match a third-party measurement. Adjusted field measurements typically result in comparative readings within ±3% of the third-party measurement. Be advised that the third-party measurement may have uncertainties greater than or equal to ±10% and should only be used to adjust the airflow measurement device if the probes do not meet minimum placement requirements or the discrepancy is greater than the uncertainty of the third-party source.*

FOR MORE INFORMATION ….

Operations and Maintenance Manual.

The *Operations and Maintenance Manual* is a comprehensive reference document that contains information on installation, startup, custom configuration, built-in tools, diagnostics, troubleshooting and maintenance.

NEED MORE HELP?

EBTRON Customer Service

For toll-free factory support call 1-800-2EBTRON (1-800-232-8766), Monday through Thursday 8:00 AM to 4:30 PM and Friday 8:00 AM to 2:00 PM eastern time.

Your Local EBTRON Representative

Visit EBTRON.com for the name and contact information of your local representative.

Advantage IV (A4) HTA104-T STARTUP GUIDE

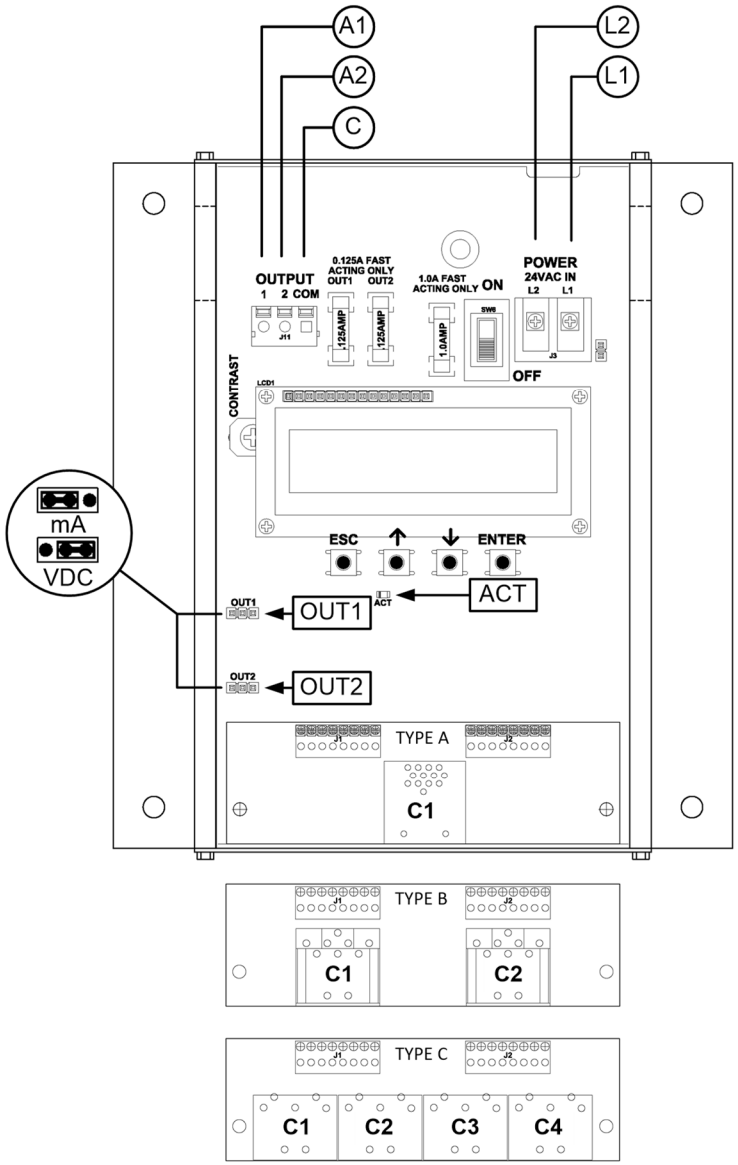

HTA104-T Parameters - Factory Defaults and Optional Settings/Ranges

Description	Parameter	Default	Optional Settings/Ranges	Units
System of Units	SYS	I-P (US customary)	SI (metric)	
Airflow Calculation Method	AIRFLOW	ACT (actual)	STD (standard mass flow)	
Altitude (for actual flow correction)	ALT	0	0 to 20000 [0 to 6000]	ft [m]
Low Limit Airflow Cutoff	LLIMIT	0 FPM	0 to 500 FPM [0.0 to 2.5 m/s]	
Area	AREA	*{Order Area}*	0.00 to 9999.99 [0.000 to 999.999]	sq ft [sq m]
AO1 Type	AOUT1	4-20mA	0-10V, 0-5 V	
AO2 Type	AOUT2	4-20mA	0-10V, 0-5 V	
AO1 Assignment	AO1 ASGN	AF (Airflow)	None	
AO1 Unit of Measure	AO1 UM	FPM [m/s]	CFM [L/s]	
AO1 Minimum Scale Reading	AO1 MS	0	None	FPM [m/s]
AO1 Full Scale Reading	AO1 FS	3000 [15.0]	100 to 15000 [0.5 to 75.0]	FPM [m/s]
AO2 Assignment	AO2 ASGN	TEMP (Temperature)	ALRM (Alarm) or TRBL (System Trouble)	
AO2 Unit of Measure	AO2 UM	F [C]	None	°F [°C]
AO2 Minimum Scale Reading	AO2 MS	-20 [-30]	-50 to 160 [-50 to 70]	°F [°C]
AO2 Full Scale Reading	AO2 FS	160 [70]	-50 to 160 [-50 to 70]	°F [°C]

Refer to the O&M Manual for more information and/or additional parameter defaults, settings and ranges.

STARTUP INSTRUCTIONS:

1. Verify that the sensor probe is located where they meet EBTRON published installation guides.
2. Verify that the probe is properly installed with the airflow arrow pointing in the direction of airflow.

⚠ *Improperly installed probes will compromise the installed accuracy of the device and degrade system performance.*

3. Verify that the transmitter is installed and wired in accordance with the *HTA104-T Wiring Guide* provided with the transmitter and power is provided to the transmitter.
4. Make sure the ductwork is clean and free of debris prior to fan startup.
5. Move the power switch to the "ON" position. Power-up faults, if detected, are displayed on the LCD. If any power up faults are detected, resolve all conflicts or contact EBTRON customer service at 1-800-232-8766 before proceeding..

⚠ *If extension cables have been added, the extension cable length must be entered into the transmitter. Refer to the Operations and Maintenance Manual for more information.*

6. The transmitter is fully functional as a factory calibrated airflow and temperature measurement device in I-P units (ft, FPM, CFM °F). Airflow (CFM) and temperature (°F) are displayed on the LCD.

ⓘ *If SI units are required, refer to the Operations and Maintenance Manual.*

ⓘ *The factory default airflow output is set to actual airflow (FPM, CFM). If standard (mass) airflow (SFPM, SCFM) is required, refer to the Operations and Maintenance Manual.*

7. Verify that the area on the hang-tag matches the actual area of the duct or opening where the probes are located (less any internal insulation). If the area is different, modify the area parameter stored in the transmitter and use the correct area for any external conversion calculations from FPM to CFM.

⚠ *Failure to use the correct area will result in volumetric airflow (CFM) measurement error and degrade*

system performance. If the area parameter must be changed, refer to the Operations and Maintenance Manual.

8. If analog output signals are used continue to step 9, otherwise skip to step 14.
9. The output signal type and range (4-20 mA, 0-5 VDC or 0-10 VDC) of AO1 and AO2 is determined by the AOUT parameter and the position of the output jumpers located on the left side of the PCB. Position the jumpers (AOUT1 for AO1 and AOUT2 for AO2) to "mA" if a 4-20 mA signal is required or "VDC" if a 0-5 or 0-10 VDC signal is required. The transmitter is factory set to 4-20mA (i.e. AOUT=4-20mA and both jumpers are set to "mA").

⚠ *The 4-20mA is "4-wire type" and not loop powered. Do not apply any excitation voltage to the output of the transmitter.*

10. Verify that the transmitter is configured to match the analog input requirements of the host controller. Press the ESC and ↑ buttons simultaneously to display the transmitter setting for the AOUT parameter. If the output signal type and range is not correct, use the ↑ and ↓ buttons to display the proper output signal type and range and press the ENT button to execute the change.
11. Verify that jumpers AOUT1 and AOUT2 are set to "mA" if the AOUT parameter is set to "4-20mA" or "VDC" if the AOUT parameter is set to "0-5V" or "0-10V".
12. The analog output signal for airflow (AO1) is linear. The minimum scale reading (0% output) of the airflow signal is fixed at 0 and the full scale reading (100% output) is factory set to 3,000 FPM.

Multiply the default full scale velocity (FPM)by the correct area of the measurement location to determine the full-scale or span (CFM) for the B.A.S. to avoid field configuration. EBTRON airflow measurement device accuracy is percent-of-reading. Changing the full scale reading does not affect measurement accuracy.

ⓘ *If custom airflow scaling or unit of measure are required, refer to the Operations and Maintenance Manual.*

13. The analog output signal for temperature (AO2) is linear. The minimum scale reading (0% output) is set to –20 ºF and full scale reading (100% output) is set to 160 ºF.

ⓘ *If custom temperature scaling is required, refer to the Operations and Maintenance Manual.*

ⓘ *AO2 can be configured for a high/low airflow alarm or system status alarm. Refer to the Operations and Maintenance Manual for more information.*

14. Startup is complete! If additional customization is desired, consult the *Operation and Maintenance Manual*.

VERIFICATION

Many installations require third-party airflow verification. If the airflow measuring device is within the measurement uncertainty of the verification technique, EBTRON strongly recommends that no field adjustment correction is made. EBTRON airflow measurement devices are factory calibrated to NIST traceable standards. Field adjustment is not recommended when installed in accordance to published guidelines.

If field adjustment is required, refer to the *Operation and Maintenance Manual*.

ⓘ *If minimum placement guidelines cannot be achieved, installed accuracy may be compromised. Transmitters can be field adjusted to match a third-party measurement. Adjusted field measurements typically result in comparative readings within ±3% of the third-party measurement. Be advised that the third-party measurement may have uncertainties greater than or equal to ±10% and should only be used to adjust the airflow measurement device if the probes do not meet minimum placement requirements or the discrepancy is greater than the uncertainty of the third-party source.*

FOR MORE INFORMATION ….

Operations and Maintenance Manual.

The *Operations and Maintenance Manual* is a comprehensive reference document that contains information on installation, startup, custom configuration, built-in tools, diagnostics, troubleshooting and maintenance.

NEED MORE HELP?

EBTRON Customer Service

For toll-free factory support call 1-800-2EBTRON (1-800-232-8766), Monday through Thursday 8:00 AM to 4:30 PM and Friday 8:00 AM to 2:00 PM eastern time.

Your Local EBTRON Representative

Visit EBTRON.com for the name and contact information of your local representative.

Advantage IV (A4) HTN104-T STARTUP GUIDE

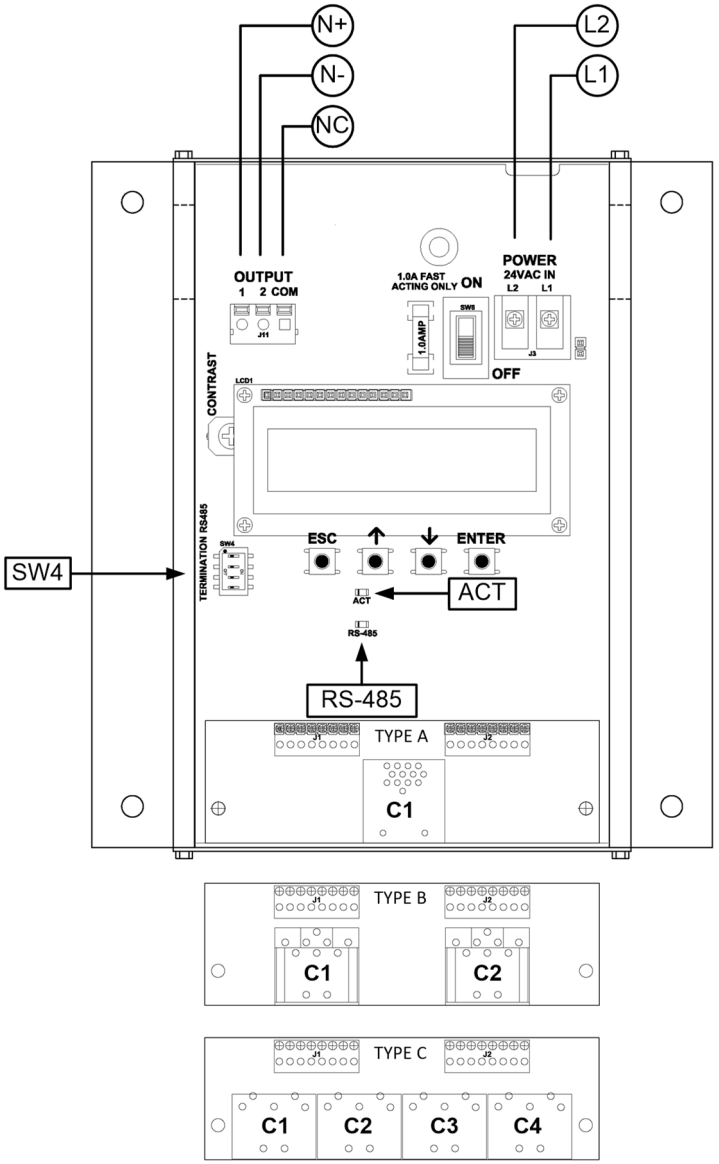

HTN104-T Parameters - Factory Defaults and Optional Settings/Ranges

Description	Parameter	Default	Optional Settings/Ranges	Units
System of Units	SYS	I-P (US customary)	SI (metric)	
Airflow Calculation Method	AIRFLOW	ACT (actual)	STD (standard mass flow)	
Altitude (for actual flow correction)	ALT	0	0 to 20000 [0 to 6000]	ft [m]
Low Limit Airflow Cutoff	LLIMIT	0 FPM	0 to 500 FPM [0.0 to 2.5 m/s]	
Area	AREA	*{Order Area}*	0.00 to 9999.99 [0.000 to 999.999]	sq ft [sq m]
RS-485 Network	BACnet MS/TP or Modbus RTU (requires configuration)			

Refer to the O&M Manual for more information and/or additional parameter defaults, settings and ranges.

STARTUP INSTRUCTIONS:

1. Verify that the sensor probe is located where they meet EBTRON published installation guides.
2. Verify that the probe is properly installed with the airflow arrow pointing in the direction of airflow.

⚠ *Improperly installed probes will compromise the installed accuracy of the device and degrade system performance.*

3. Verify that the transmitter is installed and wired in accordance with the *HTN104-T Wiring Guide* provided with the transmitter and power is provided to the transmitter.
4. Make sure the ductwork is clean and free of debris prior to fan startup.
5. Move the power switch to the "ON" position. Power-up faults, if detected, are displayed on the LCD. If any power up faults are detected, resolve all conflicts or contact EBTRON customer service at 1-800-232-8766 before proceeding..

⚠ *If extension cables have been added, the extension cable length must be entered into the transmitter. Refer to the Operations and Maintenance Manual for more information.*

6. The transmitter is fully functional as a factory calibrated airflow and temperature measurement device in I-P units (ft, FPM, CFM °F). Airflow (CFM) and temperature (°F) are displayed on the LCD.

ⓘ *If SI units are required, refer to the Operations and Maintenance Manual.*

ⓘ *The factory default airflow output is set to actual airflow (FPM, CFM). If standard (mass) airflow (SFPM, SCFM) is required, refer to the Operations and Maintenance Manual.*

7. Verify that the area on the hang-tag matches the actual area of the duct or opening where the probes are located (less any internal insulation). If the area is different, modify the area parameter stored in the transmitter and use the correct area for any external conversion calculations from FPM to CFM.

⚠ *Failure to use the correct area will result in volumetric airflow (CFM) measurement error and degrade system performance. If the area parameter must be changed, refer to the Operations and Maintenance Manual.*

8. If the RS-485 network connection is required continue to step 9, otherwise skip to step 11.
9. Press the ↑↓ arrow buttons simultaneously to enter the MAIN MENU. The SETTINGS menu is displayed. Press the ENT button to select the top of the SETTINGS submenu category. Press the ↓ button until the RS-485 submenu category is visible. Press the ENT button again to enter the RS-485 submenu. Set the NET OUT parameter for BACnet (MS/TP) or Modbus (RTU) and continue through the RS-485 submenu to configure the remaining network parameters. Enable network communications by setting the RS485 COM parameter to "ON". Refer to the *Operations and Maintenance Manual* for more information.

10. Refer to the *Operations and Maintenance Manual* for detailed information on the BACnet Objects and Modbus Registers supported by this device.
11. Startup is complete! If additional customization is desired, consult the *Operation and Maintenance Manual*.

VERIFICATION

Many installations require third-party airflow verification. If the airflow measuring device is within the measurement uncertainty of the verification technique, EBTRON strongly recommends that no field adjustment correction is made. EBTRON airflow measurement devices are factory calibrated to NIST traceable standards. Field adjustment is not recommended when installed in accordance to published guidelines.

If field adjustment is required, refer to the *Operation and Maintenance Manual*.

ⓘ *If minimum placement guidelines cannot be achieved, installed accuracy may be compromised. Transmitters can be field adjusted to match a third-party measurement. Adjusted field measurements typically result in comparative readings within ±3% of the third-party measurement. Be advised that the third-party measurement may have uncertainties greater than or equal to ±10% and should only be used to adjust the airflow measurement device if the probes do not meet minimum placement requirements or the discrepancy is greater than the uncertainty of the third-party source.*

FOR MORE INFORMATION ….

Operations and Maintenance Manual.

The *Operations and Maintenance Manual* is a comprehensive reference document that contains information on installation, startup, custom configuration, built-in tools, diagnostics, troubleshooting and maintenance.

NEED MORE HELP?

EBTRON Customer Service

For toll-free factory support call 1-800-2EBTRON (1-800-232-8766), Monday through Thursday 8:00 AM to 4:30 PM and Friday 8:00 AM to 2:00 PM eastern time.

Your Local EBTRON Representative

Visit EBTRON.com for the name and contact information of your local representative.

EB-Flowll EF-A2000-T STARTUP GUIDE

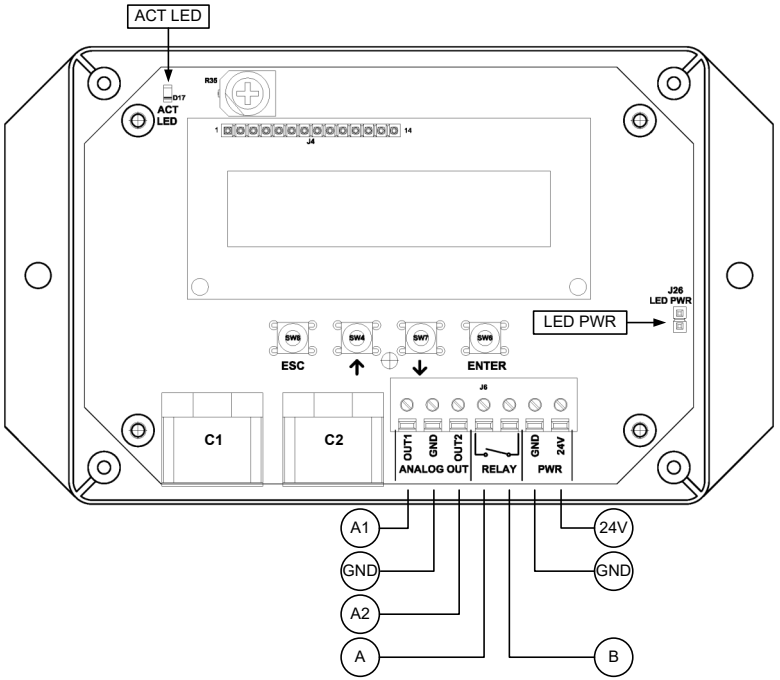

EF-A2000-T Parameters - Factory Defaults and Optional Settings/Ranges

Description	Parameter	Default	Optional Settings/Ranges	Units
System of Units	SYS	I-P (US customary)	SI (metric)	
Airflow Calculation Method	AIRFLOW	ACT (actual)	STD (standard mass flow)	
Altitude (for actual flow correction)	ALT	0	0 to 20000 [0 to 6000]	ft [m]
Low Limit Airflow Cutoff	LLIMIT	0 FPM	0 to 500 FPM [0.0 to 2.5 m/s]	
Area	AREA	*{Order Area}*	0.00 to 9999.99 [0.000 to 999.999]	sq ft [sq m]
AO1 and AO2 Type	AOUT	2-10V	0-10V, 0-5 V	
AO1 Assignment	AO1 ASGN	AF (Airflow)	None	
AO1 Unit of Measure	AO1 UM	FPM [m/s]	CFM [L/s]	
AO1 Minimum Scale Reading	AO1 MS	0	None	FPM [m/s]
AO1 Full Scale Reading	AO1 FS	3000 [15.0]	100 to 15000 [0.5 to 75.0]	FPM [m/s]
AO2 Assignment	AO2 ASGN	TEMP (Temperature)	ALRM (Alarm) or TRBL (System Trouble)	
AO2 Unit of Measure	AO2 UM	F [C]	None	°F [°C]
AO2 Minimum Scale Reading	AO2 MS	-20 [-30]	-50 to 160 [-50 to 70]	°F [°C]
AO2 Full Scale Reading	AO2 FS	160 [70]	-50 to 160 [-50 to 70]	°F [°C]

Refer to the O&M Manual for more information and/or additional parameter defaults, settings and ranges.

STARTUP INSTRUCTIONS:

1. Verify that the sensor probes are located where they meet EBTRON published installation guides.
2. Verify that the probes are properly spaced with the airflow arrows pointing in the direction of airflow.

⚠ *Improperly installed probes will compromise the installed accuracy of the device and degrade system performance.*

3. Verify that the transmitter is installed and wired in accordance with the *EF-A2000-T Wiring Guide* provided with the transmitter and power is provided to the transmitter.
4. Make sure the ductwork is clean and free of debris prior to fan startup.
5. Energize power to the transformer. Power-up faults, if detected, are displayed on the LCD. If any power up faults are detected, resolve all conflicts or contact EBTRON customer service at 1-800-232-8766 before proceeding..

⚠ *If extension cables have been added, the extension cable length must be entered into the transmitter. Refer to the Operations and Maintenance Manual for more information.*

6. The transmitter is fully functional as a factory calibrated airflow and temperature measurement device in I-P units (ft, FPM, CFM °F). Airflow (CFM) and temperature (°F) are displayed on the LCD.

ⓘ *If SI units are required, refer to the the Operations and Maintenance Manual.*

ⓘ *The factory default airflow output is set to actual airflow (FPM, CFM). If standard (mass) airflow (SFPM, SCFM) is required, refer to the Operations and Maintenance Manual.*

7. Verify that the area on the hang-tag matches the actual area of the duct or opening where the probes are located (less any internal insulation). If the area is different, modify the area parameter stored in the transmitter and use the correct area for any external conversion calculations from FPM to CFM.

⚠ *Failure to use the correct area will result in volumetric airflow (CFM) measurement error and degrade system performance. If the area parameter must be changed, refer to the Operations and Maintenance Manual.*

8. If analog output signals are used continue to step 9, otherwise skip to step 13.
9. The output signal type and range (2-10 VDC, 0-5 VDC or 0-10 VDC) of AO1 and AO2 is determined by the AOUT parameter. The transmitter is factory set to 2-10V (i.e. AOUT=2-10V).

ⓘ *The VDC output circuit can drive the input circuit of devices designed to measure 4-wire current loops with a resistive load ≥250 ohms.*

⚠ *Do not apply any excitation voltage to the output of the transmitter.*

10. Verify that the transmitter is configured to match the analog input requirements of the host controller. Press the ESC and ↑ buttons simultaneously to display the transmitter setting for the AOUT parameter. If the AOUT parameter is not correct, press the ENT button and use the ↑ and ↓ buttons to set AOUT. Press the ENT button to execute and display the change. Press the ESC button to return to normal operation.
11. The analog output signal for airflow (AO1) is linear. The minimum scale reading (0% output) of the airflow signal is fixed at 0 and the full scale reading (100% output) is factory set to 3,000 FPM.

Multiply the default full scale velocity (FPM)by the correct total area (i.e. AREA parameter) of the measurement location to determine the full-scale or span (CFM) for the B.A.S. to avoid additional field configuration. EBTRON airflow measurement device accuracy is percent-of-reading. Changing the full scale reading does not affect measurement accuracy.

ⓘ *If custom airflow scaling or unit of measure are required, refer to the Operations and Maintenance Manual.*

12. The analog output signal for temperature (AO2) is linear. The minimum scale reading (0% output) is set to -20 ºF and full scale reading (100% output) is set to 160 ºF.

ⓘ *If custom temperature scaling is required, refer to the Operations and Maintenance Manual.*

ⓘ *AO2 can be configured for a high/low airflow alarm or system status alarm. Refer to the Operations and Maintenance Manual for more information.*

13. If contact closure alarming is required continue to step 14, otherwise skip to step 16.
14. The contact closure relay can be assigned to the high/low airflow alarm or system status alarm. Refer to the *Operations and Maintenance Manual* for more information on configuring the high/low airflow alarm..
15. Press the ↑↓ arrow buttons simultaneously to enter the MAIN MENU. The SETTINGS menu is displayed. Press the ENT button to select the top of the SETTINGS submenu category. Press the ↓ button until the RELAY submenu category is visible. Press the ENT button to enter the RELAY submenu. The R1ASGN parameter is visible. Press the ENT button and set the R1 ASGN parameter to ALRM (high/low airflow alarm) or TRBL (System Status Alarm) using the ↑↓ buttons. Press the ENT button to save the selection. The default state for the relay is normally open (N.O.). If N.O. is required, press the ESC button twice to return to normal operation. If N.C. is required, press the ↓ button until the R1 STATUS parameter is visible. Press the ENT button and set the R1 STATUS parameter to NC using the ↑↓ buttons. Press the ENT button to save the selection. Press the ESC button twice to return to normal operation.
16. Startup is complete! If additional customization is desired, consult the *Operation and Maintenance Manual*.

VERIFICATION

Many installations require third-party airflow verification. If the airflow measuring device is within the measurement uncertainty of the verification technique, EBTRON strongly recommends that no field adjustment correction is made. EBTRON airflow measurement devices are factory calibrated to NIST traceable standards. Field adjustment is not recommended when installed in accordance to published guidelines.

If field adjustment is required, refer to the *Operation and Maintenance Manual*.

ⓘ *Transmitters can be field adjusted to match a third-party measurement. Adjusted field measurements typically result in comparative readings within ±3% of the third-party measurement. Be advised that the third-party measurement may have uncertainties greater than or equal to ±10% and should only be used to adjust the airflow measurement if the discrepancy is greater than the uncertainty of the third-party source.*

FOR MORE INFORMATION ….

Operations and Maintenance Manual.

The *Operations and Maintenance Manual* is a comprehensive reference document that contains information on installation, startup, custom configuration, built-in tools, diagnostics, troubleshooting and maintenance.

NEED MORE HELP?

EBTRON Customer Service

For toll-free factory support call 1-800-2EBTRON (1-800-232-8766), Monday through Thursday 8:00 AM to 4:30 PM and Friday 8:00 AM to 2:00 PM eastern time.

Your Local EBTRON Representative

Visit EBTRON.com for the name and contact information of your local representative.

EB-FlowII EF-N2000-T STARTUP GUIDE

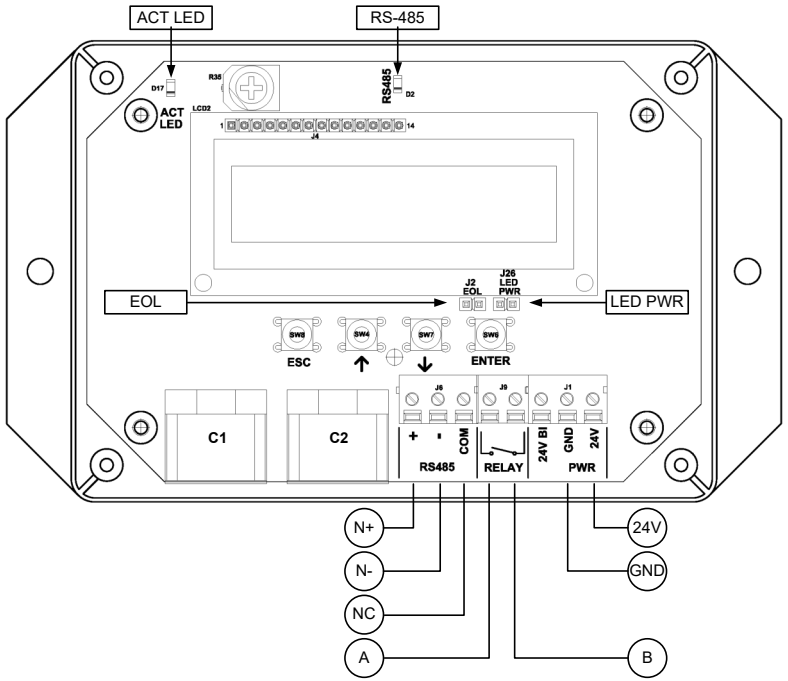

EF-N2000-T Parameters - Factory Defaults and Optional Settings/Ranges

Description	Parameter	Default	Optional Settings/Ranges	Units
System of Units	SYS	I-P (US customary)	SI (metric)	
Airflow Calculation Method	AIRFLOW	ACT (actual)	STD (standard mass flow)	
Altitude (for actual flow correction)	ALT	0	0 to 20000 [0 to 6000]	ft [m]
Low Limit Airflow Cutoff	LLIMIT	0 FPM	0 to 500 FPM [0.0 to 2.5 m/s]	
Area	AREA	*{Order Area}*	0.00 to 9999.99 [0.000 to 999.999]	sq ft [sq m]
RS-485 Network	BACnet MS/TP or Modbus RTU (requires configuration)			

Refer to the O&M Manual for more information and/or additional parameter defaults, settings and ranges.

STARTUP INSTRUCTIONS:

1. Verify that the sensor probes are located where they meet EBTRON published installation guides.
2. Verify that the probes are properly spaced with the airflow arrows pointing in the direction of airflow.

⚠ *Improperly installed probes will compromise the installed accuracy of the device and degrade system performance.*

3. Verify that the transmitter is installed and wired in accordance with the *EF-N2000-T Wiring Guide* provided with the transmitter and power is provided to the transmitter.
4. Make sure the ductwork is clean and free of debris prior to fan startup.
5. Energize power to the transformer. Power-up faults, if detected, are displayed on the LCD. If any power up faults are detected, resolve all conflicts or contact EBTRON customer service at 1-800-232-8766 before proceeding..

⚠ *If extension cables have been added, the extension cable length must be entered into the transmitter. Refer to the Operations and Maintenance Manual for more information.*

6. The transmitter is fully functional as a factory calibrated airflow and temperature measurement device in I-P units (ft, FPM, CFM °F). Airflow (CFM) and temperature (°F) are displayed on the LCD.

ⓘ *If SI units are required, refer to the the Operations and Maintenance Manual.*

ⓘ *The factory default airflow output is set to actual airflow (FPM, CFM). If standard (mass) airflow (SFPM, SCFM) is required, refer to the Operations and Maintenance Manual.*

7. Verify that the area on the hang-tag matches the actual area of the duct or opening where the probes are located (less any internal insulation). If the area is different, modify the area parameter stored in the transmitter and use the correct area for any external conversion calculations from FPM to CFM.

⚠ *Failure to use the correct area will result in volumetric airflow (CFM) measurement error and degrade system performance. If the area parameter must be changed, refer to the Operations and Maintenance Manual.*

8. If the RS-485 network connection is required continue to step 9, otherwise skip to step 11.
9. Press the ↑↓ arrow buttons simultaneously to enter the MAIN MENU. The SETTINGS menu is displayed. Press the ENT button to select the top of the SETTINGS submenu category. Press the ↓ button until the RS-485 submenu category is visible. Press the ENT button to enter the RS-485 submenu. The NET OUT parameter is visible. Press the ENT button and set the NET OUT parameter to BACNET (BACnet MS/TP) or MODBUS (Modbus RTU). Press the ENT button to save the selection. Use the ↓ arrow button and continue through the RS-485 submenu to configure the remaining network parameters. Enable network communications by setting the RS485 COM parameter to "ON" and press the ENT button. Press the ESC button twice to return to normal operation.
10. Refer to the *A4 Operations and Maintenance Manual* for detailed information on the BACnet Objects and Modbus Registers supported by this device.
11. If contact closure alarming is required continue to step 12, otherwise skip to step 13.The contact closure relay can be assigned to the high/low airflow alarm or system status alarm. Refer to the *Operations and Maintenance Manual* for more information on configuring the high/low airflow alarm..
12. Press the ↑↓ arrow buttons simultaneously to enter the MAIN MENU. The SETTINGS menu is displayed. Press the ENT button to select the top of the SETTINGS submenu category. Press the ↓ button until the RELAY submenu category is visible. Press the ENT button to enter the RELAY submenu. The R1ASGN parameter is visible. Press the ENT button and set the R1 ASGN parameter to ALRM (high/low airflow alarm) or TRBL (System Status Alarm) using the ↑↓ buttons.

Press the ENT button to save the selection. The default state for the relay is normally open (N.O.). If N.O. is required, press the ESC button twice to return to normal operation. If N.C. is required, press the ↓ button until the R1 STATUS parameter is visible. Press the ENT button and set the R1 STATUS parameter to NC using the ↑↓ buttons. Press the ENT button to save the selection. Press the ESC button twice to return to normal operation.

13. Startup is complete! If additional customization is desired, consult the *Operation and Maintenance Manual*.

VERIFICATION

Many installations require third-party airflow verification. If the airflow measuring device is within the measurement uncertainty of the verification technique, EBTRON strongly recommends that no field adjustment correction is made. EBTRON airflow measurement devices are factory calibrated to NIST traceable standards. Field adjustment is not recommended when installed in accordance to published guidelines.

If field adjustment is required, refer to the *Operation and Maintenance Manual*.

ⓘ *Transmitters can be field adjusted to match a third-party measurement. Adjusted field measurements typically result in comparative readings within ±3% of the third-party measurement. Be advised that the third-party measurement may have uncertainties greater than or equal to ±10% and should only be used to adjust the airflow measurement if the discrepancy is greater than the uncertainty of the third-party source.*

FOR MORE INFORMATION ….

Operations and Maintenance Manual.

The *Operations and Maintenance Manual* is a comprehensive reference document that contains information on installation, startup, custom configuration, built-in tools, diagnostics, troubleshooting and maintenance.

NEED MORE HELP?

EBTRON Customer Service

For toll-free factory support call 1-800-2EBTRON (1-800-232-8766), Monday through Thursday 8:00 AM to 4:30 PM and Friday 8:00 AM to 2:00 PM eastern time.

Your Local EBTRON Representative

Visit EBTRON.com for the name and contact information of your local representative.

EB-Flowll EF-A2000-U STARTUP GUIDE

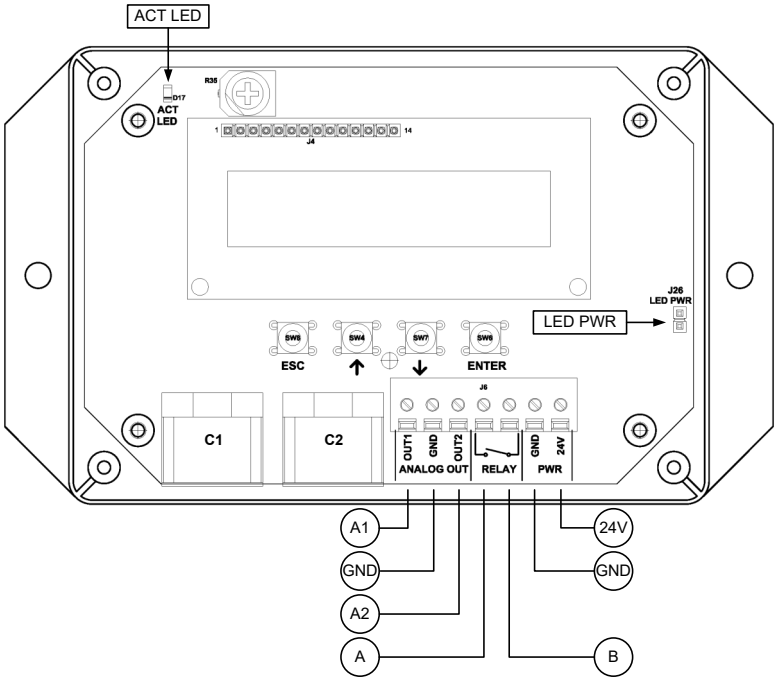

EF-A2000-U Parameters - Factory Defaults and Optional Settings/Ranges

Description	Parameter	Default	Optional Settings/Ranges	Units
System of Units	SYS	I-P (US customary)	SI (metric)	
Measurement Locations	LOCATIONS	1	2	
Airflow Calculation Method	AIRFLOW	ACT (actual)	STD (standard mass flow)	
Altitude (for actual flow correction)	ALT	0	0 to 20000 [0 to 6000]	ft [m]
Low Limit Airflow Cutoff	LLIMIT	0 FPM	0 to 500 FPM [0.0 to 2.5 m/s]	
Area	AREA	*{Null}* requires entry	0.00 to 9999.99 [0.000 to 999.999]	sq ft [sq m]
AO1 and AO2 Type	AOUT	2-10V	0-10V, 0-5 V	
AO1 Assignment (LOCATIONS=1)	AO1 ASGN	AF (Airflow)	None	
AO1 Assignment (LOCATIONS=2)	AO1 ASGN	AF1 (Airflow1)	F1-2, F2-1	
AO1 Unit of Measure	AO1 UM	FPM [m/s]	CFM [L/s]	
AO1 Minimum Scale Reading	AO1 MS	0	None	FPM [m/s]
AO1 Full Scale Reading	AO1 FS	3000 [15.0]	100 to 15000 [0.5 to 75.0]	FPM [m/s]
AO2 Assignment (LOCATIONS=1)	AO2 ASGN	TEMP (Temperature)	ALRM (Alarm) or TRBL (System Trouble)	
AO2 Assignment (LOCATIONS=2)	AO2 ASGN	AF2 (Airflow2)	F1-2, F2-1	
AO2 Unit of Measure	AO2 UM	F [C]	None	°F [°C]
AO2 Minimum Scale Reading	AO2 MS	-20 [-30]	-50 to 160 [-50 to 70]	°F [°C]
AO2 Full Scale Reading	AO2 FS	160 [70]	-50 to 160 [-50 to 70]	°F [°C]

Refer to the O&M Manual for more information and/or <u>additional</u> parameter defaults, settings and ranges.

STARTUP INSTRUCTIONS:

1. Verify that the sensor probes are located where they meet EBTRON published installation guides.
2. Verify that the probes are properly spaced with the airflow arrows pointing in the direction of airflow.

⚠ *Improperly installed probes will compromise the installed accuracy of the device and degrade system performance.*

3. Verify that the transmitter is installed and wired in accordance with the *EF-A2000-U Wiring Guide* provided with the transmitter and power is provided to the transmitter.
4. Make sure the ductwork is clean and free of debris prior to fan startup.
5. Energize power to the transformer. Power-up faults, if detected, are displayed on the LCD. If any power up faults are detected, resolve all conflicts or contact EBTRON customer service at 1-800-232-8766 before proceeding..

⚠ *If extension cables have been added, the extension cable length must be entered into the transmitter. Refer to the Operations and Maintenance Manual for more information.*

6. The transmitter is fully functional as a factory calibrated airflow and temperature measurement device in I-P units (ft, FPM, CFM °F). Airflow (FPM) and temperature (°F) are displayed on the LCD.

ⓘ *Airflow is displayed in FPM in lieu of CFM because the exact area where the sensor probes are located is not known until installation is complete.*

ⓘ *If SI units are required, refer to the Operations and Maintenance Manual.*

ⓘ *The factory default airflow output is set to actual airflow (FPM, CFM). If standard (mass) airflow (SFPM, SCFM) is required, refer to the Operations and Maintenance Manual.*

7. If two probes are provided and each probe is used in a separate measurement location (ex. intake and exhaust paths of an ERV) continue to step 8, otherwise skip to step 9.
8. Press the ↑↓ arrow buttons simultaneously to enter the MAIN MENU. The SETTINGS menu is displayed. Press the ENT button to select the top of the SETTINGS submenu category. Press the ENT button to enter the GLOBAL submenu. Press the ↓ button until the LOCATIONS parameter is visible. Press the ENT button and set the LOCATIONS parameter to 2 using the ↑↓ buttons. Press the ENT button to save the selection. Press the ESC button twice to return to normal operation. Location 1 is the probe connected to receptacle C1.
9. It is recommended that the area of the opening where the probes are mounted is entered manually or calculated using the area wizard tool (AREA WIZ). The area parameter, AREA, can also be entered manually directly through the SETTINGS menu.

ⓘ *Use the free area, excluding the probe blockage, where the probes are located.*

ⓘ *Refer to the Operations and Maintenance Manual if manual entry of the AREA parameter is desired.*

⚠ *Failure to use the correct area <u>will</u> result in volumetric airflow (CFM) measurement error and degrade system performance.*

10. To use the AREA WIZ tool, press the ↑↓ arrow buttons simultaneously to enter the MAIN MENU. The SETTINGS menu is displayed. Press the ↓ button until the TOOLS menu category is visible. Press the ENT button to select the top of the TOOLS submenu category. Press the ↓ button until the AREA WIZ tool is visible. Press the ENT button to execute the tool. Select "YES" when the SAVE prompt is displayed. The display will be changed from FPM to CFM and the AREA parameter will be updated.
11. If analog output signals are used continue to step 12, otherwise skip to step 17.

12. The output signal type and range (2-10 VDC, 0-5 VDC or 0-10 VDC) of AO1 and AO2 is determined by the AOUT parameter. The transmitter is factory set to 2-10V (i.e. AOUT=2-10V).

ⓘ *The VDC output circuit can drive the input circuit of devices designed to measure 4-wire current loops with a resistive load ≥250 ohms.*

⚠ *Do not apply any excitation voltage to the output of the transmitter.*

13. Verify that the transmitter is configured to match the analog input requirements of the host controller. Press the ESC and ↑ buttons simultaneously to display the transmitter setting for the AOUT parameter. If the AOUT parameter is not correct, press the ENT button and use the ↑ and ↓ buttons to set AOUT. Press the ENT button to execute and display the change. Press the ESC button to return to normal operation.
14. The analog output signal for airflow (AO1) is linear. The minimum scale reading (0% output) of the airflow signal is fixed at 0 and the full scale reading (100% output) is factory set to 3,000 FPM.

ⓘ *If the transmitter is configured for two locations, the default output for AO1 is Airflow1 (AF1). If differential airflow is desired (i.e., Airflow 1-Airflow 2 or Airflow 2-Airflow 1), refer to the Operations and Maintenance Manual.*

Multiply the default full scale velocity (FPM)by the correct total area (i.e. AREA parameter) of the measurement location to determine the full-scale or span (CFM) for the B.A.S. to avoid additional field configuration. EBTRON airflow measurement device accuracy is percent-of-reading. Changing the full scale reading does not affect measurement accuracy.

ⓘ *If custom airflow scaling or unit of measure are required, refer to the Operations and Maintenance Manual.*

15. If the transmitter is configured for two locations, repeat step 14 for AO2, then skip to step 17.

ⓘ *If the transmitter is configured for two locations, the default output for AO2 is Airflow2 (AF2). If differential airflow is desired (i.e., Airflow 1-Airflow 2 or Airflow 2-Airflow 1), refer to the Operations and Maintenance Manual.*

16. The analog output signal for temperature (AO2) is linear. The minimum scale reading (0% output) is set to -20 ºF and full scale reading (100% output) is set to 160 ºF.

ⓘ *If custom temperature scaling is required, refer to the Operations and Maintenance Manual.*

ⓘ *AO2 can be configured for a high/low airflow alarm or system status alarm. Refer to the Operations and Maintenance Manual for more information.*

17. If contact closure alarming is required continue to step 18, otherwise skip to step 20.
18. The contact closure relay can be assigned to the high/low airflow alarm or system status alarm. Refer to the *Operations and Maintenance Manual* for more information on configuring the high/low airflow alarm..
19. Press the ↑↓ arrow buttons simultaneously to enter the MAIN MENU. The SETTINGS menu is displayed. Press the ENT button to select the top of the SETTINGS submenu category. Press the ↓ button until the RELAY submenu category is visible. Press the ENT button to enter the RELAY submenu. The R1 ASGN parameter is visible. Press the ENT button and set the R1 ASGN parameter to ALRM (high/low airflow alarm) or TRBL (System Status Alarm) using the ↑↓ buttons. Press the ENT button to save the selection. The default state for the relay is normally open (N.O.). If N.O. is required, press the ESC button twice to return to normal operation. If N.C. is required, press the ↓ button until the R1 STATUS parameter is visible. Press the ENT button and set the R1 STATUS parameter to NC using the ↑↓ buttons. Press the ENT button to save the selection. Press the ESC button twice to return to normal operation.
20. Startup is complete! If additional customization is desired, consult the *Operation and Maintenance Manual*.

VERIFICATION

Many installations require third-party airflow verification. If the airflow measuring device is within the measurement uncertainty of the verification technique, EBTRON strongly recommends that no field adjustment correction is made. EBTRON airflow measurement devices are factory calibrated to NIST traceable standards. Field adjustment is not recommended when installed in accordance to published guidelines.

If field adjustment is required, refer to the *Operation and Maintenance Manual*.

ⓘ *Transmitters can be field adjusted to match a third-party measurement. Adjusted field measurements typically result in comparative readings within ±3% of the third-party measurement. Be advised that the third-party measurement may have uncertainties greater than or equal to ±10% and should only be used to adjust the airflow measurement if the discrepancy is greater than the uncertainty of the third-party source.*

The -U probe type is often used in outdoor air intakes of smaller rooftop units or mounted directly downstream of the blades of an intake louver on larger systems. In this type of application, adjustment to a reliable third-party measurement may improve the "out of the box" installed accuracy of the device.

FOR MORE INFORMATION ….

Operations and Maintenance Manual.

The *Operations and Maintenance Manual* is a comprehensive reference document that contains information on installation, startup, custom configuration, built-in tools, diagnostics, troubleshooting and maintenance.

NEED MORE HELP?

EBTRON Customer Service

For toll-free factory support call 1-800-2EBTRON (1-800-232-8766), Monday through Thursday 8:00 AM to 4:30 PM and Friday 8:00 AM to 2:00 PM eastern time.

Your Local EBTRON Representative

Visit EBTRON.com for the name and contact information of your local representative.

EB-FlowII EF-N2000-U STARTUP GUIDE

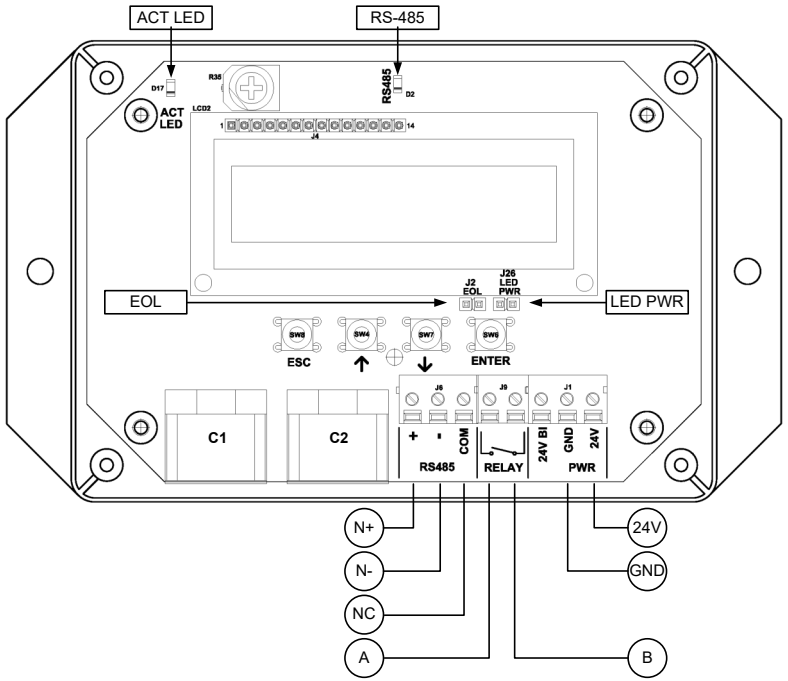

EF-N2000-U Parameters - Factory Defaults and Optional Settings/Ranges

Description	Parameter	Default	Optional Settings/Ranges	Units
System of Units	SYS	I-P (US customary)	SI (metric)	
Airflow Calculation Method	AIRFLOW	ACT (actual)	STD (standard mass flow)	
Altitude (for actual flow correction)	ALT	0	0 to 20000 [0 to 6000]	ft [m]
Low Limit Airflow Cutoff	LLIMIT	0 FPM	0 to 500 FPM [0.0 to 2.5 m/s]	
Area	AREA	*{Null}* requires entry	0.00 to 9999.99 [0.000 to 999.999]	sq ft [sq m]
RS-485 Network	BACnet MS/TP or Modbus RTU (requires configuration)			

Refer to the O&M Manual for more information and/or <u>additional</u> parameter defaults, settings and ranges.

STARTUP INSTRUCTIONS:

1. Verify that the sensor probes are located where they meet EBTRON published installation guides.
2. Verify that the probes are properly spaced with the airflow arrows pointing in the direction of airflow.

⚠ *Improperly installed probes will compromise the installed accuracy of the device and degrade system performance.*

3. Verify that the transmitter is installed and wired in accordance with the *EF-N2000-U Wiring Guide* provided with the transmitter and power is provided to the transmitter.
4. Make sure the ductwork is clean and free of debris prior to fan startup.
5. Energize power to the transformer. Power-up faults, if detected, are displayed on the LCD. If any power up faults are detected, resolve all conflicts or contact EBTRON customer service at 1-800-232-8766 before proceeding..

⚠ *If extension cables have been added, the extension cable length must be entered into the transmitter. Refer to the Operations and Maintenance Manual for more information.*

6. The transmitter is fully functional as a factory calibrated airflow and temperature measurement device in I-P units (ft, FPM, CFM °F). Airflow (FPM) and temperature (°F) are displayed on the LCD.

ⓘ *Airflow is displayed in FPM in lieu of CFM because the exact area where the sensor probes are located is not known until installation is complete.*

ⓘ *If SI units are required, refer to the the Operations and Maintenance Manual.*

ⓘ *The factory default airflow output is set to actual airflow (FPM, CFM). If standard (mass) airflow (SFPM, SCFM) is required, refer to the Operations and Maintenance Manual.*

7. If two probes are provided and each probe is used in a separate measurement location (ex. intake and exhaust paths of an ERV) continue to step 8, otherwise skip to step 9.
8. Press the ↑↓ arrow buttons simultaneously to enter the MAIN MENU. The SETTINGS menu is displayed. Press the ENT button to select the top of the SETTINGS submenu category. Press the ENT button to enter the GLOBAL submenu. Press the ↓ button until the LOCATIONS parameter is visible. Press the ENT button and set the LOCATIONS parameter to 2 using the ↑↓ buttons. Press the ENT button to save the selection. Press the ESC button twice to return to normal operation. Location 1 is the probe connected to receptacle C1.
9. It is recommended that the area of the opening where the probes are mounted is entered manually or calculated using the area wizard tool (AREA WIZ). The area parameter, AREA, can also be entered manually directly through the SETTINGS menu.

ⓘ *Use the free area, excluding the probe blockage, where the probes are located.*

ⓘ *Refer to the Operations and Maintenance Manual if manual entry of the AREA parameter is desired.*

⚠ *Failure to use the correct area <u>will</u> result in volumetric airflow (CFM) measurement error and degrade system performance.*

10. To use the AREA WIZ tool, press the ↑↓ arrow buttons simultaneously to enter the MAIN MENU. The SETTINGS menu is displayed. Press the ↓ button until the TOOLS menu category is visible. Press the ENT button to select the top of the TOOLS submenu category. Press the ↓ button until the AREA WIZ tool is visible. Press the ENT button to execute the tool. Select "YES" when the SAVE prompt is displayed. The display will be changed from FPM to CFM and the AREA parameter will be updated.
11. If the RS-485 network connection is required continue to step 12, otherwise skip to step 14.

12. Press the ↑↓ arrow buttons simultaneously to enter the MAIN MENU. The SETTINGS menu is displayed. Press the ENT button to select the top of the SETTINGS submenu category. Press the ↓ button until the RS-485 submenu category is visible. Press the ENT button to enter the RS-485 submenu. The NET OUT parameter is visible. Press the ENT button and set the NET OUT parameter to BACNET (BACnet MS/TP) or MODBUS (Modbus RTU). Press the ENT button to save the selection. Use the ↓ arrow button and continue through the RS-485 submenu to configure the remaining network parameters. Enable network communications by setting the RS485 COM parameter to "ON" and press the ENT button. Press the ESC button twice to return to normal operation.
13. Refer to the *A4 Operations and Maintenance Manual* for detailed information on the BACnet Objects and Modbus Registers supported by this device.
14. If contact closure alarming is required continue to step 15, otherwise skip to step 17.
15. The contact closure relay can be assigned to the high/low airflow alarm or system status alarm. Refer to the *Operations and Maintenance Manual* for more information on configuring the high/low airflow alarm..
16. Press the ↑↓ arrow buttons simultaneously to enter the MAIN MENU. The SETTINGS menu is displayed. Press the ENT button to select the top of the SETTINGS submenu category. Press the ↓ button until the RELAY submenu category is visible. Press the ENT button to enter the RELAY submenu. The R1ASGN parameter is visible. Press the ENT button and set the R1 ASGN parameter to ALRM (high/low airflow alarm) or TRBL (System Status Alarm) using the ↑↓ buttons. Press the ENT button to save the selection. The default state for the relay is normally open (N.O.). If N.O. is required, press the ESC button twice to return to normal operation. If N.C. is required, press the ↓ button until the R1 STATUS parameter is visible. Press the ENT button and set the R1 STATUS parameter to NC. Press the ENT button to save the selection. Press the ESC button twice to return to normal operation.
17. Startup is complete! If additional customization is desired, consult the *Operation and Maintenance Manual*.

VERIFICATION

Many installations require third-party airflow verification. If the airflow measuring device is within the measurement uncertainty of the verification technique, EBTRON strongly recommends that no field adjustment correction is made. EBTRON airflow measurement devices are factory calibrated to NIST traceable standards. Field adjustment is not recommended when installed in accordance to published guidelines.

If field adjustment is required, refer to the *Operation and Maintenance Manual*.

ⓘ *Transmitters can be field adjusted to match a third-party measurement. Adjusted field measurements typically result in comparative readings within ±3% of the third-party measurement. Be advised that the third-party measurement may have uncertainties greater than or equal to ±10% and should only be used to adjust the airflow measurement if the discrepancy is greater than the uncertainty of the third-party source.*

The -U probe type is often used in outdoor air intakes of smaller rooftop units or mounted directly downstream of the blades of an intake louver on larger systems. In this type of application, adjustment to a reliable third-party measurement may improve the "out of the box" installed accuracy of the device.

FOR MORE INFORMATION ….

Operations and Maintenance Manual.

The *Operations and Maintenance Manual* is a comprehensive reference document that contains information on installation, startup, custom configuration, built-in tools, diagnostics, troubleshooting and maintenance.

NEED MORE HELP?

EBTRON Customer Service

For toll-free factory support call 1-800-2EBTRON (1-800-232-8766), Monday through Thursday 8:00 AM to 4:30 PM and Friday 8:00 AM to 2:00 PM eastern time.

Your Local EBTRON Representative

Visit EBTRON.com for the name and contact information of your local representative.

Advantage IV (A4) GTA108e-F STARTUP GUIDE

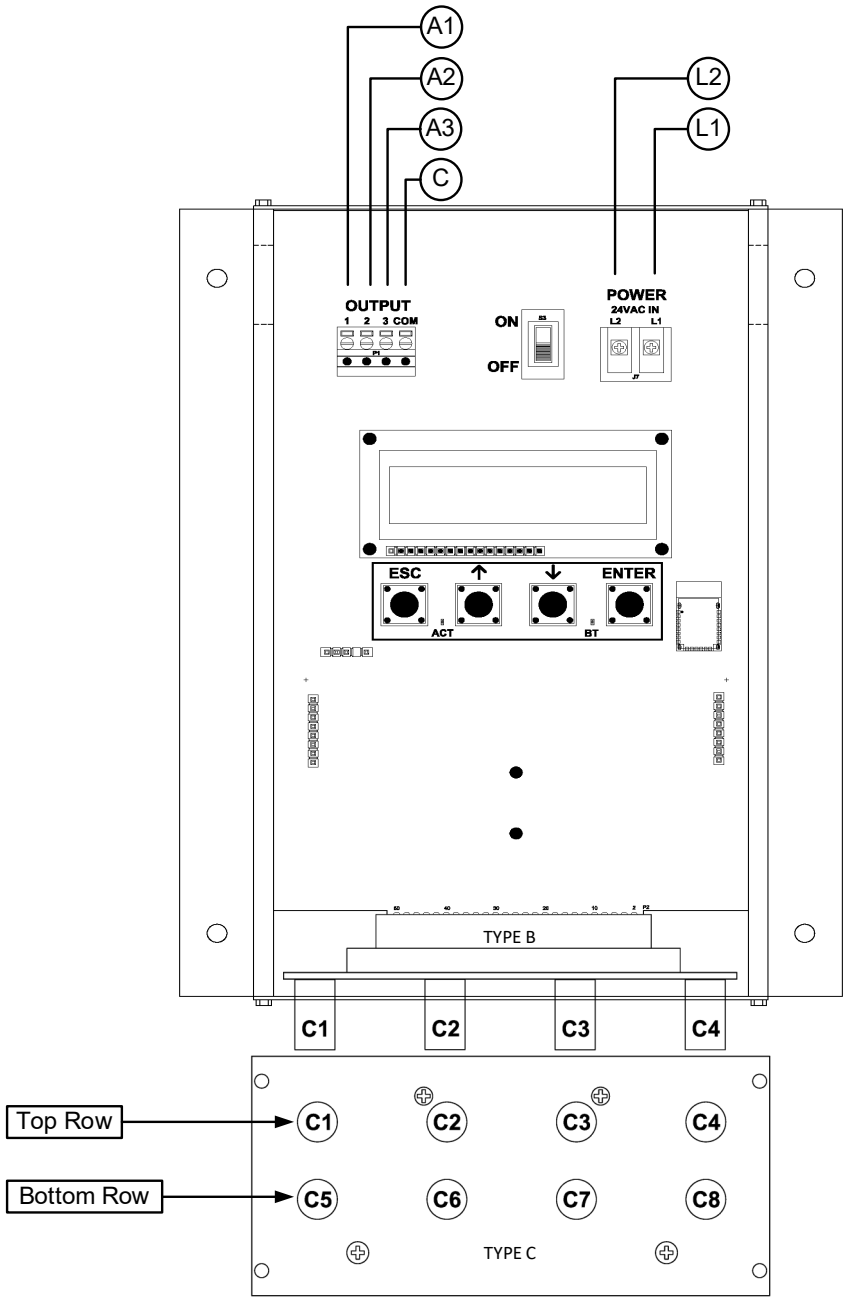

GTA108e-F Parameters - Factory Defaults and Optional Settings/Ranges

Description	Parameter	Default	Optional Settings/Ranges	Units
System of Units	SYS	I-P (US customary)	SI (metric)	
Airflow Calculation Method	AIRFLOW	ACT (actual)	STD (standard mass flow)	
Altitude (for actual flow correction)	ALT	0	0 to 20000 [0 to 6000]	ft [m]
Low Limit Airflow Cutoff	LLIMIT	0 FPM	0 to 500 FPM [0.0 to 2.5 m/s]	
Area	AREA	*{Null}* requires entry	0.00 to 9999.99 [0.000 to 999.999]	sq ft [sq m]
AO1, AO2 and AO3 Type	AOUT	4-20mA	0-10V, 0-5 V	
AO1 Assignment	AO1 ASGN	AF (Airflow)	None	
AO1 Unit of Measure	AO1 UM	FPM [m/s]	CFM [L/s]	
AO1 Minimum Scale Reading	AO1 MS	0	None	FPM [m/s]
AO1 Full Scale Reading	AO1 FS	10000 [50.0]	100 to 15000 [0.5 to 75.0]	FPM [m/s]
AO2 Assignment (/SI and /DI)	AO2 ASGN	TEMP (Temperature)	ALRM (Alarm) or TRBL (System Trouble)	
AO2 Assignment (/An)	AO2 ASGN	TEMP (Temperature)	ALRM, FA (Fan Alarm) or TRBL	
AO2 Unit of Measure	AO2 UM	F [C]	None	°F [°C]
AO2 Minimum Scale Reading	AO2 MS	-20 [-30]	-50 to 160 [-50 to 70]	°F [°C]
AO2 Full Scale Reading	AO2 FS	160 [70]	-50 to 160 [-50 to 70]	°F [°C]
AO3 Assignment	AO3 ASGN	N/A	N/A	

Refer to the O&M Manual for more information and/or additional parameter defaults, settings and ranges.

STARTUP INSTRUCTIONS:

1. Verify that the sensor probes are properly installed and secured in the fan inlet(s).

⚠ *Improperly installed probes will compromise the installed accuracy of the device and degrade system performance.*

2. Verify that the transmitter is installed and wired in accordance with the *GTA108e-F Wiring Guide* provided with the transmitter and power is provided to the transmitter.
3. Make sure the ductwork is clean and free of debris prior to fan startup.
4. Move the power switch to the "ON" position. Power-up faults, if detected, are displayed on the LCD. If any power up faults are detected, resolve all conflicts or contact EBTRON customer service at 1-800-232-8766 before proceeding..

⚠ *If extension cables have been added, the extension cable length must be entered into the transmitter. Refer to the Operations and Maintenance Manual for more information.*

5. The transmitter is fully functional as a factory calibrated airflow and temperature measurement device in I-P units (ft, FPM, CFM °F). Airflow (CFM) and temperature (°F) are displayed on the LCD.

ⓘ *Airflow is displayed in FPM in lieu of CFM because the exact area where the fan inlet probes are located is not known until installation is complete.*

ⓘ *If SI units are required, refer to the Operations and Maintenance Manual.*

ⓘ *The factory default airflow output is set to actual airflow (FPM, CFM). If standard (mass) airflow (SFPM, SCFM) is required, refer to the Operations and Maintenance Manual.*

6. It is recommended that the area of the fan inlet is entered manually or calculated using the fan area wizard tool (FAN WIZ). The total area parameter, AREA, can also be entered manually directly through the SETTINGS menu.

ⓘ *The area is always determined by using the diameter of the inlet at the leading (upstream) side of the sensor node housing.*

ⓘ *Refer to the Operations and Maintenance Manual if manual entry of the AREA parameter is desired.*

⚠ *Failure to use the correct area <u>will</u> result in volumetric airflow (CFM) measurement error and degrade system performance.*

7. To use the FAN WIZ tool, press the ↑↓ arrow buttons simultaneously to enter the MAIN MENU. The SETTINGS menu is displayed. Press the ↓ button until the TOOLS menu category is visible. Press the ENT button to select the top of the TOOLS submenu category. Press the ↓ button until the FAN WIZ tool is visible. Press the ENT button to execute the tool. Select "YES" when the SAVE prompt is displayed. The display will be changed from FPM to CFM and the AREA parameter will be updated.
8. If analog output signals are used continue to step 9, otherwise skip to step 13.
9. The output signal type and range (4-20 mA, 0-5 VDC or 0-10VDC) of AO1 and AO2 is determined by the AOUT parameter. The transmitter is factory set to 4-20mA.

⚠ *The 4-20mA is "4-wire type" and not loop powered. Do not apply any excitation voltage to the output of the transmitter.*

10. Verify that the transmitter is configured to match the analog input requirements of the host controller. Press the ESC and ↑ buttons simultaneously to display the transmitter setting for the AOUT parameter. If the AOUT parameter is not correct, press the ENT button and use the ↑ and ↓ buttons to set AOUT. Press the ENT button to execute and display the change. Press the ESC button to return to normal operation.
11. The analog output signal for airflow (AO1) is linear. The minimum scale reading (0% output) of the airflow signal is fixed at 0 and the full scale reading (100% output) is factory set to 10,000 FPM.

Multiply the default full scale velocity (FPM)by the correct area of the measurement location to determine the full-scale or span (CFM) for the B.A.S. to avoid field configuration. EBTRON airflow measurement device accuracy is percent-of-reading. Changing the full scale reading does not affect measurement accuracy.

ⓘ *If custom airflow scaling or unit of measure are required, refer to the Operations and Maintenance Manual.*

12. The analog output signal for temperature (AO2) is linear. The minimum scale reading (0% output) is set to -20 ºF and full scale reading (100% output) is set to 160 ºF.

ⓘ *If custom temperature scaling is required, refer to the Operations and Maintenance Manual.*

ⓘ *AO2 can be configured for a high/low airflow alarm or system status alarm. AO2 can also be configured for the fan alarm if the /An fan array model is provided. Refer to the Operations and Maintenance Manual for more information.*

13. Fan array models with the /An suffix can be configured to ignore a fan when individual fault is detected. Refer to the Operations and Maintenance Manual for more information.
14. Startup is complete! If additional customization is desired, consult the *Operation and Maintenance Manual*.

VERIFICATION

Many installations require third-party airflow verification. If the airflow measuring device is within the measurement uncertainty of the verification technique, EBTRON strongly recommends that no field adjustment correction is made. EBTRON airflow measurement devices are factory calibrated to NIST traceable standards. Field adjustment is not recommended when installed in accordance to published guidelines.

If field adjustment is required, refer to the *Operation and Maintenance Manual*.

ⓘ *Transmitters can be field adjusted to match a third-party measurement. Adjusted field measurements typically result in comparative readings within ±3% of the third-party measurement. Be advised that the third-party measurement may have uncertainties greater than or equal to ±10% and should only be used to adjust the airflow measurement if the discrepancy is greater than the uncertainty of the third-party source.*

Variability in field mounting and fan inlet entry conditions may affect the installed accuracy of the measurement device. When airflow measurement devices are installed in the supply and return airflow paths for airflow tracking, set the system to 100% recirculation mode with no intake or relief at the air handling unit. Confirm that the intake and relief air dampers are closed and leakage is negligible. Confirm that the recirculation (return) air damper is fully open. If a return fan is installed, modulate the supply and return fan together in a manner that avoids under– or over-pressurization of the relief and intake plenums. Adjust one location to match the other using the field adjust wizard (FAW) at one or two airflow rates. This technique has been show to significantly improve tracking performance on marginal installations. Select the best measurement location as the reference. Refer to the Operations and Maintenance Manual for more information.

NEED MORE HELP?

<u>EBTRON Customer Service</u>

For toll-free factory support call 1-800-2EBTRON (1-800-232-8766), Monday through Thursday 8:00 AM to 4:30 PM and Friday 8:00 AM to 2:00 PM eastern time.

<u>Your Local EBTRON Representative</u>

Visit EBTRON.com for the name and contact information of your local representative.

Advantage IV (A4) GTB108-F STARTUP GUIDE

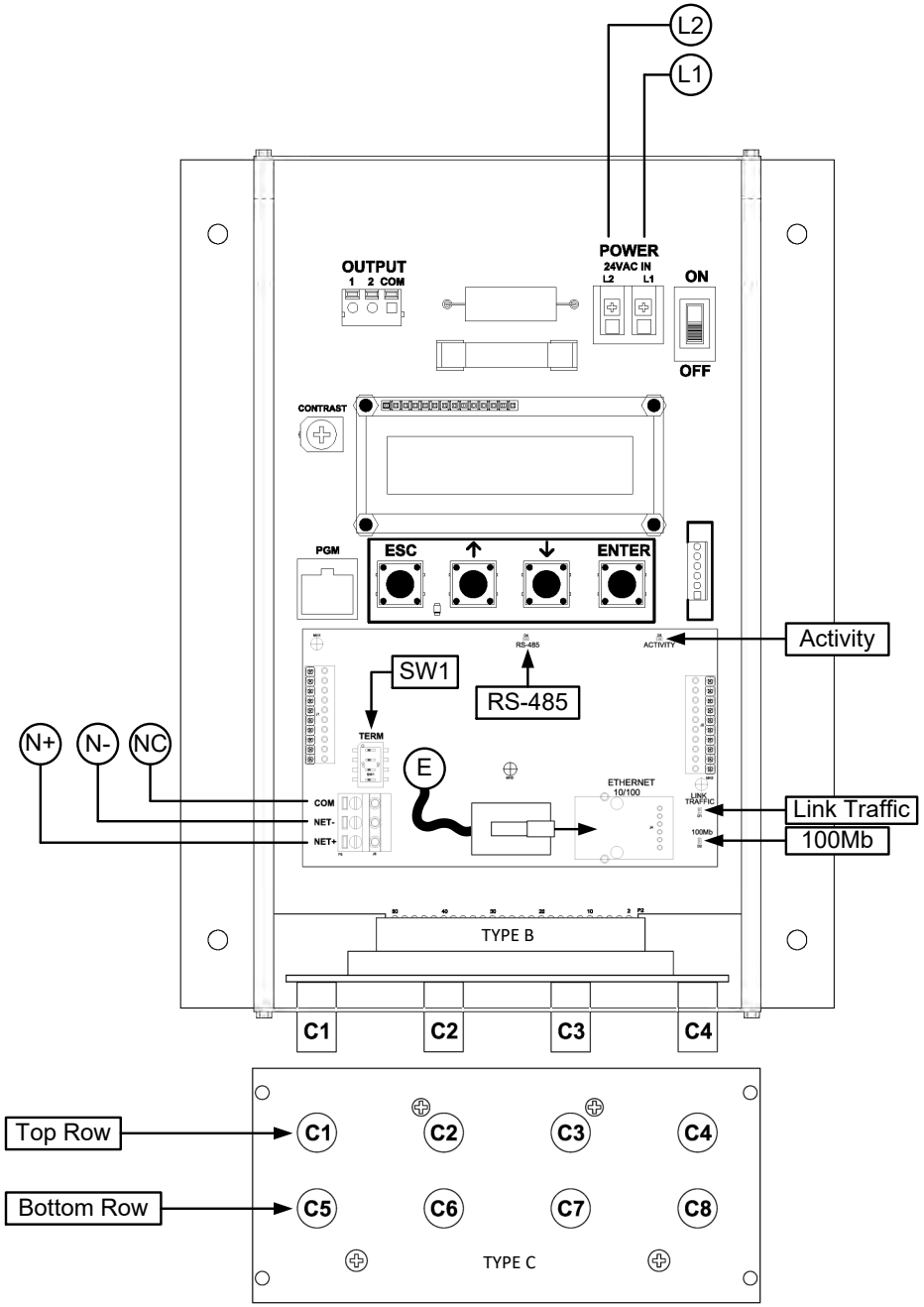

GTB108-F Parameters - Factory Defaults and Optional Settings/Ranges

Description	Parameter	Default	Optional Settings/Ranges	Units
System of Units	SYS	I-P (US customary)	SI (metric)	
Airflow Calculation Method	AIRFLOW	ACT (actual)	STD (standard mass flow)	
Altitude (for actual flow correction)	ALT	0	0 to 20000 [0 to 6000]	ft [m]
Low Limit Airflow Cutoff	LLIMIT	0 FPM	0 to 500 FPM [0.0 to 2.5 m/s]	
Area	AREA	*{Null}* requires entry	0.00 to 9999.99 [0.000 to 999.999]	sq ft [sq m]
RS-485 Network	BACnet MS/TP or Modbus RTU (requires configuration)			
Ethernet Network	Simultaneous BACnet IP or BACnet Ethernet, Modbus TCP, and TCP/IP (requires configuration)			

Refer to the O&M Manual for more information and/or additional parameter defaults, settings and ranges.

STARTUP INSTRUCTIONS:

1. Verify that the sensor probes are properly installed and secured in the fan inlet(s).

⚠ *Improperly installed probes will compromise the installed accuracy of the device and degrade system performance.*

2. Verify that the transmitter is installed and wired in accordance with the *GTB108-F Wiring Guide* provided with the transmitter and power is provided to the transmitter.
3. Make sure the ductwork is clean and free of debris prior to fan startup.
4. Move the power switch to the "ON" position. Power-up faults, if detected, are displayed on the LCD. If any power up faults are detected, resolve all conflicts or contact EBTRON customer service at 1-800-232-8766 before proceeding..

⚠ *If extension cables have been added, the extension cable length must be entered into the transmitter. Refer to the Operations and Maintenance Manual for more information.*

5. The transmitter is fully functional as a factory calibrated airflow and temperature measurement device in I-P units (ft, FPM, CFM °F). Airflow (CFM) and temperature (°F) are displayed on the LCD.

ⓘ *If SI units are required, refer to the the Operations and Maintenance Manual.*

ⓘ *The factory default airflow output is set to actual airflow (FPM, CFM). If standard (mass) airflow (SFPM, SCFM) is required, refer to the Operations and Maintenance Manual.*

6. It is recommended that the area of the fan inlet is entered manually or calculated using the fan area wizard tool (FAN WIZ). The total area parameter, AREA, can also be entered manually directly through the SETTINGS menu.

ⓘ *The area is always determined by using the diameter of the inlet at the leading (upstream) side of the sensor node housing.*

ⓘ *Refer to the Operations and Maintenance Manual if manual entry of the AREA parameter is desired.*

⚠ *Failure to use the correct area will result in volumetric airflow (CFM) measurement error and degrade system performance. If the area parameter must be changed, refer to the Operations and Maintenance Manual.*

7. To use the FAN WIZ tool, press the ↑↓ arrow buttons simultaneously to enter the MAIN MENU. The SETTINGS menu is displayed. Press the ↓ button until the TOOLS menu category is visible. Press the ENT button to select the top of the TOOLS submenu category. Press the ↓ button until the FAN WIZ tool is visible. Press the ENT button to execute the tool. Select "YES" when the SAVE prompt is displayed. The display will be changed from FPM to CFM and the AREA parameter will be updated.
8. If the RS-485 network connection is required continue to step 9, otherwise skip to step 11.
9. Press the ↑↓ arrow buttons simultaneously to enter the MAIN MENU. The SETTINGS menu is displayed. Press the ENT button to select the top of the SETTINGS submenu category. Press the ↓

button until the RS-485 submenu category is visible. Press the ENT button to enter the RS-485 submenu. The NET OUT parameter is visible. Press the ENT button and set the NET OUT parameter to BACNET (BACnet MS/TP) or MODBUS (Modbus RTU). Press the ENT button to save the selection. Use the ↓ arrow button and continue through the RS-485 submenu to configure the remaining network parameters. Enable network communications by setting the RS485 COM parameter to "ON" and press the ENT button. Press the ESC button twice to return to normal operation.

10. Refer to the *A4 Operations and Maintenance Manual* for detailed information on the BACnet Objects and Modbus Registers supported by this device.
11. If the Ethernet network connection is required continue to step 12, otherwise skip to step 14.
12. Press the ↑↓ arrow buttons simultaneously to enter the MAIN MENU. The SETTINGS menu is displayed. Press the ENT button to select the top of the SETTINGS submenu category. Press the ↓ button until the ETHERNET submenu category is visible. Press the ENT button again to enter the ETHERNET submenu. Configure the network parameters and press the ESC button twice to return to normal operation.

ⓘ *GTB108 transmitters support simultaneous communication via BACnet IP or BACnet Ethernet, Modbus TCP, and TCP/IP.*

13. Refer to the *Operations and Maintenance Manual* for detailed information on the BACnet Objects and Modbus Registers supported by this device.
14. Fan array models with the /An suffix can be configured to ignore a fan when an individual fan fault is detected. Refer to the *Operations and Maintenance Manual* for more information.
15. Startup is complete! If additional customization is desired, consult the *Operation and Maintenance Manual*.

VERIFICATION

Many installations require third-party airflow verification. If the airflow measuring device is within the measurement uncertainty of the verification technique, EBTRON strongly recommends that no field adjustment correction is made. EBTRON airflow measurement devices are factory calibrated to NIST traceable standards.

If field adjustment is required, refer to the *Operation and Maintenance Manual*.

ⓘ *If minimum placement guidelines cannot be achieved, installed accuracy may be compromised. Transmitters can be field adjusted to match a third-party measurement. Adjusted field measurements typically result in comparative readings within ±3% of the third-party measurement. Be advised that the third-party measurement may have uncertainties greater than or equal to ±10% and should only be used to adjust the airflow measurement device if the probes do not meet minimum placement requirements or the discrepancy is greater than the uncertainty of the third-party source.*

Variability in field mounting and fan inlet entry conditions may affect the installed accuracy of the measurement device. When airflow measurement devices are installed in the supply and return airflow paths for airflow tracking, set the system to 100% recirculation mode with no intake or relief at the air handling unit. Confirm that the intake and relief air dampers are closed and leakage is negligible. Confirm that the recirculation (return) air damper is fully open. If a return fan is installed, modulate the supply and return fan together in a manner that avoids under– or over-pressurization of the relief and intake plenums. Adjust one location to match the other using the field adjust wizard (FAW) at one or two airflow rates. This technique has been show to significantly improve tracking performance on marginal installations. Select the best measurement location as the reference. Refer to the Operations and Maintenance Manual for more information.

FOR MORE INFORMATION ….

Operations and Maintenance Manual.

The *Operations and Maintenance Manual* is a comprehensive reference document that contains information on installation, startup, custom configuration, built-in tools, diagnostics, troubleshooting and maintenance.

NEED MORE HELP?

EBTRON Customer Service

For toll-free factory support call 1-800-2EBTRON (1-800-232-8766), Monday through Thursday 8:00 AM to 4:30 PM and Friday 8:00 AM to 2:00 PM eastern time.

Your Local EBTRON Representative

Visit EBTRON.com for the name and contact information of your local representative.

Advantage IV (A4) GTC108-F STARTUP GUIDE

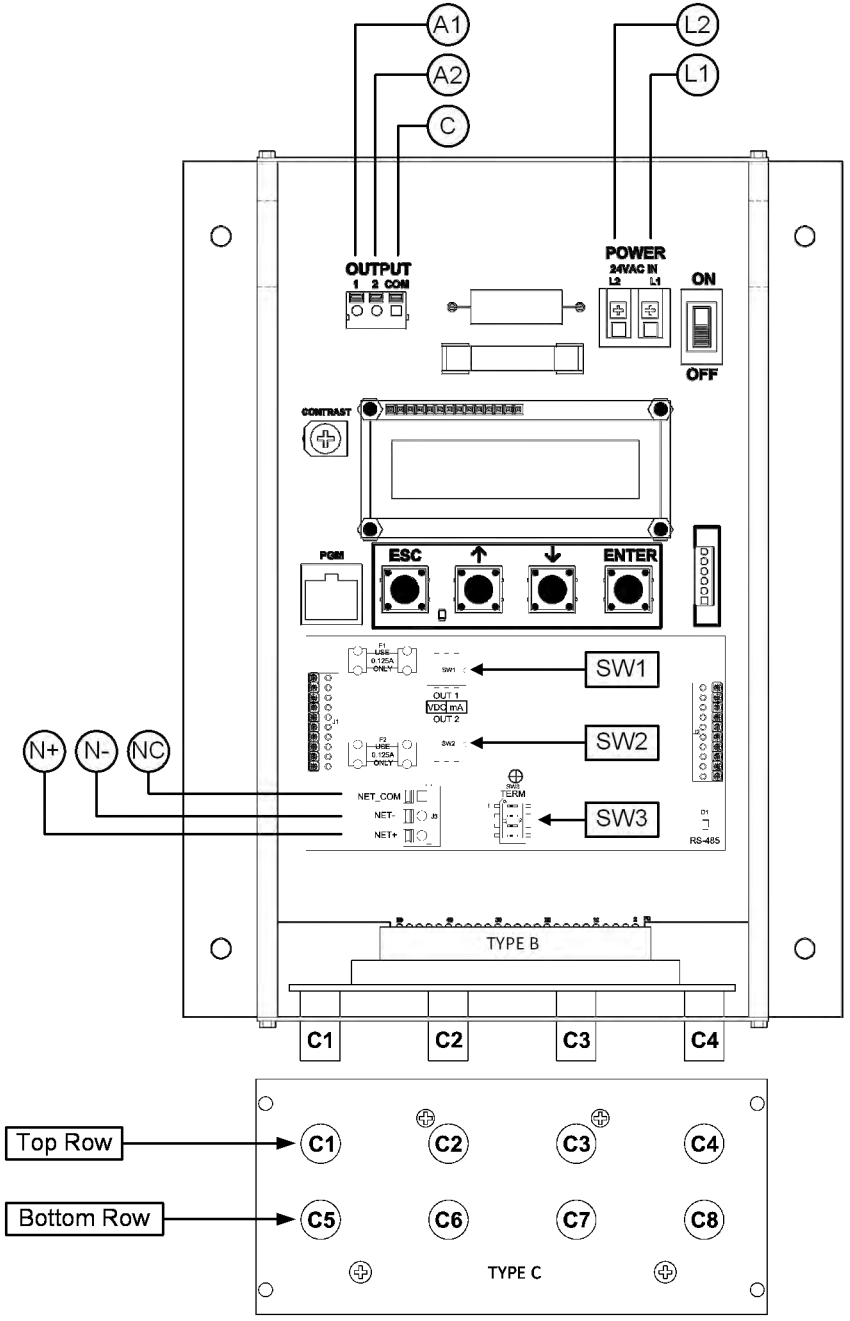

GTC108-F Parameters - Factory Defaults and Optional Settings/Ranges

Description	Parameter	Default	Optional Settings/Ranges	Units
System of Units	SYS	I-P (US customary)	SI (metric)	
Airflow Calculation Method	AIRFLOW	ACT (actual)	STD (standard mass flow)	
Altitude (for actual flow correction)	ALT	0	0 to 20000 [0 to 6000]	ft [m]
Low Limit Airflow Cutoff	LLIMIT	0 FPM	0 to 500 FPM [0.0 to 2.5 m/s]	
Area	AREA	*{Null}* requires entry	0.00 to 9999.99 [0.000 to 999.999]	sq ft [sq m]
AO1 Type	AOUT1	4-20mA	0-10V, 0-5 V	
AO2 Type	AOUT2	4-20mA	0-10V, 0-5 V	
AO1 Assignment	AO1 ASGN	AF (Airflow)	None	
AO1 Unit of Measure	AO1 UM	FPM [m/s]	CFM [L/s]	
AO1 Minimum Scale Reading	AO1 MS	0	None	FPM [m/s]
AO1 Full Scale Reading	AO1 FS	10000 [50.0]	100 to 15000 [0.5 to 75.0]	FPM [m/s]
AO2 Assignment (/SI and /DI)	AO2 ASGN	TEMP (Temperature)	ALRM (Alarm) or TRBL (System Trouble)	
AO2 Assignment (/An)	AO2 ASGN	TEMP (Temperature)	ALRM, FA (Fan Alarm) or TRBL	
AO2 Unit of Measure	AO2 UM	F [C]	None	°F [°C]
AO2 Minimum Scale Reading	AO2 MS	-20 [-30]	-50 to 160 [-50 to 70]	°F [°C]
AO2 Full Scale Reading	AO2 FS	160 [70]	-50 to 160 [-50 to 70]	°F [°C]
RS-485 Network	BACnet MS/TP or Modbus RTU (requires configuration)			

Refer to the O&M Manual for more information and/or additional parameter defaults, settings and ranges.

STARTUP INSTRUCTIONS:

1. Verify that the sensor probes are properly installed and secured in the fan inlet(s).

⚠ *Improperly installed probes will compromise the installed accuracy of the device and degrade system performance.*

2. Verify that the transmitter is installed and wired in accordance with the *GTC108-F Wiring Guide* provided with the transmitter and power is provided to the transmitter.
3. Make sure the ductwork is clean and free of debris prior to fan startup.
4. Move the power switch to the "ON" position. Power-up faults, if detected, are displayed on the LCD. If any power up faults are detected, resolve all conflicts or contact EBTRON customer service at 1-800-232-8766 before proceeding..

⚠ *If extension cables have been added, the extension cable length must be entered into the transmitter. Refer to the Operations and Maintenance Manual for more information.*

5. The transmitter is fully functional as a factory calibrated airflow and temperature measurement device in I-P units (ft, FPM, CFM °F). Airflow (FPM) and temperature (°F) are displayed on the LCD.

ⓘ *Airflow is displayed in FPM in lieu of CFM because the exact area where the fan inlet probes are located is not known until installation is complete.*

ⓘ *If SI units are required, refer to the the Operations and Maintenance Manual.*

ⓘ *The factory default airflow output is set to actual airflow (FPM, CFM). If standard (mass) airflow (SFPM, SCFM) is required, refer to the Operations and Maintenance Manual.*

6. It is recommended that the area of the fan inlet is entered manually or calculated using the fan area wizard tool (FAN WIZ). The total area parameter, AREA, can also be entered manually directly through the SETTINGS menu.

ⓘ *The area is always determined by using the diameter of the inlet at the leading (upstream) side of the sensor node housing.*

ⓘ *Refer to the Operations and Maintenance Manual if manual entry of the AREA parameter is desired.*

⚠ *Failure to use the correct area will result in volumetric airflow (CFM) measurement error and degrade system performance.*

7. To use the FAN WIZ tool, press the ↑↓ arrow buttons simultaneously to enter the MAIN MENU. The SETTINGS menu is displayed. Press the ↓ button until the TOOLS menu category is visible. Press the ENT button to select the top of the TOOLS submenu category. Press the ↓ button until the FAN WIZ tool is visible. Press the ENT button to execute the tool. Select "YES" when the SAVE prompt is displayed. The display will be changed from FPM to CFM and the AREA parameter will be updated.
8. If analog output signals are used continue to step 9, otherwise skip to step 13.
9. Verify that the transmitter is configured to match the analog input requirements of the host controller. The output signal type (mA or VDC) of AO1 and AO2 are determined by switches SW1 (AO1) and SW2 (AO2) on the output card. The transmitter is factory set to 4-20mA. Verify the switches for the proper output signal type.

⚠ *The 4-20mA is "4-wire type" and not loop powered. Do not apply any excitation voltage to the output of the transmitter.*

10. Press the ESC and ↑ buttons simultaneously to display the transmitter setting for the AOUT1 (AO1) parameter. Use the ↓ button to view the setting for the AOUT (AO2) parameter. If the output signal type (mA or VDC) is not correct, position switches SW1 and/or SW2 on the option card board for the appropriate signal type. If VDC is selected and a 0-5V output is required in lieu of 0-10V, use the ↑↓ buttons until AOUT1 is visible. Press the ENT button and use the ↑↓ buttons to select 0-5V. Press the ENT button to execute and display the change. Do the same for AOUT2, if required. Press the ESC button to return to normal operation.
11. The analog output signal for airflow (AO1) is linear. The minimum scale reading (0% output) of the airflow signal is fixed at 0 and the full scale reading (100% output) is factory set to 10,000 FPM.

Multiply the default full scale velocity (FPM)by the correct total area (i.e. AREA parameter) of the measurement location to determine the full-scale or span (CFM) for the B.A.S. to avoid additional field configuration. EBTRON airflow measurement device accuracy is percent-of-reading. Changing the full scale reading does not affect measurement accuracy.

ⓘ *If custom airflow scaling or unit of measure are required, refer to the Operations and Maintenance Manual.*

12. The analog output signal for temperature (AO2) is linear. The minimum scale reading (0% output) is set to -20 ºF and full scale reading (100% output) is set to 160 ºF.

ⓘ *If custom temperature scaling is required, refer to the Operations and Maintenance Manual.*

ⓘ *AO2 can be configured for a high/low airflow alarm or system status alarm. AO2 can also be configured for the tan alarm if the /An fan array model is provided. Refer to the Operations and Maintenance Manual for more information.*

13. If the RS-485 network connection is required continue to step 14, otherwise skip to step 16.
14. Press the ↑↓ arrow buttons simultaneously to enter the MAIN MENU. The SETTINGS menu is displayed. Press the ENT button to select the top of the SETTINGS submenu category. Press the ↓ button until the RS-485 submenu category is visible. Press the ENT button to enter the RS-485 submenu. The NET OUT parameter is visible. Press the ENT button and set the NET OUT parameter to BACNET (BACnet MS/TP) or MODBUS (Modbus RTU). Press the ENT button to save the selection. Use the ↓ arrow button and continue through the RS-485 submenu to configure the remaining network parameters. Enable network communications by setting the RS485 COM parameter to "ON" and press the ENT button. Press the ESC button twice to return to normal operation.
15. Refer to the *Operations and Maintenance Manual* for detailed information on the BACnet Objects and Modbus Registers supported by this device.
16. Fan array models with the /An suffix can be configured to ignore a fan when an individual fan fault is detected. Refer to the *Operations and Maintenance Manual* for more information.
17. Startup is complete! If additional customization is desired, consult the *Operation and Maintenance Manual*.

VERIFICATION

Many installations require third-party airflow verification. If the airflow measuring device is within the measurement uncertainty of the verification technique, EBTRON strongly recommends that no field adjustment correction is made. EBTRON airflow measurement devices are factory calibrated to NIST traceable standards. Field adjustment is not recommended when installed in accordance to published guidelines.

If field adjustment is required, refer to the *Operation and Maintenance Manual*.

ⓘ *Transmitters can be field adjusted to match a third-party measurement. Adjusted field measurements typically result in comparative readings within ±3% of the third-party measurement. Be advised that the third-party measurement may have uncertainties greater than or equal to ±10% and should only be used to adjust the airflow measurement if the discrepancy is greater than the uncertainty of the third-party source.*

Variability in field mounting and fan inlet entry conditions may affect the installed accuracy of the measurement device. When airflow measurement devices are installed in the supply and return airflow paths for airflow tracking, set the system to 100% recirculation mode with no intake or relief at the air handling unit. Confirm that the intake and relief air dampers are closed and leakage is negligible. Confirm that the recirculation (return) air damper is fully open. If a return fan is installed, modulate the supply and return fan together in a manner that avoids under– or over-pressurization of the relief and intake plenums. Adjust one location to match the other using the field adjust wizard (FAW) at one or two airflow rates. This technique has been show to significantly improve tracking performance on marginal installations. Select the best measurement location as the reference. Refer to the Operations and Maintenance Manual for more information.

FOR MORE INFORMATION ….

Operations and Maintenance Manual.

The *Operations and Maintenance Manual* is a comprehensive reference document that contains information on installation, startup, custom configuration, built-in tools, diagnostics, troubleshooting and maintenance.

NEED MORE HELP?

EBTRON Customer Service

For toll-free factory support call 1-800-2EBTRON (1-800-232-8766), Monday through Thursday 8:00 AM to 4:30 PM and Friday 8:00 AM to 2:00 PM eastern time.

Your Local EBTRON Representative

Visit EBTRON.com for the name and contact information of your local representative.

Advantage IV (A4) GTC108e-F STARTUP GUIDE

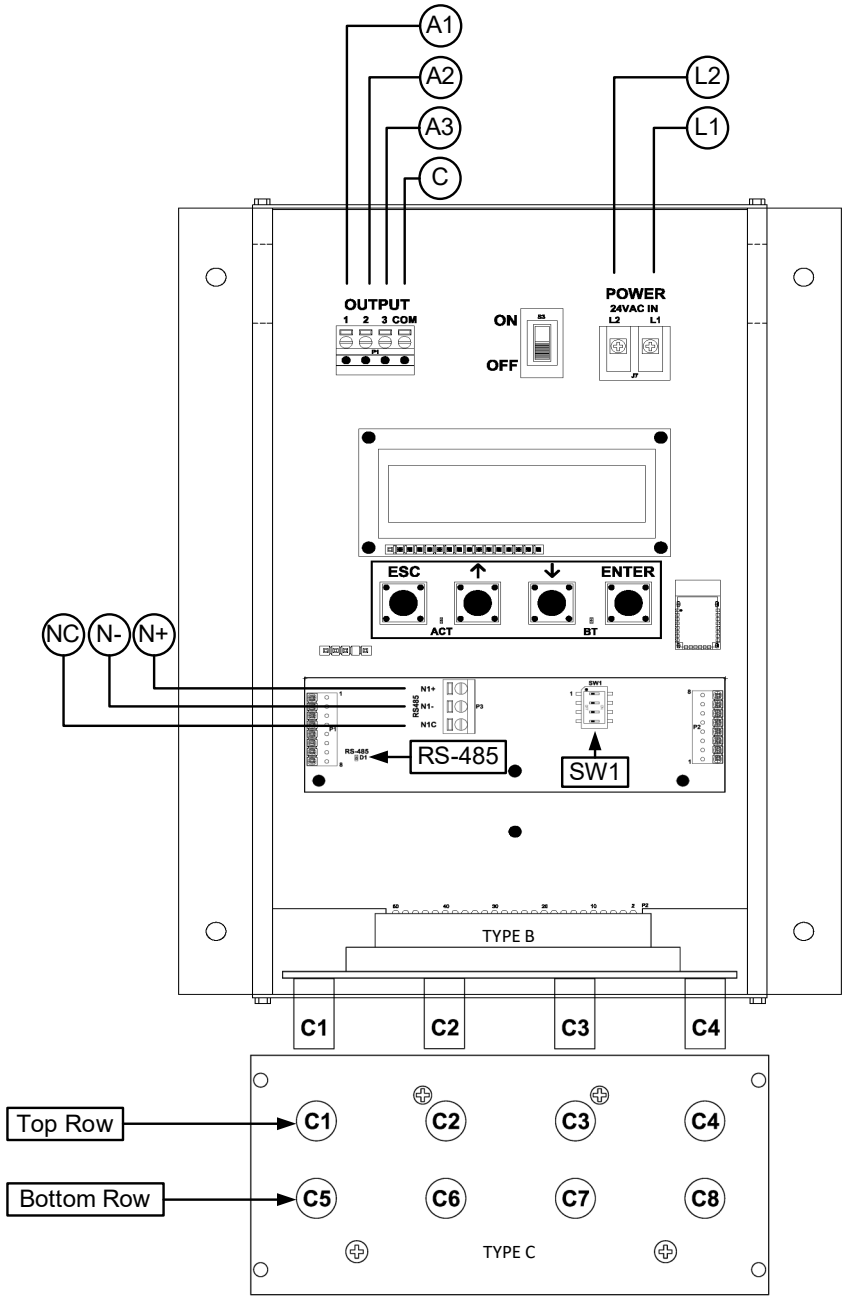

GTC108e-F Parameters - Factory Defaults and Optional Settings/Ranges

Description	Parameter	Default	Optional Settings/Ranges	Units
System of Units	SYS	I-P (US customary)	SI (metric)	
Airflow Calculation Method	AIRFLOW	ACT (actual)	STD (standard mass flow)	
Altitude (for actual flow correction)	ALT	0	0 to 20000 [0 to 6000]	ft [m]
Low Limit Airflow Cutoff	LLIMIT	0 FPM	0 to 500 FPM [0.0 to 2.5 m/s]	
Area	AREA	*{Null}* requires entry	0.00 to 9999.99 [0.000 to 999.999]	sq ft [sq m]
AO1, AO2 and AO3 Type	AOUT	4-20mA	0-10V, 0-5 V	
AO1 Assignment	AO1 ASGN	AF (Airflow)	None	
AO1 Unit of Measure	AO1 UM	FPM [m/s]	CFM [L/s]	
AO1 Minimum Scale Reading	AO1 MS	0	None	FPM [m/s]
AO1 Full Scale Reading	AO1 FS	10000 [50.0]	100 to 15000 [0.5 to 75.0]	FPM [m/s]
AO2 Assignment (/SI and /DI)	AO2 ASGN	TEMP (Temperature)	ALRM (Alarm) or TRBL (System Trouble)	
AO2 Assignment (/An)	AO2 ASGN	TEMP (Temperature)	ALRM, FA (Fan Alarm) or TRBL	
AO2 Unit of Measure	AO2 UM	F [C]	None	°F [°C]
AO2 Minimum Scale Reading	AO2 MS	-20 [-30]	-50 to 160 [-50 to 70]	°F [°C]
AO2 Full Scale Reading	AO2 FS	160 [70]	-50 to 160 [-50 to 70]	°F [°C]
AO3 Assignment	AO3 ASGN	N/A	N/A	
RS-485 Network	BACnet MS/TP or Modbus RTU (requires configuration)			

Refer to the O&M Manual for more information and/or additional parameter defaults, settings and ranges.

STARTUP INSTRUCTIONS:

1. Verify that the sensor probes are properly installed and secured in the fan inlet(s).

⚠ *Improperly installed probes will compromise the installed accuracy of the device and degrade system performance.*

2. Verify that the transmitter is installed and wired in accordance with the *GTC108e-F Wiring Guide* provided with the transmitter and power is provided to the transmitter.
3. Make sure the ductwork is clean and free of debris prior to fan startup.
4. Move the power switch to the "ON" position. Power-up faults, if detected, are displayed on the LCD. If any power up faults are detected, resolve all conflicts or contact EBTRON customer service at 1-800-232-8766 before proceeding..

⚠ *If extension cables have been added, the extension cable length must be entered into the transmitter. Refer to the Operations and Maintenance Manual for more information.*

5. The transmitter is fully functional as a factory calibrated airflow and temperature measurement device in I-P units (ft, FPM, CFM °F). Airflow (FPM) and temperature (°F) are displayed on the LCD.

ⓘ *Airflow is displayed in FPM in lieu of CFM because the exact area where the fan inlet probes are located is not known until installation is complete.*

ⓘ *If SI units are required, refer to the Operations and Maintenance Manual.*

ⓘ *The factory default airflow output is set to actual airflow (FPM, CFM). If standard (mass) airflow (SFPM, SCFM) is required, refer to the Operations and Maintenance Manual.*

6. It is recommended that the area of the fan inlet is entered manually or calculated using the fan area wizard tool (FAN WIZ). The total area parameter, AREA, can also be entered manually directly through the SETTINGS menu.

ⓘ *The area is always determined by using the diameter of the inlet at the leading (upstream) side of the sensor node housing.*

ⓘ *Refer to the Operations and Maintenance Manual if manual entry of the AREA parameter is desired.*

⚠ *Failure to use the correct area will result in volumetric airflow (CFM) measurement error and degrade system performance.*

7. To use the FAN WIZ tool, press the ↑↓ arrow buttons simultaneously to enter the MAIN MENU. The SETTINGS menu is displayed. Press the ↓ button until the TOOLS menu category is visible. Press the ENT button to select the top of the TOOLS submenu category. Press the ↓ button until the FAN WIZ tool is visible. Press the ENT button to execute the tool. Select "YES" when the SAVE prompt is displayed. The display will be changed from FPM to CFM and the AREA parameter will be updated.
8. If analog output signals are used continue to step 9, otherwise skip to step 13.
9. The output signal type and range (4-20 mA, 0-5 VDC or 0-10VDC) of AO1 and AO2 is determined by the AOUT parameter. The transmitter is factory set to 4-20mA.

⚠ *The 4-20mA is "4-wire type" and not loop powered. Do not apply any excitation voltage to the output of the transmitter.*

10. Verify that the transmitter is configured to match the analog input requirements of the host controller. Press the ESC and ↑ buttons simultaneously to display the transmitter setting for the AOUT parameter. If the AOUT parameter is not correct, press the ENT button and use the ↑ and ↓ buttons to set AOUT. Press the ENT button to execute and display the change. Press the ESC button to return to normal operation.
11. The analog output signal for airflow (AO1) is linear. The minimum scale reading (0% output) of the airflow signal is fixed at 0 and the full scale reading (100% output) is factory set to 10,000 FPM.

Multiply the default full scale velocity (FPM)by the correct total area (i.e. AREA parameter) of the measurement location to determine the full-scale or span (CFM) for the B.A.S. to avoid additional field configuration. EBTRON airflow measurement device accuracy is percent-of-reading. Changing the full scale reading does not affect measurement accuracy.

ⓘ *If custom airflow scaling or unit of measure are required, refer to the Operations and Maintenance Manual.*

12. The analog output signal for temperature (AO2) is linear. The minimum scale reading (0% output) is set to -20 ºF and full scale reading (100% output) is set to 160 ºF.

ⓘ *If custom temperature scaling is required, refer to the Operations and Maintenance Manual.*

ⓘ *AO2 can be configured for a high/low airflow alarm or system status alarm. AO2 can also be configured for the fan alarm if the /An fan array model is provided. Refer to the Operations and Maintenance Manual for more information.*

13. If the RS-485 network connection is required continue to step 14, otherwise skip to step 16.
14. Press the ↑↓ arrow buttons simultaneously to enter the MAIN MENU. The SETTINGS menu is displayed. Press the ENT button to select the top of the SETTINGS submenu category. Press the ↓ button until the RS-485 submenu category is visible. Press the ENT button to enter the RS-485 submenu. The NET OUT parameter is visible. Press the ENT button and set the NET OUT parameter to BACNET (BACnet MS/TP) or MODBUS (Modbus RTU). Press the ENT button to save the selection. Use the ↓ arrow button and continue through the RS-485 submenu to configure the remaining network parameters. Enable network communications by setting the RS485 COM parameter to "ON" and press the ENT button. Press the ESC button twice to return to normal operation.
15. Refer to the *Operations and Maintenance Manual* for detailed information on the BACnet Objects and Modbus Registers supported by this device.
16. Fan array models with the /An suffix can be configured to ignore a fan when an individual fan fault is detected. Refer to the *Operations and Maintenance Manual* for more information.
17. Startup is complete! If additional customization is desired, consult the *Operation and Maintenance Manual*.

VERIFICATION

Many installations require third-party airflow verification. If the airflow measuring device is within the measurement uncertainty of the verification technique, EBTRON strongly recommends that no field adjustment correction is made. EBTRON airflow measurement devices are factory calibrated to NIST traceable standards. Field adjustment is not recommended when installed in accordance to published guidelines.

If field adjustment is required, refer to the *Operation and Maintenance Manual*.

ⓘ *Transmitters can be field adjusted to match a third-party measurement. Adjusted field measurements typically result in comparative readings within ±3% of the third-party measurement. Be advised that the third-party measurement may have uncertainties greater than or equal to ±10% and should only be used to adjust the airflow measurement if the discrepancy is greater than the uncertainty of the third-party source.*

Variability in field mounting and fan inlet entry conditions may affect the installed accuracy of the measurement device. When airflow measurement devices are installed in the supply and return airflow paths for airflow tracking, set the system to 100% recirculation mode with no intake or relief at the air handling unit. Confirm that the intake and relief air dampers are closed and leakage is negligible. Confirm that the recirculation (return) air damper is fully open. If a return fan is installed, modulate the supply and return fan together in a manner that avoids under– or over-pressurization of the relief and intake plenums. Adjust one location to match the other using the field adjust wizard (FAW) at one or two airflow rates. This technique has been show to significantly improve tracking performance on marginal installations. Select the best measurement location as the reference. Refer to the Operations and Maintenance Manual for more information.

NEED MORE HELP?

EBTRON Customer Service

For toll-free factory support call 1-800-2EBTRON (1-800-232-8766), Monday through Thursday 8:00 AM to 4:30 PM and Friday 8:00 AM to 2:00 PM eastern time.

Your Local EBTRON Representative

Visit EBTRON.com for the name and contact information of your local representative.

Advantage IV (A4) GTD108-F STARTUP GUIDE

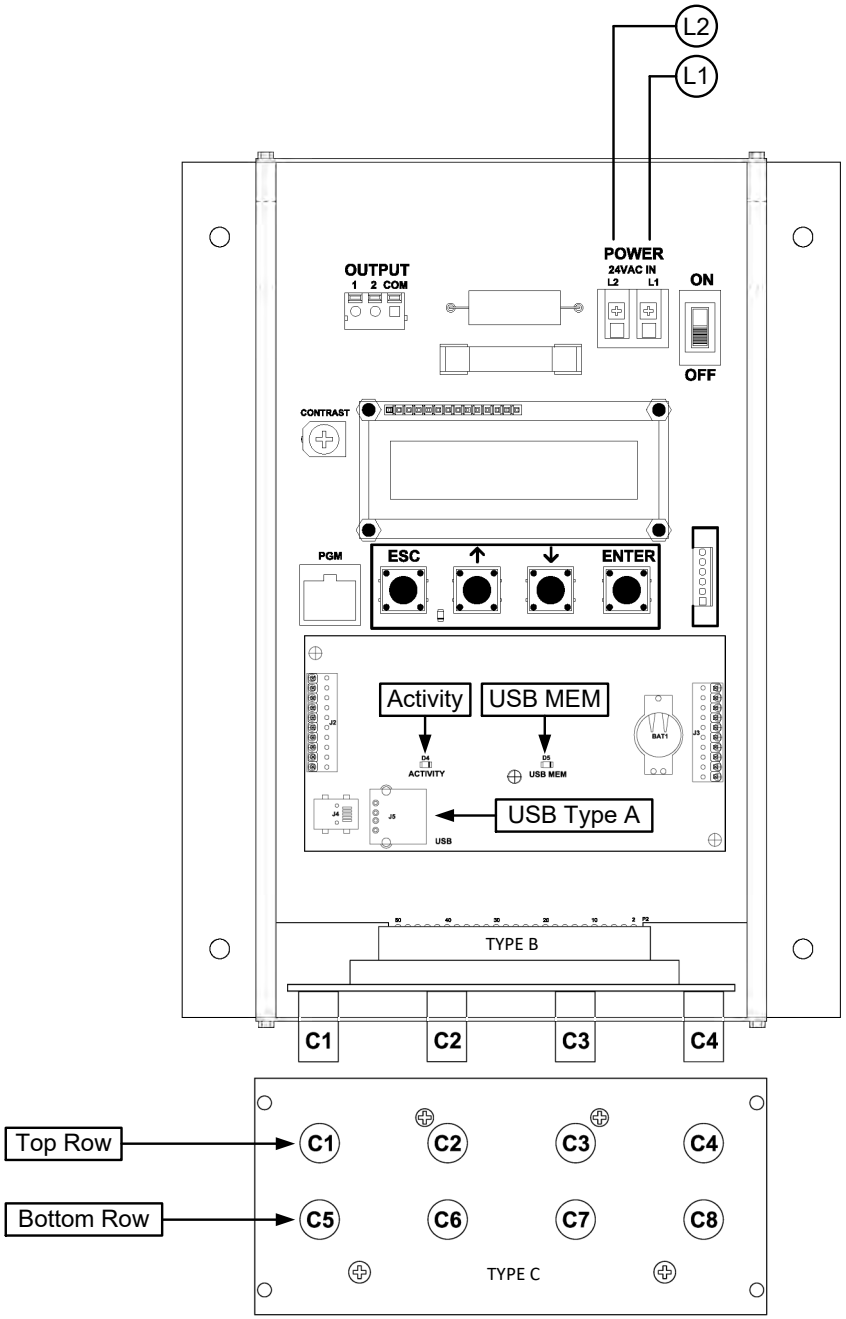

GTD108-F Parameters - Factory Defaults and Optional Settings/Ranges

Description	Parameter	Default	Optional Settings/Ranges	Units
System of Units	SYS	I-P (US customary)	SI (metric)	
Airflow Calculation Method	AIRFLOW	ACT (actual)	STD (standard mass flow)	
Altitude (for actual flow correction)	ALT	0	0 to 20000 [0 to 6000]	ft [m]
Low Limit Airflow Cutoff	LLIMIT	0 FPM	0 to 500 FPM [0.0 to 2.5 m/s]	
Area	AREA	*{Null}* requires entry	0.00 to 9999.99 [0.000 to 999.999]	sq ft [sq m]
Datalogger	Requires a Type A USB Datalogger "thumb drive" (see below)			
USB Port (turn off before removal)	USB WRITE	ON	OFF	

Refer to the O&M Manual for more information and/or additional parameter defaults, settings and ranges.

STARTUP INSTRUCTIONS:

1. Verify that the sensor probes are properly installed and secured in the fan inlet(s).

⚠ *Improperly installed probes will compromise the installed accuracy of the device and degrade system performance.*

2. Verify that the transmitter is installed and wired in accordance with the *GTD108-F Wiring Guide* provided with the transmitter and power is provided to the transmitter.
3. Make sure the ductwork is clean and free of debris prior to fan startup.
4. Move the power switch to the "ON" position. Power-up faults, if detected, are displayed on the LCD. If any power up faults are detected, resolve all conflicts or contact EBTRON customer service at 1-800-232-8766 before proceeding..

⚠ *If extension cables have been added, the extension cable length must be entered into the transmitter. Refer to the Operations and Maintenance Manual for more information.*

5. The transmitter is fully functional as a factory calibrated airflow and temperature measurement device in I-P units (ft, FPM, CFM °F). Airflow (CFM) and temperature (°F) are displayed on the LCD.

ⓘ *If SI units are required, refer to the the Operations and Maintenance Manual.*

ⓘ *The factory default airflow output is set to actual airflow (FPM, CFM). If standard (mass) airflow (SFPM, SCFM) is required, refer to the Operations and Maintenance Manual.*

6. It is recommended that the area of the fan inlet is entered manually or calculated using the fan area wizard tool (FAN WIZ). The total area parameter, AREA, can also be entered manually directly through the SETTINGS menu.

ⓘ *The area is always determined by using the diameter of the inlet at the leading (upstream) side of the sensor node housing.*

ⓘ *Refer to the Operations and Maintenance Manual if manual entry of the AREA parameter is desired.*

⚠ *Failure to use the correct area will result in volumetric airflow (CFM) measurement error and degrade system performance. If the area parameter must be changed, refer to the Operations and Maintenance Manual.*

7. To use the FAN WIZ tool, press the ↑↓ arrow buttons simultaneously to enter the MAIN MENU. The SETTINGS menu is displayed. Press the ↓ button until the TOOLS menu category is visible. Press the ENT button to select the top of the TOOLS submenu category. Press the ↓ button until the FAN WIZ tool is visible. Press the ENT button to execute the tool. Select "YES" when the SAVE prompt is displayed. The display will be changed from FPM to CFM and the AREA parameter will be updated.

8. Transmitters with a USB data logger log the average airflow, average temperature, individual sensor node airflow and the individual sensor node temperature at 5-minute intervals using Universal Time Coordinated (UTC) based on an onboard real-time clock, whenever power is applied to the transmitter. Data files are automatically appended on power-up. The time zone and interval can be modified by the user using EB-Link software.
9. To insert a USB memory device ("thumb drive") for data logging continue to step 10, otherwise skip to step 13.
10. Install the USB memory device into the USB connector on the option card to start logging data.

It is a good practice to set the transmitter power switch to the "OFF" position before inserting the USB memory device.

11. The USB port must be enabled to log data.
12. Enable the USB WRITE parameter to start logging data. Press the ↑↓ arrow buttons simultaneously to enter the MAIN MENU. The SETTINGS menu is displayed. Press the ENT button to select the top of the SETTINGS submenu category. Press the ↓ button until the USB submenu category is visible. Press the ENT button. The USB WRITE parameter is visible. Press the ENT button and use the ↑↓ buttons to select ON. Press the ENT button to save the selection. Press the ESC button twice to return to normal operation.

Transmitters are shipped with the USB port parameter USB WRITE set to "ON".

13. To remove the USB memory device and/or stop data logging continue to step 14, otherwise skip to step 16.
14. Disable the USB WRITE parameter stop logging data. Press the ↑↓ arrow buttons simultaneously to enter the MAIN MENU. The SETTINGS menu is displayed. Press the ENT button to select the top of the SETTINGS submenu category. Press the ↓ button until the USB submenu category is visible. Press the ENT button. The USB WRITE parameter is visible. Press the ENT button and use the ↑↓ buttons to select OFF. Press the ENT button to save the selection. Press the ESC button twice to return to normal operation.

Always set the USB WRITE parameter to "OFF" before removing the USB memory device to avoid data loss/and or damage.

15. Remove the USB memory device from the USB port, if desired.

It is a good practice to set the transmitter power switch to the "OFF" position before removing the USB memory device.

16. Fan array models with the /An suffix can be configured to ignore a fan when an individual fan fault is detected. Refer to the Operations and Maintenance Manual for more information.
17. Startup is complete! If additional customization is desired, consult the *Operation and Maintenance Manual*.

VERIFICATION

Many installations require third-party airflow verification. If the airflow measuring device is within the measurement uncertainty of the verification technique, EBTRON strongly recommends that no field adjustment correction is made. EBTRON airflow measurement devices are factory calibrated to NIST traceable standards. Field adjustment is not recommended when installed in accordance to published guidelines.

If field adjustment is required, refer to the *Operation and Maintenance Manual*.

If minimum placement guidelines cannot be achieved, installed accuracy may be compromised. Transmitters can be field adjusted to match a third-party measurement. Adjusted field measurements typically result in comparative readings within ±3% of the third-party measurement. Be advised that the third-party measurement may have uncertainties greater than or equal to ±10% and should only be used to adjust the airflow measurement device if the probes do not meet minimum placement requirements or the discrepancy is greater than the uncertainty of the third-party source.

Variability in field mounting and fan inlet entry conditions may affect the installed accuracy of the measurement device. When airflow measurement devices are installed in the supply and return airflow paths for airflow tracking, set the system to 100% recirculation mode with no intake or relief at the air handling unit. Confirm that the intake and relief air dampers are closed and leakage is negligible. Confirm that the recirculation (return) air damper is fully open. If a return fan is installed, modulate the supply and return fan together in a manner that avoids under– or over-pressurization of the relief and intake plenums. Adjust one location to match the other using the field adjust wizard (FAW) at one or two airflow rates. This technique has been show to significantly improve tracking performance on marginal installations. Select the best measurement location as the reference. Refer to the Operations and Maintenance Manual for more information.

FOR MORE INFORMATION ….

Operations and Maintenance Manual.

The *Operations and Maintenance Manual* is a comprehensive reference document that contains information on installation, startup, custom configuration, built-in tools, diagnostics, troubleshooting and maintenance.

NEED MORE HELP?

EBTRON Customer Service

For toll-free factory support call 1-800-2EBTRON (1-800-232-8766), Monday through Thursday 8:00 AM to 4:30 PM and Friday 8:00 AM to 2:00 PM eastern time.

Your Local EBTRON Representative

Visit EBTRON.com for the name and contact information of your local representative.

Advantage IV (A4) GTF108e-F STARTUP GUIDE

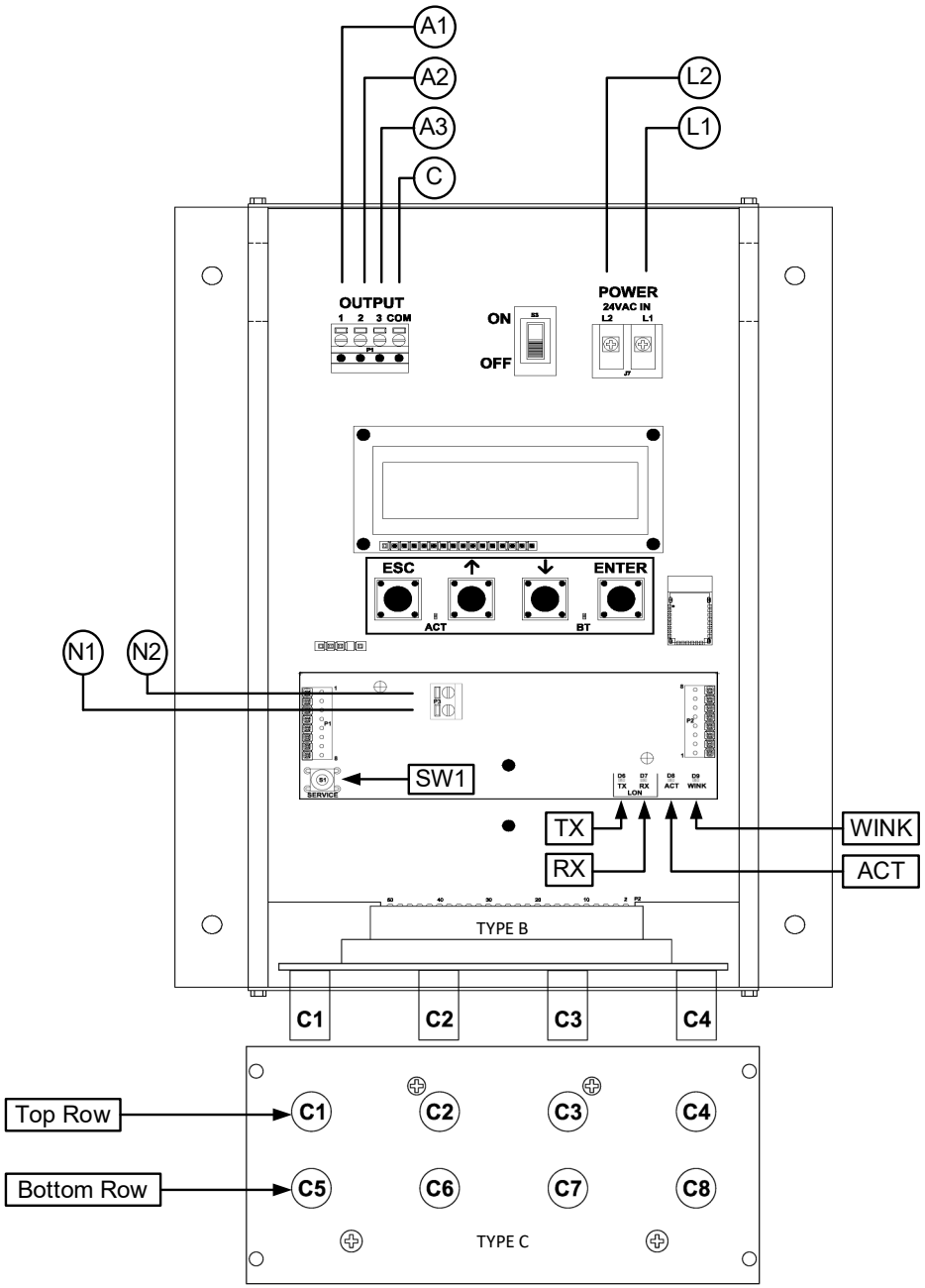

GTF108e-F Parameters - Factory Defaults and Optional Settings/Ranges

Description	Parameter	Default	Optional Settings/Ranges	Units
System of Units	SYS	I-P (US customary)	SI (metric)	
Airflow Calculation Method	AIRFLOW	ACT (actual)	STD (standard mass flow)	
Altitude (for actual flow correction)	ALT	0	0 to 20000 [0 to 6000]	ft [m]
Low Limit Airflow Cutoff	LLIMIT	0 FPM	0 to 500 FPM [0.0 to 2.5 m/s]	
Area	AREA	*{Null}* requires entry	0.00 to 9999.99 [0.000 to 999.999]	sq ft [sq m]
AO1, AO2 and AO3 Type	AOUT	4-20mA	0-10V, 0-5 V	
AO1 Assignment	AO1 ASGN	AF (Airflow)	None	
AO1 Unit of Measure	AO1 UM	FPM [m/s]	CFM [L/s]	
AO1 Minimum Scale Reading	AO1 MS	0	None	FPM [m/s]
AO1 Full Scale Reading	AO1 FS	10000 [50.0]	100 to 15000 [0.5 to 75.0]	FPM [m/s]
AO2 Assignment (/SI and /DI)	AO2 ASGN	TEMP (Temperature)	ALRM (Alarm) or TRBL (System Trouble)	
AO2 Assignment (/An)	AO2 ASGN	TEMP (Temperature)	ALRM, FA (Fan Alarm) or TRBL	
AO2 Unit of Measure	AO2 UM	F [C]	None	°F [°C]
AO2 Minimum Scale Reading	AO2 MS	-20 [-30]	-50 to 160 [-50 to 70]	°F [°C]
AO2 Full Scale Reading	AO2 FS	160 [70]	-50 to 160 [-50 to 70]	°F [°C]
AO3 Assignment	AO3 ASGN	N/A	N/A	
Lon Network xif File Link	https://ebtron.com/wp-content/uploads/software/EBTRON_108e.xif			

Refer to the O&M Manual for more information and/or additional parameter defaults, settings and ranges.

STARTUP INSTRUCTIONS:

1. Verify that the sensor probes are properly installed and secured in the fan inlet(s).

⚠ *Improperly installed probes will compromise the installed accuracy of the device and degrade system performance.*

2. Verify that the transmitter is installed and wired in accordance with the *GTF108e-F Wiring Guide* provided with the transmitter and power is provided to the transmitter.
3. Make sure the ductwork is clean and free of debris prior to fan startup.
4. Move the power switch to the "ON" position. Power-up faults, if detected, are displayed on the LCD. If any power up faults are detected, resolve all conflicts or contact EBTRON customer service at 1-800-232-8766 before proceeding..

⚠ *If extension cables have been added, the extension cable length must be entered into the transmitter. Refer to the Operations and Maintenance Manual for more information.*

5. The transmitter is fully functional as a factory calibrated airflow and temperature measurement device in I-P units (ft, FPM, CFM °F). Airflow (CFM) and temperature (°F) are displayed on the LCD.

ⓘ *Airflow is displayed in FPM in lieu of CFM because the exact area where the fan inlet probes are located is not known until installation is complete.*

ⓘ *If SI units are required, refer to the Operations and Maintenance Manual.*

ⓘ *The factory default airflow output is set to actual airflow (FPM, CFM). If standard (mass) airflow (SFPM, SCFM) is required, refer to the Operations and Maintenance Manual.*

6. It is recommended that the area of the fan inlet is entered manually or calculated using the fan area wizard tool (FAN WIZ). The total area parameter, AREA, can also be entered manually directly through the SETTINGS menu.

ⓘ The area is always determined by using the diameter of the inlet at the leading (upstream) side of the sensor node housing.

ⓘ Refer to the Operations and Maintenance Manual if manual entry of the AREA parameter is desired.

⚠ Failure to use the correct area will result in volumetric airflow (CFM) measurement error and degrade system performance.

7. To use the FAN WIZ tool, press the ↑↓ arrow buttons simultaneously to enter the MAIN MENU. The SETTINGS menu is displayed. Press the ↓ button until the TOOLS menu category is visible. Press the ENT button to select the top of the TOOLS submenu category. Press the ↓ button until the FAN WIZ tool is visible. Press the ENT button to execute the tool. Select "YES" when the SAVE prompt is displayed. The display will be changed from FPM to CFM and the AREA parameter will be updated.
8. If analog output signals are used continue to step 9, otherwise skip to step 13.
9. The output signal type and range (4-20 mA, 0-5 VDC or 0-10VDC) of AO1 and AO2 is determined by the AOUT parameter. The transmitter is factory set to 4-20mA.

⚠ *The 4-20mA is "4-wire type" and not loop powered. Do not apply any excitation voltage to the output of the transmitter.*

10. Verify that the transmitter is configured to match the analog input requirements of the host controller. Press the ESC and ↑ buttons simultaneously to display the transmitter setting for the AOUT parameter. If the AOUT parameter is not correct, press the ENT button and use the ↑ and ↓ buttons to set AOUT. Press the ENT button to execute and display the change. Press the ESC button to return to normal operation.
11. The analog output signal for airflow (AO1) is linear. The minimum scale reading (0% output) of the airflow signal is fixed at 0 and the full scale reading (100% output) is factory set to 10,000 FPM.

Multiply the default full scale velocity (FPM)by the correct area of the measurement location to determine the full-scale or span (CFM) for the B.A.S. to avoid field configuration. EBTRON airflow measurement device accuracy is percent-of-reading. Changing the full scale reading does not affect measurement accuracy.

ⓘ *If custom airflow scaling or unit of measure are required, refer to the Operations and Maintenance Manual.*

12. The analog output signal for temperature (AO2) is linear. The minimum scale reading (0% output) is set to -20 ºF and full scale reading (100% output) is set to 160 ºF.

ⓘ *If custom temperature scaling is required, refer to the Operations and Maintenance Manual.*

ⓘ *AO2 can be configured for a high/low airflow alarm or system status alarm. AO2 can also be configured for the fan alarm if the /An fan array model is provided. Refer to the Operations and Maintenance Manual for more information.*

13. If the LON network connection is required continue to step 14, otherwise skip to step 16.
14. LON transmitters are provided with a full featured LonWorks compatible interface. No transmitter configuration is required.

ⓘ *A "Service" push-button, SW1, is provided for device commissioning. Once the device is recognized commissioning can be completed by uploading the parameters from the device.*

15. Download the external interface file (.xif) if required by the installation software:
    https://ebtron.com/wp-content/uploads/software/EBTRON_108e.xif

ⓘ *A "Wink" LED is provided for easy device identification.*

ⓘ *An "Activity" LED and separate transmit and receive "TX" and "RX" indicators provide visual indication of transmitter and communication status. The "Activity" LED flashes on for 1 second, off for 1 second when the card is commissioned and online. The "Activity" LED remains illuminated constantly if there is an error.*

16. Fan array models with the /An suffix can be configured to ignore a fan when an individual fan fault is detected. Refer to the Operations and Maintenance Manual for more information.
17. Startup is complete! If additional customization is desired, consult the *Operation and Maintenance Manual*.

VERIFICATION

Many installations require third-party airflow verification. If the airflow measuring device is within the measurement uncertainty of the verification technique, EBTRON strongly recommends that no field adjustment correction is made. EBTRON airflow measurement devices are factory calibrated to NIST traceable standards. Field adjustment is not recommended when installed in accordance to published guidelines.

If field adjustment is required, refer to the *Operation and Maintenance Manual*.

ⓘ *Transmitters can be field adjusted to match a third-party measurement. Adjusted field measurements typically result in comparative readings within ±3% of the third-party measurement. Be advised that the third-party measurement may have uncertainties greater than or equal to ±10% and should only be used to adjust the airflow measurement if the discrepancy is greater than the uncertainty of the third-party source.*

Variability in field mounting and fan inlet entry conditions may affect the installed accuracy of the measurement device. When airflow measurement devices are installed in the supply and return airflow paths for airflow tracking, set the system to 100% recirculation mode with no intake or relief at the air handling unit. Confirm that the intake and relief air dampers are closed and leakage is negligible. Confirm that the recirculation (return) air damper is fully open. If a return fan is installed, modulate the supply and return fan together in a manner that avoids under– or over-pressurization of the relief and intake plenums. Adjust one location to match the other using the field adjust wizard (FAW) at one or two airflow rates. This technique has been show to significantly improve tracking performance on marginal installations. Select the best measurement location as the reference. Refer to the Operations and Maintenance Manual for more information.

NEED MORE HELP?

EBTRON Customer Service

For toll-free factory support call 1-800-2EBTRON (1-800-232-8766), Monday through Thursday 8:00 AM to 4:30 PM and Friday 8:00 AM to 2:00 PM eastern time.

Your Local EBTRON Representative

Visit EBTRON.com for the name and contact information of your local representative.

Advantage IV (A4) GTL108-F STARTUP GUIDE

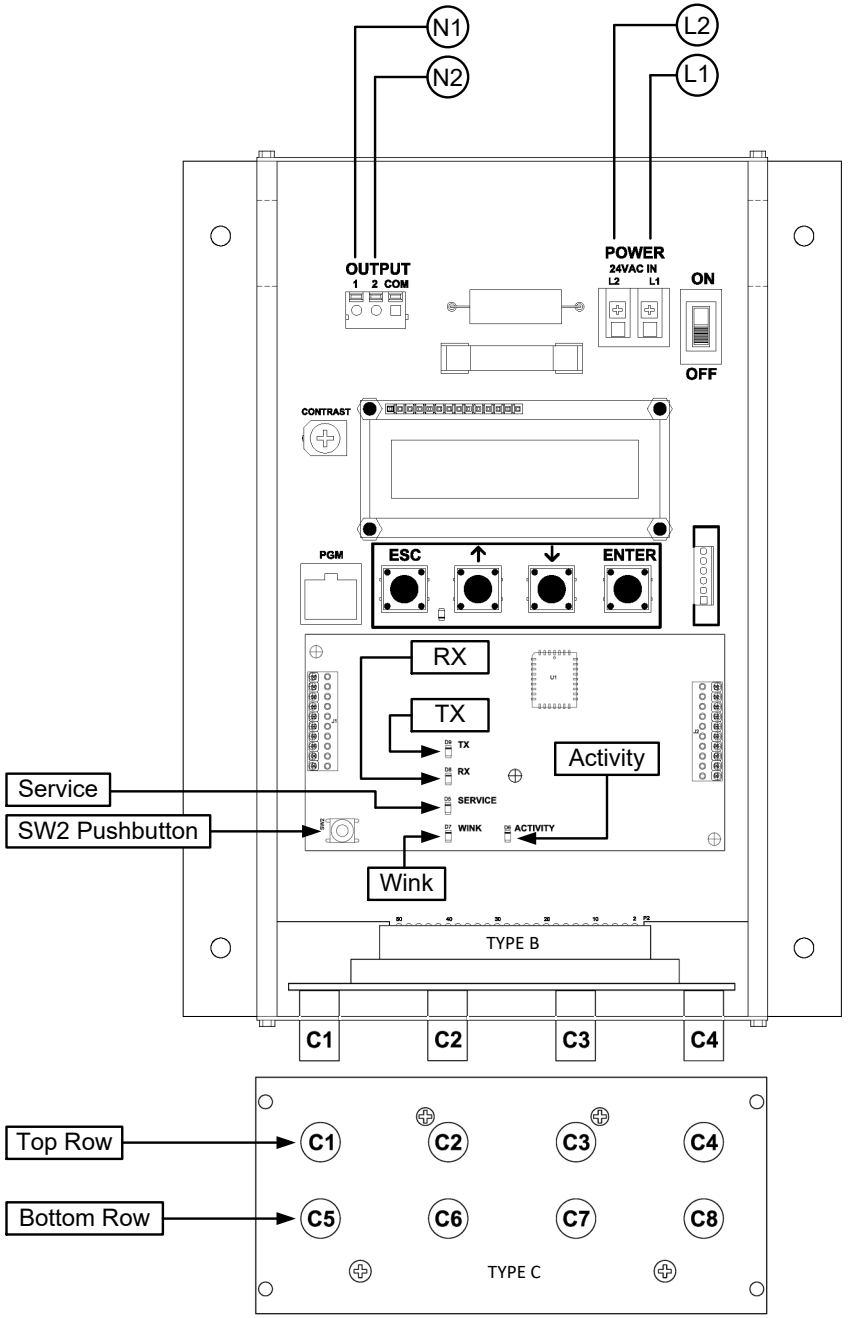

GTL108-F Parameters - Factory Defaults and Optional Settings/Ranges

Description	Parameter	Default	Optional Settings/Ranges	Units
System of Units	SYS	I-P (US customary)	SI (metric)	
Airflow Calculation Method	AIRFLOW	ACT (actual)	STD (standard mass flow)	
Altitude (for actual flow correction)	ALT	0	0 to 20000 [0 to 6000]	ft [m]
Low Limit Airflow Cutoff	LLIMIT	0 FPM	0 to 500 FPM [0.0 to 2.5 m/s]	
Area	AREA	*{Null}* requires entry	0.00 to 9999.99 [0.000 to 999.999]	sq ft [sq m]
Lon Network xif File Link	https://ebtron.com/wp-content/uploads/software/EBTRON_108.XIF			

Refer to the O&M Manual for more information and/or additional parameter defaults, settings and ranges.

STARTUP INSTRUCTIONS:

1. Verify that the sensor probes are properly installed and secured in the fan inlet(s).

⚠ *Improperly installed probes will compromise the installed accuracy of the device and degrade system performance.*

2. Verify that the transmitter is installed and wired in accordance with the *GTL108-F Wiring Guide* provided with the transmitter and power is provided to the transmitter.
3. Make sure the ductwork is clean and free of debris prior to fan startup.
4. Move the power switch to the "ON" position. Power-up faults, if detected, are displayed on the LCD. If any power up faults are detected, resolve all conflicts or contact EBTRON customer service at 1-800-232-8766 before proceeding..

⚠ *If extension cables have been added, the extension cable length must be entered into the transmitter. Refer to the Operations and Maintenance Manual for more information.*

5. The transmitter is fully functional as a factory calibrated airflow and temperature measurement device in I-P units (ft, FPM, CFM °F). Airflow (CFM) and temperature (°F) are displayed on the LCD.

ⓘ *If SI units are required, refer to the the Operations and Maintenance Manual.*

ⓘ *The factory default airflow output is set to actual airflow (FPM, CFM). If standard (mass) airflow (SFPM, SCFM) is required, refer to the Operations and Maintenance Manual.*

6. It is recommended that the area of the fan inlet is entered manually or calculated using the fan area wizard tool (FAN WIZ). The total area parameter, AREA, can also be entered manually directly through the SETTINGS menu.

ⓘ The area is always determined by using the diameter of the inlet at the leading (upstream) side of the sensor node housing.

ⓘ Refer to the Operations and Maintenance Manual if manual entry of the AREA parameter is desired.

⚠ Failure to use the correct area will result in volumetric airflow (CFM) measurement error and degrade system performance.

7. To use the FAN WIZ tool, press the ↑↓ arrow buttons simultaneously to enter the MAIN MENU. The SETTINGS menu is displayed. Press the ↓ button until the TOOLS menu category is visible. Press the ENT button to select the top of the TOOLS submenu category. Press the ↓ button until the FAN WIZ tool is visible. Press the ENT button to execute the tool. Select "YES" when the SAVE prompt is displayed. The display will be changed from FPM to CFM and the AREA parameter will be updated.
8. If the LON network connection is required continue to step 9, otherwise skip to step 11.
9. LON transmitters are provided with a full featured LonWorks compatible interface. No transmitter configuration is required.

ⓘ *A "Service" push-button, SW2, is provided for device commissioning. Once the device is recognized commissioning can be completed by uploading the parameters from the device.*

10. Download the external interface file (.xif) if required by the installation software:
    https://ebtron.com/wp-content/uploads/software/EBTRON_108.XIF

ⓘ *A "Wink" LED is provided for easy device identification.*

ⓘ *An "Activity" LED and separate transmit and receive "TX" and "RX" indicators provide visual indication of transmitter and communication status. The "Activity" LED flashes on for 1 second, off for 1 second when the card is commissioned and online. The "Activity" LED remains illuminated constantly if there is an error.*

11. Fan array models with the /An suffix can be configured to ignore a fan when an individual fan fault is detected. Refer to the Operations and Maintenance Manual for more information.
12. Startup is complete! If additional customization is desired, consult the *Operation and Maintenance Manual*.

VERIFICATION

Many installations require third-party airflow verification. If the airflow measuring device is within the measurement uncertainty of the verification technique, EBTRON strongly recommends that no field adjustment correction is made. EBTRON airflow measurement devices are factory calibrated to NIST traceable standards. Field adjustment is not recommended when installed in accordance to published guidelines.

If field adjustment is required, refer to the *Operation and Maintenance Manual*.

ⓘ *If minimum placement guidelines cannot be achieved, installed accuracy may be compromised. Transmitters can be field adjusted to match a third-party measurement. Adjusted field measurements typically result in comparative readings within ±3% of the third-party measurement. Be advised that the third-party measurement may have uncertainties greater than or equal to ±10% and should only be used to adjust the airflow measurement device if the probes do not meet minimum placement requirements or the discrepancy is greater than the uncertainty of the third-party source.*

Variability in field mounting and fan inlet entry conditions may affect the installed accuracy of the measurement device. When airflow measurement devices are installed in the supply and return airflow paths for airflow tracking, set the system to 100% recirculation mode with no intake or relief at the air handling unit. Confirm that the intake and relief air dampers are closed and leakage is negligible. Confirm that the recirculation (return) air damper is fully open. If a return fan is installed, modulate the supply and return fan together in a manner that avoids under– or over-pressurization of the relief and intake plenums. Adjust one location to match the other using the field adjust wizard (FAW) at one or two airflow rates. This technique has been show to significantly improve tracking performance on marginal installations. Select the best measurement location as the reference. Refer to the Operations and Maintenance Manual for more information.

FOR MORE INFORMATION ….

Operations and Maintenance Manual.

The *Operations and Maintenance Manual* is a comprehensive reference document that contains information on installation, startup, custom configuration, built-in tools, diagnostics, troubleshooting and maintenance.

NEED MORE HELP?

EBTRON Customer Service

For toll-free factory support call 1-800-2EBTRON (1-800-232-8766), Monday through Thursday 8:00 AM to 4:30 PM and Friday 8:00 AM to 2:00 PM eastern time.

Your Local EBTRON Representative

Visit EBTRON.com for the name and contact information of your local representative.

Advantage IV (A4) GTM108-F STARTUP GUIDE

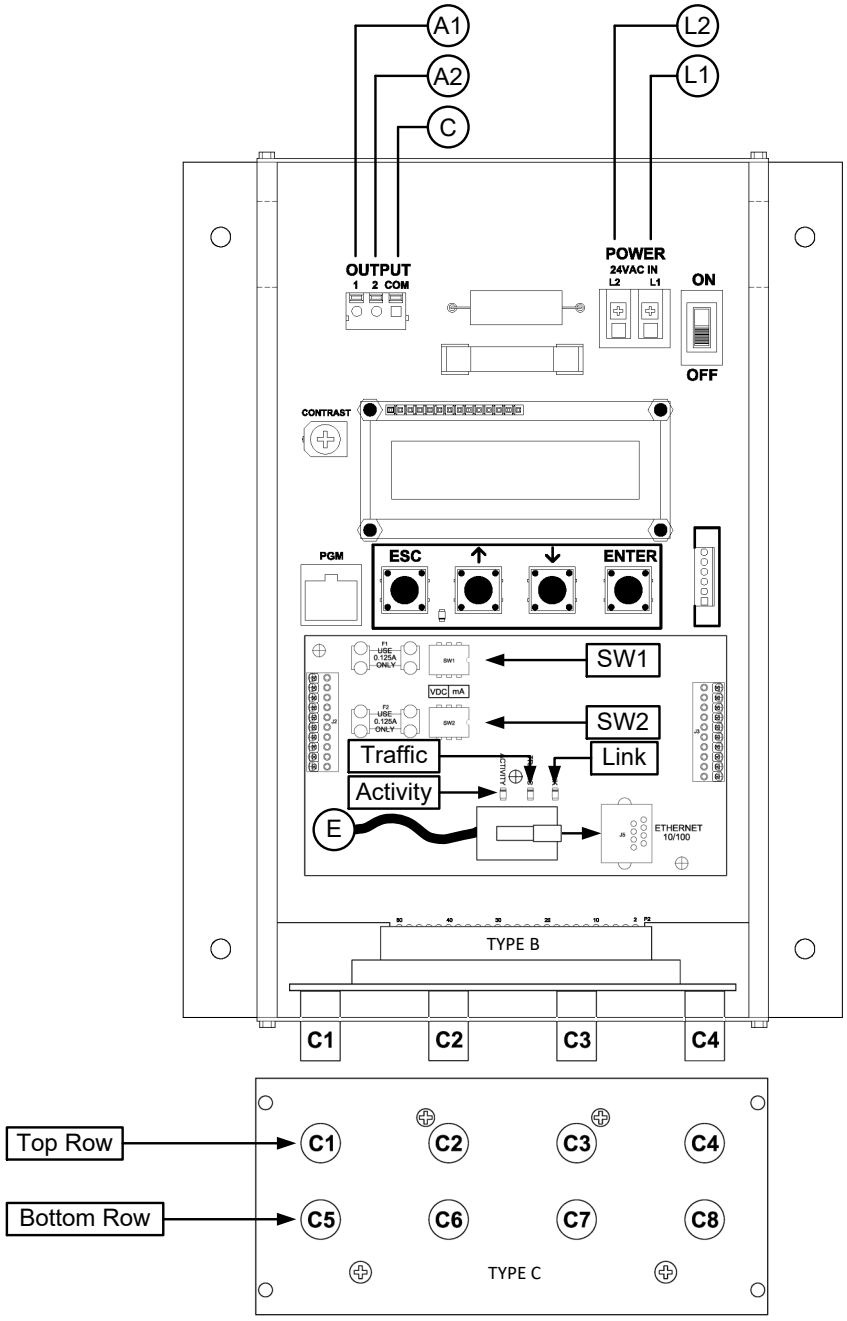

GTM108-F Parameters - Factory Defaults and Optional Settings/Ranges

Description	Parameter	Default	Optional Settings/Ranges	Units
System of Units	SYS	I-P (US customary)	SI (metric)	
Airflow Calculation Method	AIRFLOW	ACT (actual)	STD (standard mass flow)	
Altitude (for actual flow correction)	ALT	0	0 to 20000 [0 to 6000]	ft [m]
Low Limit Airflow Cutoff	LLIMIT	0 FPM	0 to 500 FPM [0.0 to 2.5 m/s]	
Area	AREA	*{Null}* requires entry	0.00 to 9999.99 [0.000 to 999.999]	sq ft [sq m]
AO1 Type	AOUT1	4-20mA	0-10V, 0-5 V	
AO2 Type	AOUT2	4-20mA	0-10V, 0-5 V	
AO1 Assignment	AO1 ASGN	AF (Airflow)	None	
AO1 Unit of Measure	AO1 UM	FPM [m/s]	CFM [L/s]	
AO1 Minimum Scale Reading	AO1 MS	0	None	FPM [m/s]
AO1 Full Scale Reading	AO1 FS	10000 [50.0]	100 to 15000 [0.5 to 75.0]	FPM [m/s]
AO2 Assignment (/SI and /DI)	AO2 ASGN	TEMP (Temperature)	ALRM (Alarm) or TRBL (System Trouble)	
AO2 Assignment (/An)	AO2 ASGN	TEMP (Temperature)	ALRM, FA (Fan Alarm) or TRBL	
AO2 Unit of Measure	AO2 UM	F [C]	None	°F [°C]
AO2 Minimum Scale Reading	AO2 MS	-20 [-30]	-50 to 160 [-50 to 70]	°F [°C]
AO2 Full Scale Reading	AO2 FS	160 [70]	-50 to 160 [-50 to 70]	°F [°C]
Ethernet Network	Simultaneous BACnet IP or BACnet Ethernet, Modbus TCP, and TCP/IP (requires configuration)			

Refer to the O&M Manual for more information and/or additional parameter defaults, settings and ranges.

STARTUP INSTRUCTIONS:

1. Verify that the sensor probes are properly installed and secured in the fan inlet(s).

⚠ *Improperly installed probes will compromise the installed accuracy of the device and degrade system performance.*

2. Verify that the transmitter is installed and wired in accordance with the *GTM108-F Wiring Guide* provided with the transmitter and power is provided to the transmitter.
3. Make sure the ductwork is clean and free of debris prior to fan startup.
4. Move the power switch to the "ON" position. Power-up faults, if detected, are displayed on the LCD. If any power up faults are detected, resolve all conflicts or contact EBTRON customer service at 1-800-232-8766 before proceeding..

⚠ *If extension cables have been added, the extension cable length must be entered into the transmitter. Refer to the Operations and Maintenance Manual for more information.*

5. The transmitter is fully functional as a factory calibrated airflow and temperature measurement device in I-P units (ft, FPM, CFM °F). Airflow (CFM) and temperature (°F) are displayed on the LCD.

ⓘ *If SI units are required, refer to the the Operations and Maintenance Manual.*

ⓘ *The factory default airflow output is set to actual airflow (FPM, CFM). If standard (mass) airflow (SFPM, SCFM) is required, refer to the Operations and Maintenance Manual.*

6. It is recommended that the area of the fan inlet is entered manually or calculated using the fan area wizard tool (FAN WIZ). The total area parameter, AREA, can also be entered manually directly through the SETTINGS menu.

ⓘ *The area is always determined by using the diameter of the inlet at the leading (upstream) side of the sensor node housing.*

ⓘ *Refer to the Operations and Maintenance Manual if manual entry of the AREA parameter is desired.*

⚠ *Failure to use the correct area will result in volumetric airflow (CFM) measurement error and degrade system performance.*

7. To use the FAN WIZ tool, press the ↑↓ arrow buttons simultaneously to enter the MAIN MENU. The SETTINGS menu is displayed. Press the ↓ button until the TOOLS menu category is visible. Press the ENT button to select the top of the TOOLS submenu category. Press the ↓ button until the FAN WIZ tool is visible. Press the ENT button to execute the tool. Select "YES" when the SAVE prompt is displayed. The display will be changed from FPM to CFM and the AREA parameter will be updated.
8. If analog output signals are used continue to step 9, otherwise skip to step 13.
9. Verify that the transmitter is configured to match the analog input requirements of the host controller. The output signal type (mA or VDC) of AO1 and AO2 are determined by switches SW1 (AO1) and SW2 (AO2) on the output card. The transmitter is factory set to 4-20mA. Verify the switches for the proper output signal type.

⚠ *The 4-20mA is "4-wire type" and not loop powered. Do not apply any excitation voltage to the output of the transmitter.*

10. Press the ESC and ↑ buttons simultaneously to display the transmitter setting for the AOUT1 (AO1) parameter. Use the ↓ button to view the setting for the AOUT (AO2) parameter. If the output signal type (mA or VDC) is not correct, position switches SW1 and/or SW2 on the option card board for the appropriate signal type. If VDC is selected and a 0-5V output is required in lieu of 0-10V, use the ↑↓ buttons until AOUT1 is visible. Press the ENT button and use the ↑↓ buttons to select 0-5V. Press the ENT button to execute and display the change. Do the same for AOUT2, if required. Press the ESC button to return to normal operation.
11. The analog output signal for airflow (AO1) is linear. The minimum scale reading (0% output) of the airflow signal is fixed at 0 and the full scale reading (100% output) is factory set to 10,000 FPM.

Multiply the default full scale velocity (FPM)by the correct area of the measurement location to determine the full-scale or span (CFM) for the B.A.S. to avoid field configuration. EBTRON airflow measurement device accuracy is percent-of-reading. Changing the full scale reading does not affect measurement accuracy.

ⓘ *If custom airflow scaling or unit of measure are required, refer to the Operations and Maintenance Manual.*

12. The analog output signal for temperature (AO2) is linear. The minimum scale reading (0% output) is set to -20 ºF and full scale reading (100% output) is set to 160 ºF.

ⓘ *If custom temperature scaling is required, refer to the Operations and Maintenance Manual.*

ⓘ *AO2 can be configured for a high/low airflow alarm or system status alarm. Refer to the Operations and Maintenance Manual for more information.*

13. If the Ethernet network connection is required continue to step 14, otherwise skip to step 16.
14. Press the ↑↓ arrow buttons simultaneously to enter the MAIN MENU. The SETTINGS menu is displayed. Press the ENT button to select the top of the SETTINGS submenu category. Press the ↓ button until the ETHERNET submenu category is visible. Press the ENT button again to enter the ETHERNET submenu. Configure the network parameters and press the ESC button twice to return to normal operation.

ⓘ *GTM108 transmitters support simultaneous communication via BACnet IP or BACnet Ethernet, Modbus TCP, and TCP/IP.*

15. Refer to the *Operations and Maintenance Manual* for detailed information on the BACnet Objects and Modbus Registers supported by this device.
16. Fan array models with the /An suffix can be configured to ignore a fan when an individual fan fault is detected. Refer to the Operations and Maintenance Manual for more information.
17. Startup is complete! If additional customization is desired, consult the *Operation and Maintenance Manual*.

VERIFICATION

Many installations require third-party airflow verification. If the airflow measuring device is within the measurement uncertainty of the verification technique, EBTRON strongly recommends that no field adjustment correction is made. EBTRON airflow measurement devices are factory calibrated to NIST traceable standards. Field adjustment is not recommended when installed in accordance to published guidelines.

If field adjustment is required, refer to the *Operation and Maintenance Manual*.

ⓘ *If minimum placement guidelines cannot be achieved, installed accuracy may be compromised. Transmitters can be field adjusted to match a third-party measurement. Adjusted field measurements typically result in comparative readings within ±3% of the third-party measurement. Be advised that the third-party measurement may have uncertainties greater than or equal to ±10% and should only be used to adjust the airflow measurement device if the probes do not meet minimum placement requirements or the discrepancy is greater than the uncertainty of the third-party source.*

Variability in field mounting and fan inlet entry conditions may affect the installed accuracy of the measurement device. When airflow measurement devices are installed in the supply and return airflow paths for airflow tracking, set the system to 100% recirculation mode with no intake or relief at the air handling unit. Confirm that the intake and relief air dampers are closed and leakage is negligible. Confirm that the recirculation (return) air damper is fully open. If a return fan is installed, modulate the supply and return fan together in a manner that avoids under– or over-pressurization of the relief and intake plenums. Adjust one location to match the other using the field adjust wizard (FAW) at one or two airflow rates. This technique has been show to significantly improve tracking performance on marginal installations. Select the best measurement location as the reference. Refer to the Operations and Maintenance Manual for more information.

FOR MORE INFORMATION ….

Operations and Maintenance Manual.

The *Operations and Maintenance Manual* is a comprehensive reference document that contains information on installation, startup, custom configuration, built-in tools, diagnostics, troubleshooting and maintenance.

NEED MORE HELP?

EBTRON Customer Service

For toll-free factory support call 1-800-2EBTRON (1-800-232-8766), Monday through Thursday 8:00 AM to 4:30 PM and Friday 8:00 AM to 2:00 PM eastern time.

Your Local EBTRON Representative

Visit EBTRON.com for the name and contact information of your local representative.

Advantage IV (A4) GTM108e-F STARTUP GUIDE

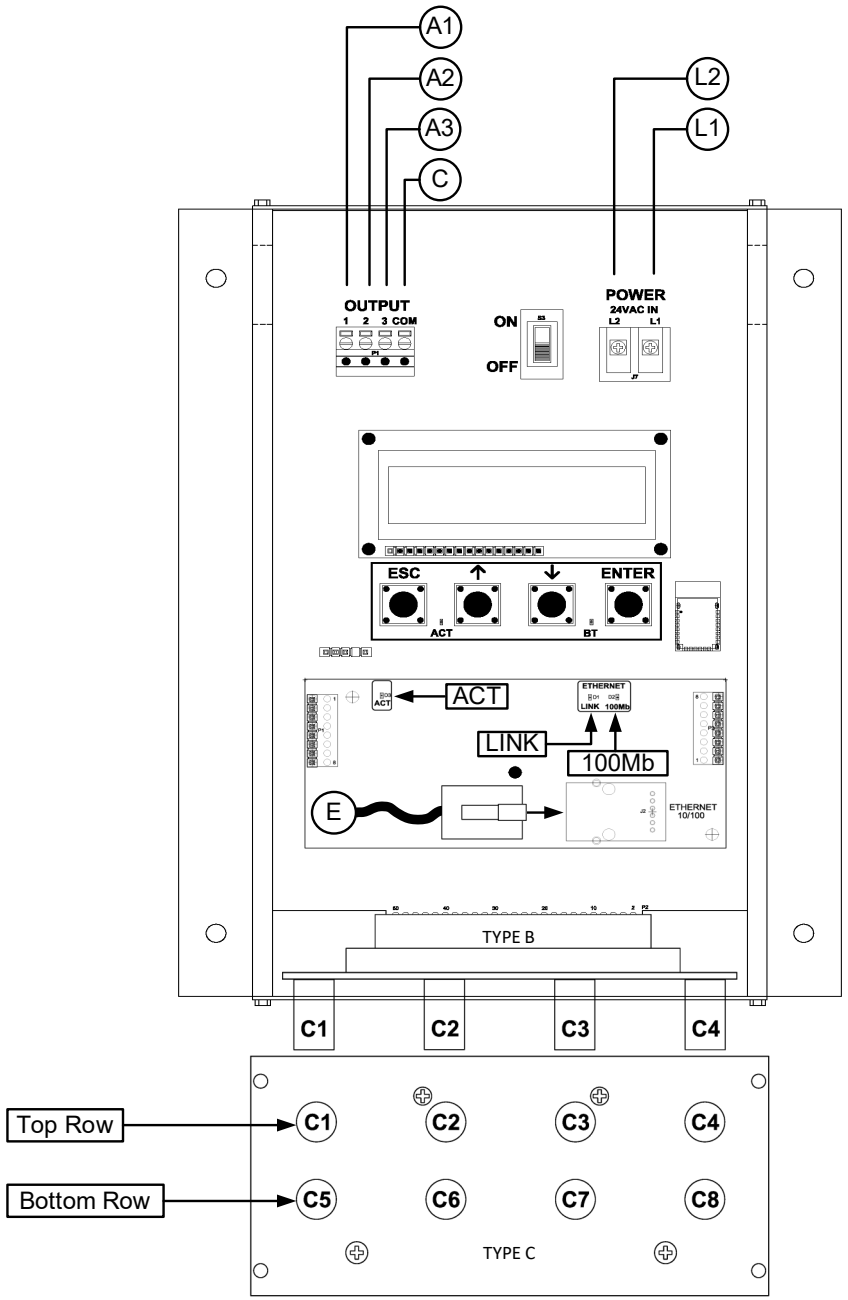

GTM108e-F Parameters - Factory Defaults and Optional Settings/Ranges

Description	Parameter	Default	Optional Settings/Ranges	Units
System of Units	SYS	I-P (US customary)	SI (metric)	
Airflow Calculation Method	AIRFLOW	ACT (actual)	STD (standard mass flow)	
Altitude (for actual flow correction)	ALT	0	0 to 20000 [0 to 6000]	ft [m]
Low Limit Airflow Cutoff	LLIMIT	0 FPM	0 to 500 FPM [0.0 to 2.5 m/s]	
Area	AREA	*{Null}* requires entry	0.00 to 9999.99 [0.000 to 999.999]	sq ft [sq m]
AO1, AO2 and AO3 Type	AOUT	4-20mA	0-10V, 0-5 V	
AO1 Assignment	AO1 ASGN	AF (Airflow)	None	
AO1 Unit of Measure	AO1 UM	FPM [m/s]	CFM [L/s]	
AO1 Minimum Scale Reading	AO1 MS	0	None	FPM [m/s]
AO1 Full Scale Reading	AO1 FS	10000 [50.0]	100 to 15000 [0.5 to 75.0]	FPM [m/s]
AO2 Assignment (/SI and /DI)	AO2 ASGN	TEMP (Temperature)	ALRM (Alarm) or TRBL (System Trouble)	
AO2 Assignment (/An)	AO2 ASGN	TEMP (Temperature)	ALRM, FA (Fan Alarm) or TRBL	
AO2 Unit of Measure	AO2 UM	F [C]	None	°F [°C]
AO2 Minimum Scale Reading	AO2 MS	-20 [-30]	-50 to 160 [-50 to 70]	°F [°C]
AO2 Full Scale Reading	AO2 FS	160 [70]	-50 to 160 [-50 to 70]	°F [°C]
AO3 Assignment	AO3 ASGN	N/A	N/A	
Ethernet Network	Simultaneous BACnet IP or BACnet Ethernet, Modbus TCP, and TCP/IP (requires configuration)			

Refer to the O&M Manual for more information and/or additional parameter defaults, settings and ranges.

STARTUP INSTRUCTIONS:

1. Verify that the sensor probes are properly installed and secured in the fan inlet(s).

⚠ *Improperly installed probes will compromise the installed accuracy of the device and degrade system performance.*

2. Verify that the transmitter is installed and wired in accordance with the *GTM108e-F Wiring Guide* provided with the transmitter and power is provided to the transmitter.
3. Make sure the ductwork is clean and free of debris prior to fan startup.
4. Move the power switch to the "ON" position. Power-up faults, if detected, are displayed on the LCD. If any power up faults are detected, resolve all conflicts or contact EBTRON customer service at 1-800-232-8766 before proceeding..

⚠ *If extension cables have been added, the extension cable length must be entered into the transmitter. Refer to the Operations and Maintenance Manual for more information.*

5. The transmitter is fully functional as a factory calibrated airflow and temperature measurement device in I-P units (ft, FPM, CFM °F). Airflow (CFM) and temperature (°F) are displayed on the LCD.

ⓘ *Airflow is displayed in FPM in lieu of CFM because the exact area where the fan inlet probes are located is not known until installation is complete.*

ⓘ *If SI units are required, refer to the Operations and Maintenance Manual.*

ⓘ *The factory default airflow output is set to actual airflow (FPM, CFM). If standard (mass) airflow (SFPM, SCFM) is required, refer to the Operations and Maintenance Manual.*

6. It is recommended that the area of the fan inlet is entered manually or calculated using the fan area wizard tool (FAN WIZ). The total area parameter, AREA, can also be entered manually directly through the SETTINGS menu.

ⓘ *The area is always determined by using the diameter of the inlet at the leading (upstream) side of the sensor node housing.*

ⓘ *Refer to the Operations and Maintenance Manual if manual entry of the AREA parameter is desired.*

⚠ *Failure to use the correct area will result in volumetric airflow (CFM) measurement error and degrade system performance.*

7. To use the FAN WIZ tool, press the ↑↓ arrow buttons simultaneously to enter the MAIN MENU. The SETTINGS menu is displayed. Press the ↓ button until the TOOLS menu category is visible. Press the ENT button to select the top of the TOOLS submenu category. Press the ↓ button until the FAN WIZ tool is visible. Press the ENT button to execute the tool. Select "YES" when the SAVE prompt is displayed. The display will be changed from FPM to CFM and the AREA parameter will be updated.
8. If analog output signals are used continue to step 9, otherwise skip to step 13.
9. The output signal type and range (4-20 mA, 0-5 VDC or 0-10VDC) of AO1 and AO2 is determined by the AOUT parameter. The transmitter is factory set to 4-20mA.

⚠ *The 4-20mA is "4-wire type" and not loop powered. Do not apply any excitation voltage to the output of the transmitter.*

10. Verify that the transmitter is configured to match the analog input requirements of the host controller. Press the ESC and ↑ buttons simultaneously to display the transmitter setting for the AOUT parameter. If the AOUT parameter is not correct, press the ENT button and use the ↑ and ↓ buttons to set AOUT. Press the ENT button to execute and display the change. Press the ESC button to return to normal operation.
11. The analog output signal for airflow (AO1) is linear. The minimum scale reading (0% output) of the airflow signal is fixed at 0 and the full scale reading (100% output) is factory set to 10,000 FPM.

Multiply the default full scale velocity (FPM)by the correct area of the measurement location to determine the full-scale or span (CFM) for the B.A.S. to avoid field configuration. EBTRON airflow measurement device accuracy is percent-of-reading. Changing the full scale reading does not affect measurement accuracy.

ⓘ *If custom airflow scaling or unit of measure are required, refer to the Operations and Maintenance Manual.*

12. The analog output signal for temperature (AO2) is linear. The minimum scale reading (0% output) is set to -20 ºF and full scale reading (100% output) is set to 160 ºF.

ⓘ *If custom temperature scaling is required, refer to the Operations and Maintenance Manual.*

ⓘ *AO2 can be configured for a high/low airflow alarm or system status alarm. AO2 can also be configured for the fan alarm if the /An fan array model is provided. Refer to the Operations and Maintenance Manual for more information.*

13. If the Ethernet network connection is required continue to step 14, otherwise skip to step 16.
14. Press the ↑↓ arrow buttons simultaneously to enter the MAIN MENU. The SETTINGS menu is displayed. Press the ENT button to select the top of the SETTINGS submenu category. Press the ↓ button until the ETHERNET submenu category is visible. Press the ENT button again to enter the ETHERNET submenu. Configure the network parameters and press the ESC button twice to return to normal operation.

ⓘ *GTM108e transmitters support simultaneous communication via BACnet IP or BACnet Ethernet, Modbus TCP, and TCP/IP.*

15. Refer to the *Operations and Maintenance Manual* for detailed information on the BACnet Objects and Modbus Registers supported by this device.
16. Fan array models with the /An suffix can be configured to ignore a fan when an individual fan fault is detected. Refer to the Operations and Maintenance Manual for more information.
17. Startup is complete! If additional customization is desired, consult the *Operation and Maintenance Manual*.

VERIFICATION

Many installations require third-party airflow verification. If the airflow measuring device is within the measurement uncertainty of the verification technique, EBTRON strongly recommends that no field adjustment correction is made. EBTRON airflow measurement devices are factory calibrated to NIST traceable standards. Field adjustment is not recommended when installed in accordance to published guidelines.

If field adjustment is required, refer to the *Operation and Maintenance Manual*.

ⓘ *Transmitters can be field adjusted to match a third-party measurement. Adjusted field measurements typically result in comparative readings within ±3% of the third-party measurement. Be advised that the third-party measurement may have uncertainties greater than or equal to ±10% and should only be used to adjust the airflow measurement if the discrepancy is greater than the uncertainty of the third-party source.*

Variability in field mounting and fan inlet entry conditions may affect the installed accuracy of the measurement device. When airflow measurement devices are installed in the supply and return airflow paths for airflow tracking, set the system to 100% recirculation mode with no intake or relief at the air handling unit. Confirm that the intake and relief air dampers are closed and leakage is negligible. Confirm that the recirculation (return) air damper is fully open. If a return fan is installed, modulate the supply and return fan together in a manner that avoids under– or over-pressurization of the relief and intake plenums. Adjust one location to match the other using the field adjust wizard (FAW) at one or two airflow rates. This technique has been show to significantly improve tracking performance on marginal installations. Select the best measurement location as the reference. Refer to the Operations and Maintenance Manual for more information.

NEED MORE HELP?

EBTRON Customer Service

For toll-free factory support call 1-800-2EBTRON (1-800-232-8766), Monday through Thursday 8:00 AM to 4:30 PM and Friday 8:00 AM to 2:00 PM eastern time.

Your Local EBTRON Representative

Visit EBTRON.com for the name and contact information of your local representative.

Advantage IV (A4) GTU108e-F STARTUP GUIDE

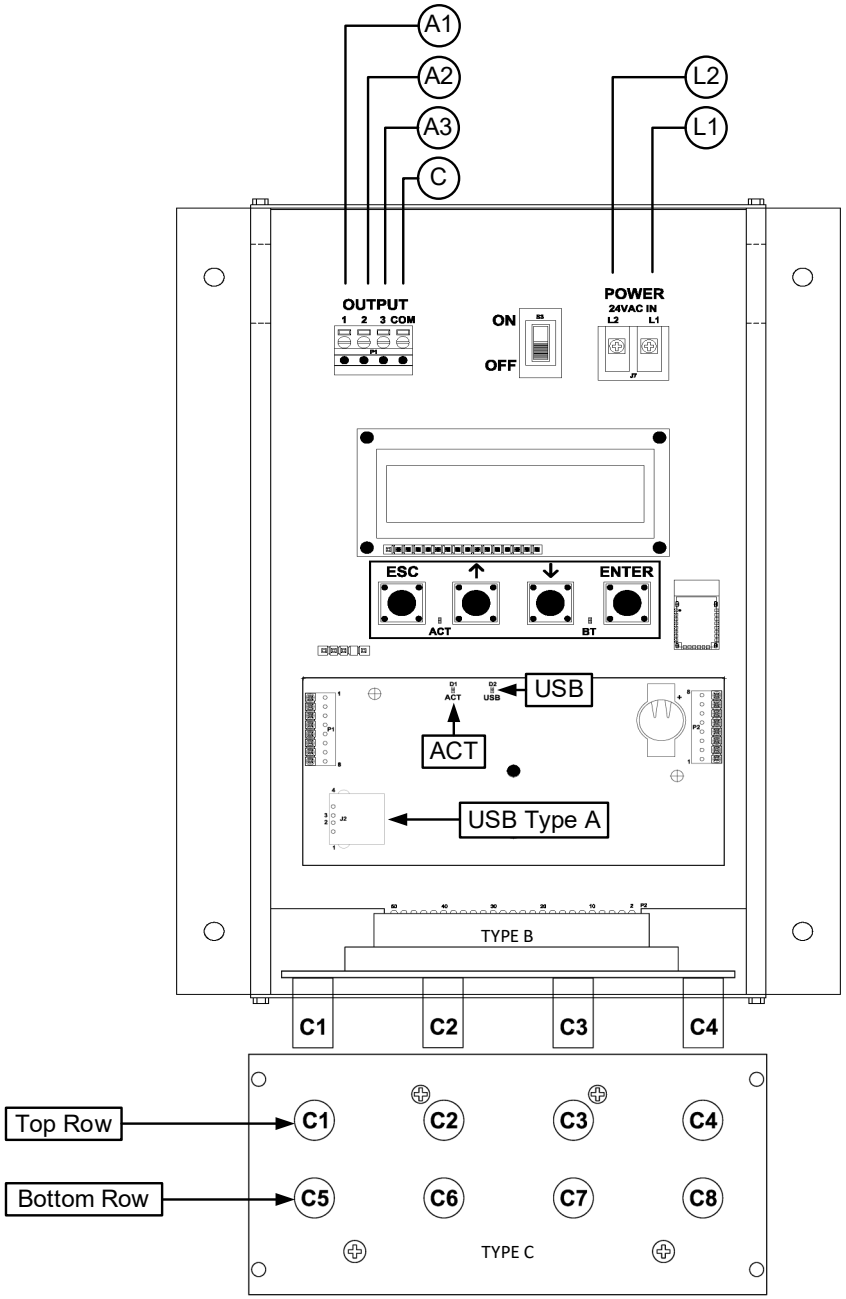

GTU108e-F Parameters - Factory Defaults and Optional Settings/Ranges

Description	Parameter	Default	Optional Settings/Ranges	Units
System of Units	SYS	I-P (US customary)	SI (metric)	
Airflow Calculation Method	AIRFLOW	ACT (actual)	STD (standard mass flow)	
Altitude (for actual flow correction)	ALT	0	0 to 20000 [0 to 6000]	ft [m]
Low Limit Airflow Cutoff	LLIMIT	0 FPM	0 to 500 FPM [0.0 to 2.5 m/s]	
Area	AREA	*{Null}* requires entry	0.00 to 9999.99 [0.000 to 999.999]	sq ft [sq m]
AO1, AO2 and AO3 Type	AOUT	4-20mA	0-10V, 0-5 V	
AO1 Assignment	AO1 ASGN	AF (Airflow)	None	
AO1 Unit of Measure	AO1 UM	FPM [m/s]	CFM [L/s]	
AO1 Minimum Scale Reading	AO1 MS	0	None	FPM [m/s]
AO1 Full Scale Reading	AO1 FS	10000 [50.0]	100 to 15000 [0.5 to 75.0]	FPM [m/s]
AO2 Assignment (/SI and /DI)	AO2 ASGN	TEMP (Temperature)	ALRM (Alarm) or TRBL (System Trouble)	
AO2 Assignment (/An)	AO2 ASGN	TEMP (Temperature)	ALRM, FA (Fan Alarm) or TRBL	
AO2 Unit of Measure	AO2 UM	F [C]	None	°F [°C]
AO2 Minimum Scale Reading	AO2 MS	-20 [-30]	-50 to 160 [-50 to 70]	°F [°C]
AO2 Full Scale Reading	AO2 FS	160 [70]	-50 to 160 [-50 to 70]	°F [°C]
AO3 Assignment	AO3 ASGN	N/A	N/A	
Datalogger	Requires a Type A USB Datalogger "thumb drive" (see below)			
USB Port (turn off before removal)	USB WRITE	ON	OFF	

Refer to the O&M Manual for more information and/or additional parameter defaults, settings and ranges.

STARTUP INSTRUCTIONS:

1. Verify that the sensor probes are properly installed and secured in the fan inlet(s).

⚠ *Improperly installed probes will compromise the installed accuracy of the device and degrade system performance.*

2. Verify that the transmitter is installed and wired in accordance with the *GTU108e-F Wiring Guide* provided with the transmitter and power is provided to the transmitter.
3. Make sure the ductwork is clean and free of debris prior to fan startup.
4. Move the power switch to the "ON" position. Power-up faults, if detected, are displayed on the LCD. If any power up faults are detected, resolve all conflicts or contact EBTRON customer service at 1-800-232-8766 before proceeding..

⚠ *If extension cables have been added, the extension cable length must be entered into the transmitter. Refer to the Operations and Maintenance Manual for more information.*

5. The transmitter is fully functional as a factory calibrated airflow and temperature measurement device in I-P units (ft, FPM, CFM °F). Airflow (CFM) and temperature (°F) are displayed on the LCD.

ⓘ *Airflow is displayed in FPM in lieu of CFM because the exact area where the fan inlet probes are located is not known until installation is complete.*

ⓘ *If SI units are required, refer to the Operations and Maintenance Manual.*

ⓘ *The factory default airflow output is set to actual airflow (FPM, CFM). If standard (mass) airflow (SFPM, SCFM) is required, refer to the Operations and Maintenance Manual.*

6. It is recommended that the area of the fan inlet is entered manually or calculated using the fan area wizard tool (FAN WIZ). The total area parameter, AREA, can also be entered manually directly through the SETTINGS menu.

ⓘ *The area is always determined by using the diameter of the inlet at the leading (upstream) side of the sensor node housing.*

ⓘ *Refer to the Operations and Maintenance Manual if manual entry of the AREA parameter is desired.*

⚠ *Failure to use the correct area will result in volumetric airflow (CFM) measurement error and degrade system performance. If the area parameter must be changed, refer to the Operations and Maintenance Manual.*

7. To use the FAN WIZ tool, press the ↑↓ arrow buttons simultaneously to enter the MAIN MENU. The SETTINGS menu is displayed. Press the ↓ button until the TOOLS menu category is visible. Press the ENT button to select the top of the TOOLS submenu category. Press the ↓ button until the FAN WIZ tool is visible. Press the ENT button to execute the tool. Select "YES" when the SAVE prompt is displayed. The display will be changed from FPM to CFM and the AREA parameter will be updated.
8. If analog output signals are used continue to step 9, otherwise skip to step 13.
9. The output signal type and range (4-20 mA, 0-5 VDC or 0-10VDC) of AO1 and AO2 is determined by the AOUT parameter. The transmitter is factory set to 4-20mA.

⚠ *The 4-20mA is "4-wire type" and not loop powered. Do not apply any excitation voltage to the output of the transmitter.*

10. Verify that the transmitter is configured to match the analog input requirements of the host controller. Press the ESC and ↑ buttons simultaneously to display the transmitter setting for the AOUT parameter. If the AOUT parameter is not correct, press the ENT button and use the ↑ and ↓ buttons to set AOUT. Press the ENT button to execute and display the change. Press the ESC button to return to normal operation.
11. The analog output signal for airflow (AO1) is linear. The minimum scale reading (0% output) of the airflow signal is fixed at 0 and the full scale reading (100% output) is factory set to 10,000 FPM.

Multiply the default full scale velocity (FPM)by the correct area of the measurement location to determine the full-scale or span (CFM) for the B.A.S. to avoid field configuration. EBTRON airflow measurement device accuracy is percent-of-reading. Changing the full scale reading does not affect measurement accuracy.

ⓘ *If custom airflow scaling or unit of measure are required, refer to the Operations and Maintenance Manual.*

12. The analog output signal for temperature (AO2) is linear. The minimum scale reading (0% output) is set to -20 ºF and full scale reading (100% output) is set to 160 ºF.

ⓘ *If custom temperature scaling is required, refer to the Operations and Maintenance Manual.*

ⓘ *AO2 can be configured for a high/low airflow alarm or system status alarm. AO2 can also be configured for the fan alarm if the /An fan array model is provided. Refer to the Operations and Maintenance Manual for more information.*

13. If USB memory device connection is required continue to step 14, otherwise skip to step 22.
14. Transmitters with a USB data logger log the average airflow, average temperature, individual sensor node airflow and the individual sensor node temperature at 5-minute intervals using Universal Time Coordinated (UTC) based on an onboard real-time clock, whenever power is applied to the transmitter. Data files are automatically appended on power-up.

ⓘ *For standard transmitters equipped with EB-Link Bluetooth® low energy interface, the time zone and interval can be modified by the user using EB-Link software.*

15. To insert a USB memory device ("thumb drive") for data logging continue to step 16, otherwise skip to step 19.
16. Install the USB memory device into the USB connector on the option card to start logging data.

It is a good practice to set the transmitter power switch to the "OFF" position before inserting the USB memory device.

17. The USB port must be enabled to log data.
18. Enable the USB WRITE parameter to start logging data. Press the ↑↓ arrow buttons simultaneously to enter the MAIN MENU. The SETTINGS menu is displayed. Press the ENT button to select the top of the SETTINGS submenu category. Press the ↓ button until the USB submenu category is visible. Press the ENT button. The USB WRITE parameter is visible. Press the ENT button and use the ↑↓ buttons to select ON. Press the ENT button to save the selection. Press the ESC button twice to return to normal operation.

ⓘ *Transmitters are shipped with the USB port parameter USB WRITE set to "ON".*

19. To remove the USB memory device and/or stop data logging continue to step 20, otherwise skip to step 22.
20. Disable the USB WRITE parameter stop logging data. Press the ↑↓ arrow buttons simultaneously to enter the MAIN MENU. The SETTINGS menu is displayed. Press the ENT button to select the top of the SETTINGS submenu category. Press the ↓ button until the USB submenu category is visible. Press the ENT button. The USB WRITE parameter is visible. Press the ENT button and use the ↑↓ buttons to select OFF. Press the ENT button to save the selection. Press the ESC button twice to return to normal operation.

⚠ Always set the USB WRITE parameter to "OFF" before removing the USB memory device to avoid data loss/and or damage.

21. Remove the USB memory device from the USB port, if desired.

It is a good practice to set the transmitter power switch to the "OFF" position before removing the USB memory device.

22. Fan array models with the /An suffix can be configured to ignore a fan when an individual fan fault is detected. Refer to the Operations and Maintenance Manual for more information.
23. Startup is complete! If additional customization is desired, consult the *Operation and Maintenance Manual*.

VERIFICATION

Many installations require third-party airflow verification. If the airflow measuring device is within the measurement uncertainty of the verification technique, EBTRON strongly recommends that no field adjustment correction is made. EBTRON airflow measurement devices are factory calibrated to NIST traceable standards. Field adjustment is not recommended when installed in accordance to published guidelines.

If field adjustment is required, refer to the *Operation and Maintenance Manual*.

ⓘ *Transmitters can be field adjusted to match a third-party measurement. Adjusted field measurements typically result in comparative readings within ±3% of the third-party measurement. Be advised that the third-party measurement may have uncertainties greater than or equal to ±10% and should only be used to adjust the airflow measurement if the discrepancy is greater than the uncertainty of the third-party source.*

Variability in field mounting and fan inlet entry conditions may affect the installed accuracy of the measurement device. When airflow measurement devices are installed in the supply and return airflow paths for airflow tracking, set the system to 100% recirculation mode with no intake or relief at the air handling unit. Confirm that the intake and relief air dampers are closed and leakage is negligible. Confirm that the recirculation (return) air damper is fully open. If a return fan is installed, modulate the supply and return fan together in a manner that avoids under– or over-pressurization of the relief and intake plenums. Adjust one location to match the other using the field adjust wizard (FAW) at one or two airflow rates. This technique has been show to significantly improve tracking performance on marginal installations. Select the best measurement location as the reference. Refer

to the Operations and Maintenance Manual for more information.

NEED MORE HELP?

EBTRON Customer Service

For toll-free factory support call 1-800-2EBTRON (1-800-232-8766), Monday through Thursday 8:00 AM to 4:30 PM and Friday 8:00 AM to 2:00 PM eastern time.

Your Local EBTRON Representative

Visit EBTRON.com for the name and contact information of your local representative.

Advantage IV (A4) GTW108-F STARTUP GUIDE

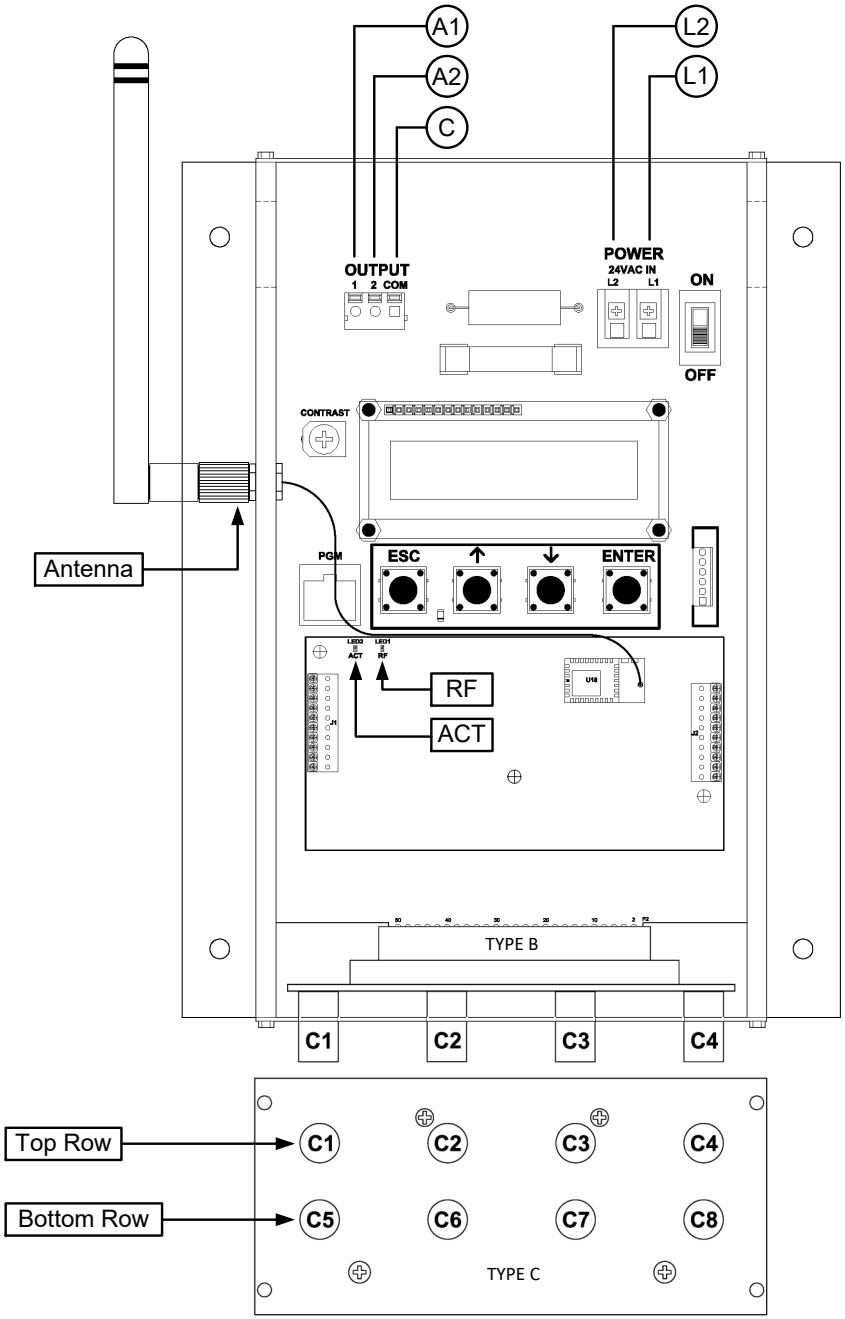

GTW108-F Parameters - Factory Defaults and Optional Settings/Ranges

Description	Parameter	Default	Optional Settings/Ranges	Units
System of Units	SYS	I-P (US customary)	SI (metric)	
Airflow Calculation Method	AIRFLOW	ACT (actual)	STD (standard mass flow)	
Altitude (for actual flow correction)	ALT	0	0 to 20000 [0 to 6000]	ft [m]
Low Limit Airflow Cutoff	LLIMIT	0 FPM	0 to 500 FPM [0.0 to 2.5 m/s]	
Area	AREA	*{Null}* requires entry	0.00 to 9999.99 [0.000 to 999.999]	sq ft [sq m]
AO1 Type	AOUT1	4-20mA	0-10V, 0-5 V	
AO2 Type	AOUT2	4-20mA	0-10V, 0-5 V	
AO1 Assignment	AO1 ASGN	AF (Airflow)	None	
AO1 Unit of Measure	AO1 UM	FPM [m/s]	CFM [L/s]	
AO1 Minimum Scale Reading	AO1 MS	0	None	FPM [m/s]
AO1 Full Scale Reading	AO1 FS	10000 [50.0]	100 to 15000 [0.5 to 75.0]	FPM [m/s]
AO2 Assignment (/SI and /DI)	AO2 ASGN	TEMP (Temperature)	ALRM (Alarm) or TRBL (System Trouble)	
AO2 Assignment (/An)	AO2 ASGN	TEMP (Temperature)	ALRM, FA (Fan Alarm) or TRBL	
AO2 Unit of Measure	AO2 UM	F [C]	None	°F [°C]
AO2 Minimum Scale Reading	AO2 MS	-20 [-30]	-50 to 160 [-50 to 70]	°F [°C]
AO2 Full Scale Reading	AO2 FS	160 [70]	-50 to 160 [-50 to 70]	°F [°C]
EBTRON RF-Link	Transmitter must be paired with an EBTRON transceiver prior to use (see below)			

Refer to the O&M Manual for more information and/or additional parameter defaults, settings and ranges.

STARTUP INSTRUCTIONS:

1. Verify that the sensor probes are properly installed and secured in the fan inlet(s).

⚠ *Improperly installed probes will compromise the installed accuracy of the device and degrade system performance.*

2. Verify that the transmitter is installed and wired in accordance with the *GTW108-F Wiring Guide* provided with the transmitter and power is provided to the transmitter.
3. Make sure the ductwork is clean and free of debris prior to fan startup.
4. Move the power switch to the "ON" position. Power-up faults, if detected, are displayed on the LCD. If any power up faults are detected, resolve all conflicts or contact EBTRON customer service at 1-800-232-8766 before proceeding..

⚠ *If extension cables have been added, the extension cable length must be entered into the transmitter. Refer to the Operations and Maintenance Manual for more information.*

5. The transmitter is fully functional as a factory calibrated airflow and temperature measurement device in I-P units (ft, FPM, CFM °F). Airflow (CFM) and temperature (°F) are displayed on the LCD.

ⓘ *If SI units are required, refer to the the Operations and Maintenance Manual.*

ⓘ *The factory default airflow output is set to actual airflow (FPM, CFM). If standard (mass) airflow (SFPM, SCFM) is required, refer to the Operations and Maintenance Manual.*

6. It is recommended that the area of the fan inlet is entered manually or calculated using the fan area wizard tool (FAN WIZ). The total area parameter, AREA, can also be entered manually directly through the SETTINGS menu.

ⓘ *The area is always determined by using the diameter of the inlet at the leading (upstream) side of the sensor node housing.*

ⓘ *Refer to the Operations and Maintenance Manual if manual entry of the AREA parameter is desired.*

⚠ *Failure to use the correct area will result in volumetric airflow (CFM) measurement error and degrade system performance.*

7. To use the FAN WIZ tool, press the ↑↓ arrow buttons simultaneously to enter the MAIN MENU. The SETTINGS menu is displayed. Press the ↓ button until the TOOLS menu category is visible. Press the ENT button to select the top of the TOOLS submenu category. Press the ↓ button until the FAN WIZ tool is visible. Press the ENT button to execute the tool. Select "YES" when the SAVE prompt is displayed. The display will be changed from FPM to CFM and the AREA parameter will be updated.
8. If analog output signals are used continue to step 9, otherwise skip to step 13.
9. Verify that the transmitter is configured to match the analog input requirements of the host controller. The output signal type (mA or VDC) of AO1 and AO2 are determined by switches SW1 (AO1) and SW2 (AO2) on the output card. The transmitter is factory set to 4-20mA. Verify the switches for the proper output signal type.

⚠ *The 4-20mA is "4-wire type" and not loop powered. Do not apply any excitation voltage to the output of the transmitter.*

10. Press the ESC and ↑ buttons simultaneously to display the transmitter setting for the AOUT1 (AO1) parameter. Use the ↓ button to view the setting for the AOUT (AO2) parameter. If the output signal type (mA or VDC) is not correct, position switches SW1 and/or SW2 on the option card board for the appropriate signal type. If VDC is selected and a 0-5V output is required in lieu of 0-10V, use the ↑↓ buttons until AOUT1 is visible. Press the ENT button and use the ↑↓ buttons to select 0-5V. Press the ENT button to execute and display the change. Do the same for AOUT2, if required. Press the ESC button to return to normal operation..
11. The analog output signal for airflow (AO1) is linear. The minimum scale reading (0% output) of the airflow signal is fixed at 0 and the full scale reading (100% output) is factory set to 10,000 FPM.

Multiply the default full scale velocity (FPM)by the correct area of the measurement location to determine the full-scale or span (CFM) for the B.A.S. to avoid field configuration. EBTRON airflow measurement device accuracy is percent-of-reading. Changing the full scale reading does not affect measurement accuracy.

ⓘ *If custom airflow scaling or unit of measure are required, refer to the Operations and Maintenance Manual.*

12. The analog output signal for temperature (AO2) is linear. The minimum scale reading (0% output) is set to -20 ºF and full scale reading (100% output) is set to 160 ºF.

ⓘ *If custom temperature scaling is required, refer to the Operations and Maintenance Manual.*

ⓘ *AO2 can be configured for a high/low airflow alarm or system status alarm. Refer to the Operations and Maintenance Manual for more information.*

13. The RF-Link connects the transmitter to an EBTRON Commissioner or other RF-Link compatible EBTRON master transceiver. The transmitter and transceiver must be paired prior to use. If the RF-Link connection is required continue to step 14, otherwise skip to step 17.
14. Turn on the appropriate EBTRON master transceiver.
15. Following the directions provided with the transceiver, set the transceiver to the "ADD DEVICE" mode.

⚠ *Do not have multiple master transceivers in the "ADD DEVICE" mode at the same time.*

16. Press the ↑↓ arrow buttons simultaneously to enter the MAIN MENU. The SETTINGS menu is displayed. Press the ENT button to select the top of the SETTINGS submenu category. Press the ↓ button until the RF-LINK submenu category is visible. Press the ENT button to enter the RF-Link submenu. RFLINK COM is visible. Press the ENT button and set the RFLINK COM parameter to ON using the ↑↓ buttons. Press the ENT button to initiate pairing. The transmitter displays "CONNECTING" during pairing. When the connection is made "CONNECTED" is displayed. If the connection fails "CON FAILED" is displayed. Press ENT to return to submenu prompt for RFLINK COM. If the connection was successful, *RFLINK COM=ON is displayed. Press the ESC button twice to return to normal operation.
17. Fan array models with the /An suffix can be configured to ignore a fan when an individual fan fault is detected. Refer to the Operations and Maintenance Manual for more information.
18. Startup is complete! If additional customization is desired, consult the *Operation and Maintenance Manual*.

VERIFICATION

Many installations require third-party airflow verification. If the airflow measuring device is within the measurement uncertainty of the verification technique, EBTRON strongly recommends that no field adjustment correction is made. EBTRON airflow measurement devices are factory calibrated to NIST traceable standards. Field adjustment is not recommended when installed in accordance to published guidelines.

If field adjustment is required, refer to the *Operation and Maintenance Manual*.

ⓘ *If minimum placement guidelines cannot be achieved, installed accuracy may be compromised. Transmitters can be field adjusted to match a third-party measurement. Adjusted field measurements typically result in comparative readings within ±3% of the third-party measurement. Be advised that the third-party measurement may have uncertainties greater than or equal to ±10% and should only be used to adjust the airflow measurement device if the probes do not meet minimum placement requirements or the discrepancy is greater than the uncertainty of the third-party source.*

Variability in field mounting and fan inlet entry conditions may affect the installed accuracy of the measurement device. When airflow measurement devices are installed in the supply and return airflow paths for airflow tracking, set the system to 100% recirculation mode with no intake or relief at the air handling unit. Confirm that the intake and relief air dampers are closed and leakage is negligible. Confirm that the recirculation (return) air damper is fully open. If a return fan is installed, modulate the supply and return fan together in a manner that avoids under– or over-pressurization of the relief and intake plenums. Adjust one location to match the other using the field adjust wizard (FAW) at one or two airflow rates. This technique has been show to significantly improve tracking performance on marginal installations. Select the best measurement location as the reference. Refer to the Operations and Maintenance Manual for more information.

FOR MORE INFORMATION ….

Operations and Maintenance Manual.

The *Operations and Maintenance Manual* is a comprehensive reference document that contains information on installation, startup, custom configuration, built-in tools, diagnostics, troubleshooting and maintenance.

EBTRON Customer Service

For toll-free factory support call 1-800-2EBTRON (1-800-232-8766), Monday through Thursday 8:00 AM to 4:30 PM and Friday 8:00 AM to 2:00 PM eastern time.

Your Local EBTRON Representative

Visit EBTRON.com for the name and contact information of your local representative.

Advantage IV (A4) HTA104-F STARTUP GUIDE

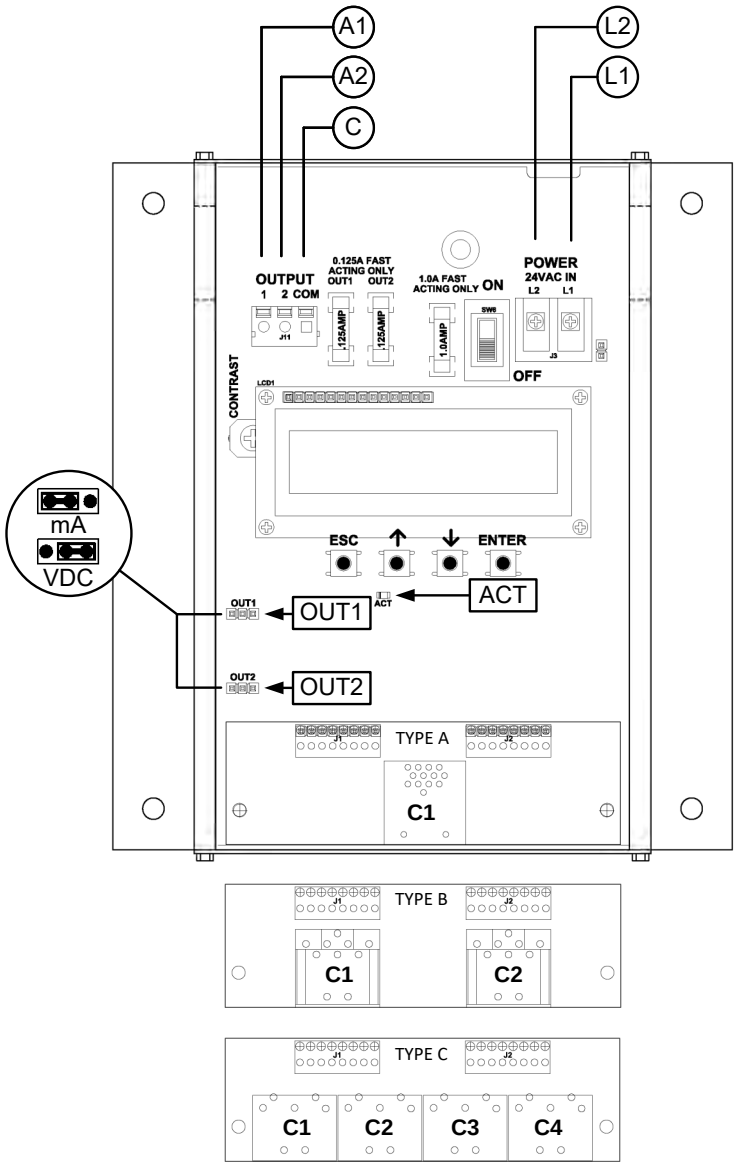

HTA104-F Parameters - Factory Defaults and Optional Settings/Ranges

Description	Parameter	Default	Optional Settings/Ranges	Units
System of Units	SYS	I-P (US customary)	SI (metric)	
Airflow Calculation Method	AIRFLOW	ACT (actual)	STD (standard mass flow)	
Altitude (for actual flow correction)	ALT	0	0 to 20000 [0 to 6000]	ft [m]
Low Limit Airflow Cutoff	LLIMIT	0 FPM	0 to 500 FPM [0.0 to 2.5 m/s]	
Area	AREA	*{Null}* requires entry	0.00 to 9999.99 [0.000 to 999.999]	sq ft [sq m]
AO1 Type	AOUT1	4-20mA	0-10V, 0-5 V	
AO2 Type	AOUT2	4-20mA	0-10V, 0-5 V	
AO1 Assignment	AO1 ASGN	AF (Airflow)	None	
AO1 Unit of Measure	AO1 UM	FPM [m/s]	CFM [L/s]	
AO1 Minimum Scale Reading	AO1 MS	0	None	FPM [m/s]
AO1 Full Scale Reading	AO1 FS	10000 [50.0]	100 to 15000 [0.5 to 75.0]	FPM [m/s]
AO2 Assignment	AO2 ASGN	TEMP (Temperature)	ALRM (Alarm) or TRBL (System Trouble)	
AO2 Unit of Measure	AO2 UM	F [C]	None	°F [°C]
AO2 Minimum Scale Reading	AO2 MS	-20 [-30]	-50 to 160 [-50 to 70]	°F [°C]
AO2 Full Scale Reading	AO2 FS	160 [70]	-50 to 160 [-50 to 70]	°F [°C]

Refer to the O&M Manual for more information and/or additional parameter defaults, settings and ranges.

STARTUP INSTRUCTIONS:

1. Verify that the sensor probes are properly installed and secured in the fan inlet(s).

⚠ *Improperly installed probes will compromise the installed accuracy of the device and degrade system performance.*

2. Verify that the transmitter is installed and wired in accordance with the *HTA104-F Wiring Guide* provided with the transmitter and power is provided to the transmitter.
3. Make sure the ductwork is clean and free of debris prior to fan startup.
4. Move the power switch to the "ON" position. Power-up faults, if detected, are displayed on the LCD. If any power up faults are detected, resolve all conflicts or contact EBTRON customer service at 1-800-232-8766 before proceeding..

⚠ *If extension cables have been added, the extension cable length must be entered into the transmitter. Refer to the Operations and Maintenance Manual for more information.*

5. The transmitter is fully functional as a factory calibrated airflow and temperature measurement device in I-P units (ft, FPM, CFM °F). Airflow (FPM) and temperature (°F) are displayed on the LCD.

ⓘ *Airflow is displayed in FPM in lieu of CFM because the exact area where the fan inlet probes are located is not known until installation is complete.*

ⓘ *If SI units are required, refer to the the Operations and Maintenance Manual.*

ⓘ *The factory default airflow output is set to actual airflow (FPM, CFM). If standard (mass) airflow (SFPM, SCFM) is required, refer to the Operations and Maintenance Manual.*

6. It is recommended that the area of the fan inlet is entered manually or calculated using the fan area wizard tool (FAN WIZ). The total area parameter, AREA, can also be entered manually directly through the SETTINGS menu.

ⓘ *The area is always determined by using the diameter of the inlet at the leading (upstream) side of the sensor node housing.*

ⓘ *Refer to the Operations and Maintenance Manual if manual entry of the AREA parameter is desired.*

⚠ *Failure to use the correct area will result in volumetric airflow (CFM) measurement error and degrade system performance.*

7. To use the FAN WIZ tool, press the ↑↓ arrow buttons simultaneously to enter the MAIN MENU. The SETTINGS menu is displayed. Press the ↓ button until the TOOLS menu category is visible. Press the ENT button to select the top of the TOOLS submenu category. Press the ↓ button until the FAN WIZ tool is visible. Press the ENT button to execute the tool. Select "YES" when the SAVE prompt is displayed. The display will be changed from FPM to CFM and the AREA parameter will be updated.
8. If analog output signals are used continue to step 9, otherwise skip to step 14.
9. The output signal type and range (4-20 mA, 0-5 VDC or 0-10 VDC) of AO1 and AO2 is determined by the AOUT parameter and the position of the output jumpers located on the left side of the PCB. Position the jumpers (AOUT1 for AO1 and AOUT2 for AO2) to "mA" if a 4-20 mA signal is required or "VDC" if a 0-5 or 0-10 VDC signal is required. The transmitter is factory set to 4-20mA (i.e. AOUT=4-20mA and both jumpers are set to "mA").

⚠ *The 4-20mA is "4-wire type" and not loop powered. Do not apply any excitation voltage to the output of the transmitter.*

10. Verify that the transmitter is configured to match the analog input requirements of the host controller. Press the ESC and ↑ buttons simultaneously to display the transmitter setting for the AOUT parameter. If the AOUT parameter is not correct, press the ENT button and use the ↑ and ↓ buttons to set AOUT. Press the ENT button to execute and display the change. Press the ESC button to return to normal operation.
11. Verify that jumpers AOUT1 and AOUT2 are set to "mA" if the AOUT parameter is set to "4-20mA" or "VDC" if the AOUT parameter is set to "0-5V" or "0-10V".
12. The analog output signal for airflow (AO1) is linear. The minimum scale reading (0% output) of the airflow signal is fixed at 0 and the full scale reading (100% output) is factory set to 10,000 FPM.

Multiply the default full scale velocity (FPM)by the correct total area (i.e. AREA parameter) of the measurement location to determine the full-scale or span (CFM) for the B.A.S. to avoid additional field configuration. EBTRON airflow measurement device accuracy is percent-of-reading. Changing the full scale reading does not affect measurement accuracy.

ⓘ *If custom airflow scaling or unit of measure are required, refer to the Operations and Maintenance Manual.*

13. The analog output signal for temperature (AO2) is linear. The minimum scale reading (0% output) is set to -20 ºF and full scale reading (100% output) is set to 160 ºF.

ⓘ *If custom temperature scaling is required, refer to the Operations and Maintenance Manual.*

ⓘ *AO2 can be configured for a high/low airflow alarm or system status alarm. Refer to the Operations and Maintenance Manual for more information.*

14. Startup is complete! If additional customization is desired, consult the *Operation and Maintenance Manual*.

VERIFICATION

Many installations require third-party airflow verification. If the airflow measuring device is within the measurement uncertainty of the verification technique, EBTRON strongly recommends that no field adjustment correction is made. EBTRON airflow measurement devices are factory calibrated to NIST traceable standards. Field adjustment is not recommended when installed in accordance to published guidelines.

If field adjustment is required, refer to the *Operation and Maintenance Manual*.

ⓘ *Transmitters can be field adjusted to match a third-party measurement. Adjusted field measurements typically result in comparative readings within ±3% of the third-party measurement. Be advised that the third-party measurement may have uncertainties greater than or equal to ±10% and should only be used to adjust the airflow measurement if the discrepancy is greater than the uncertainty of the third-party source.*

Variability in field mounting and fan inlet entry conditions may affect the installed accuracy of the measurement device. When airflow measurement devices are installed in the supply and return airflow paths for airflow tracking, set the system to 100% recirculation mode with no intake or relief at the air handling unit. Confirm that the intake and relief air dampers are closed and leakage is negligible. Confirm that the recirculation (return) air damper is fully open. If a return fan is installed, modulate the supply and return fan together in a manner that avoids under– or over-pressurization of the relief and intake plenums. Adjust one location to match the other using the field adjust wizard (FAW) at one or two airflow rates. This technique has been show to significantly improve tracking performance on marginal installations. Select the best measurement location as the reference. Refer to the Operations and Maintenance Manual for more information.

FOR MORE INFORMATION ….

Operations and Maintenance Manual.

The *Operations and Maintenance Manual* is a comprehensive reference document that contains information on installation, startup, custom configuration, built-in tools, diagnostics, troubleshooting and maintenance.

NEED MORE HELP?

EBTRON Customer Service

For toll-free factory support call 1-800-2EBTRON (1-800-232-8766), Monday through Thursday 8:00 AM to 4:30 PM and Friday 8:00 AM to 2:00 PM eastern time.

Your Local EBTRON Representative

Visit EBTRON.com for the name and contact information of your local representative.

Advantage IV (A4) HTN104-F STARTUP GUIDE

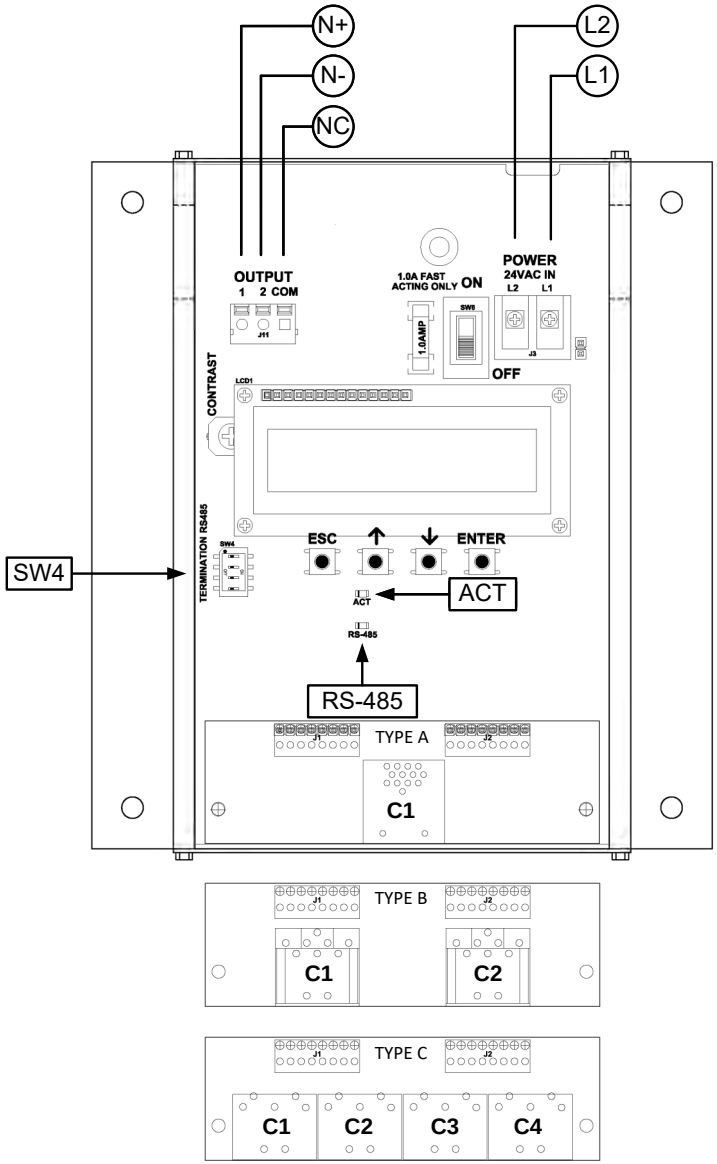

HTN104-F Parameters - Factory Defaults and Optional Settings/Ranges				
Description	Parameter	Default	Optional Settings/Ranges	Units
System of Units	SYS	I-P (US customary)	SI (metric)	
Airflow Calculation Method	AIRFLOW	ACT (actual)	STD (standard mass flow)	
Altitude (for actual flow correction)	ALT	0	0 to 20000 [0 to 6000]	ft [m]
Low Limit Airflow Cutoff	LLIMIT	0 FPM	0 to 500 FPM [0.0 to 2.5 m/s]	
Area	AREA	*{Null}* requires entry	0.00 to 9999.99 [0.000 to 999.999]	sq ft [sq m]
RS-485 Network	BACnet MS/TP or Modbus RTU (requires configuration)			

Refer to the O&M Manual for more information and/or additional parameter defaults, settings and ranges.

STARTUP INSTRUCTIONS:

1. Verify that the sensor probes are properly installed and secured in the fan inlet(s).

⚠ *Improperly installed probes will compromise the installed accuracy of the device and degrade system performance.*

2. Verify that the transmitter is installed and wired in accordance with the *HTN104-F Wiring Guide* provided with the transmitter and power is provided to the transmitter.
3. Make sure the ductwork is clean and free of debris prior to fan startup.
4. Move the power switch to the "ON" position. Power-up faults, if detected, are displayed on the LCD. If any power up faults are detected, resolve all conflicts or contact EBTRON customer service at 1-800-232-8766 before proceeding..

⚠ *If extension cables have been added, the extension cable length must be entered into the transmitter. Refer to the Operations and Maintenance Manual for more information.*

5. The transmitter is fully functional as a factory calibrated airflow and temperature measurement device in I-P units (ft, FPM, CFM °F). Airflow (FPM) and temperature (°F) are displayed on the LCD.

ⓘ *Airflow is displayed in FPM in lieu of CFM because the exact area where the fan inlet probes are located is not known until installation is complete.*

ⓘ *If SI units are required, refer to the the Operations and Maintenance Manual.*

ⓘ *The factory default airflow output is set to actual airflow (FPM, CFM). If standard (mass) airflow (SFPM, SCFM) is required, refer to the Operations and Maintenance Manual.*

6. It is recommended that the area of the fan inlet is entered manually or calculated using the fan area wizard tool (FAN WIZ). The total area parameter, AREA, can also be entered manually directly through the SETTINGS menu.

ⓘ *The area is always determined by using the diameter of the inlet at the leading (upstream) side of the sensor node housing.*

ⓘ *Refer to the Operations and Maintenance Manual if manual entry of the AREA parameter is desired.*

⚠ *Failure to use the correct area will result in volumetric airflow (CFM) measurement error and degrade system performance.*

7. To use the FAN WIZ tool, press the ↑↓ arrow buttons simultaneously to enter the MAIN MENU. The SETTINGS menu is displayed. Press the ↓ button until the TOOLS menu category is visible. Press the ENT button to select the top of the TOOLS submenu category. Press the ↓ button until the FAN WIZ tool is visible. Press the ENT button to execute the tool. Select "YES" when the SAVE prompt is displayed. The display will be changed from FPM to CFM and the AREA parameter will be updated.

Refer to the *Operations and Maintenance Manual* for more information.

8. If the RS-485 network connection is required continue to step 9, otherwise skip to step 11.
9. Press the ↑↓ arrow buttons simultaneously to enter the MAIN MENU. The SETTINGS menu is displayed. Press the ENT button to select the top of the SETTINGS submenu category. Press the ↓ button until the RS-485 submenu category is visible. Press the ENT button again to enter the RS-485 submenu. Set the NET OUT parameter for BACnet (MS/TP) or Modbus (RTU) and continue through the RS-485 submenu to configure the remaining network parameters. Enable network communications by setting the RS485 COM parameter to "ON". Refer to the *Operations and Maintenance Manual* for more information.
10. Refer to the *Operations and Maintenance Manual* for detailed information on the BACnet Objects and Modbus Registers supported by this device. .
11. Startup is complete! If additional customization is desired, consult the *Operation and Maintenance Manual*.

VERIFICATION

Many installations require third-party airflow verification. If the airflow measuring device is within the measurement uncertainty of the verification technique, EBTRON strongly recommends that no field adjustment correction is made. EBTRON airflow measurement devices are factory calibrated to NIST traceable standards. Field adjustment is not recommended when installed in accordance to published guidelines.

If field adjustment is required, refer to the *Operation and Maintenance Manual*.

ⓘ *Transmitters can be field adjusted to match a third-party measurement. Adjusted field measurements typically result in comparative readings within ±3% of the third-party measurement. Be advised that the third-party measurement may have uncertainties greater than or equal to ±10% and should only be used to adjust the airflow measurement if the discrepancy is greater than the uncertainty of the third-party source.*

Variability in field mounting and fan inlet entry conditions may affect the installed accuracy of the measurement device. When airflow measurement devices are installed in the supply and return airflow paths for airflow tracking, set the system to 100% recirculation mode with no intake or relief at the air handling unit. Confirm that the intake and relief air dampers are closed and leakage is negligible. Confirm that the recirculation (return) air damper is fully open. If a return fan is installed, modulate the supply and return fan together in a manner that avoids under– or over-pressurization of the relief and intake plenums. Adjust one location to match the other using the field adjust wizard (FAW) at one or two airflow rates. This technique has been show to significantly improve tracking performance on marginal installations. Select the best measurement location as the reference. Refer to the Operations and Maintenance Manual for more information.

FOR MORE INFORMATION ….

Operations and Maintenance Manual.

The *Operations and Maintenance Manual* is a comprehensive reference document that contains information on installation, startup, custom configuration, built-in tools, diagnostics, troubleshooting and maintenance.

NEED MORE HELP?

EBTRON Customer Service

For toll-free factory support call 1-800-2EBTRON (1-800-232-8766), Monday through Thursday 8:00 AM to 4:30 PM and Friday 8:00 AM to 2:00 PM eastern time.

Your Local EBTRON Representative

Visit EBTRON.com for the name and contact information of your local representative.

Advantage IV (A4) HTA104-B STARTUP GUIDE

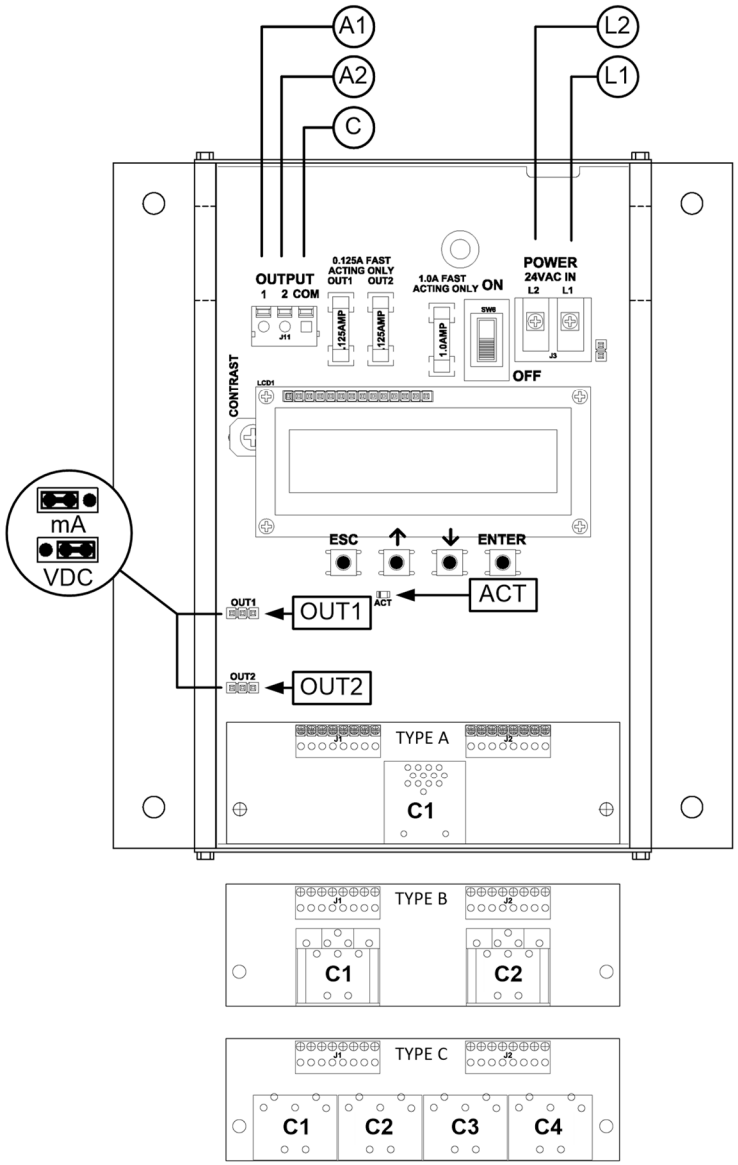

HTA104-B Parameters - Factory Defaults and Optional Settings/Ranges

Description	Parameter	Default	Optional Settings/Ranges	Units
System of Units	SYS	I-P (US customary)	SI (metric)	
Airflow Calculation Method	AIRFLOW	ACT (actual)	STD (standard mass flow)	
Altitude (for actual flow correction)	ALT	0	0 to 20000 [0 to 6000]	ft [m]
Low Limit Airflow Cutoff	LLIMIT	0 FPM	0 to 500 FPM [0.0 to 2.5 m/s]	
Area	AREA	*{Null} requires entry*	0.00 to 9999.99 [0.000 to 999.999]	sq ft [sq m]
Convert Airflow to Pressure	DPCONVERT	NO	YES	
Uni- or Bi-directional Output	DIRECTION	BI	UNI	
AO1 Type	AOUT1	4-20mA	0-10V, 0-5 V	
AO2 Type	AOUT2	4-20mA	0-10V, 0-5 V	
AO1 Assignment	AO1 ASGN	AF (Airflow)	None	
AO1 Unit of Measure	AO1 UM	FPM [m/s]	CFM [L/s]	
AO1 Minimum Scale Reading	AO1 MS	-3000 [-15.0]	None	FPM [m/s]
AO1 Full Scale Reading	AO1 FS	3000 [15.0]	100 to 15000 [0.5 to 75.0]	FPM [m/s]
AO2 Assignment	AO2 ASGN	TEMP (Temperature)	ALRM (Alarm) or TRBL (System Trouble)	
AO2 Unit of Measure	AO2 UM	F [C]	None	°F [°C]
AO2 Minimum Scale Reading	AO2 MS	-20 [-30]	-50 to 160 [-50 to 70]	°F [°C]
AO2 Full Scale Reading	AO2 FS	160 [70]	-50 to 160 [-50 to 70]	°F [°C]

Refer to the O&M Manual for more information and/or additional parameter defaults, settings and ranges.

STARTUP INSTRUCTIONS:

1. The bleed sensor measures airflow and direction through a 1/2 inch diameter pipe having 1/2 inch NPT female threads on both ends.
2. Verify that the bleed sensor is mounted with the airflow arrow pointing in the direction of airflow for unidirectional applications and in the positive direction of airflow for bidirectional applications.
3. Verify that the transmitter is installed and wired in accordance with the *HTA104-B Wiring Guide* provided with the transmitter and power is provided to the transmitter.
4. Move the power switch to the "ON" position. Power-up faults, if detected, are displayed on the LCD. If any power up faults are detected, resolve all conflicts or contact EBTRON customer service at 1-800-232-8766 before proceeding..

⚠ *If extension cables have been added, the extension cable length must be entered into the transmitter. Refer to the Operations and Maintenance Manual for more information.*

5. The transmitter is fully functional as a factory calibrated airflow and temperature measurement device in I-P units (ft, FPM, CFM °F). Bidirectional airflow (FPM) and temperature (°F) are displayed on the LCD.

ⓘ *If SI units are required, refer to the Operations and Maintenance Manual.*

ⓘ *The factory default airflow output is set to actual airflow (FPM, CFM). If standard (mass) airflow (SFPM, SCFM) is required, refer to the Operations and Maintenance Manual.*

6. The bleed sensor can be configured for bi– or uni-directional measurement. If uni-directional airflow is desired continue to step 7, otherwise skip to step 8.

7. To change from bidirectional to unidirectional measurement, press the ↑↓ arrow buttons simultaneously to enter the MAIN MENU. The SETTINGS menu is displayed. Press the ENT button to select the top of the SETTINGS submenu category. Press the ↓ button until the GENERAL submenu category is visible. Press the ENT button to enter the GENERAL submenu. Press the ↓ button until the DIRECTION parameter is visible. Press the ENT button and set the DIRECTION parameter to UNI using the ↑↓ buttons. Press the ENT button to save the selection. Press the ESC button twice to return to normal operation.
8. If the bleed sensor is used to estimate the total airflow though an opening, continue to step 9, otherwise skip to step 14.
9. Configure the bleed sensor for unidirectional measurement as directed in step 7.
10. Manually enter the free area of the opening where the bleed sensor is mounted in the transmitter. Press the ↑↓ arrow buttons simultaneously to enter the MAIN MENU. The SETTINGS menu is displayed. Press the ENT button to select the top of the SETTINGS submenu category. Press the ↓ button until the GENERAL submenu category is visible. Press the ENT button to enter the GENERAL submenu. Press the ↓ button until the AREA parameter is visible. Press the ENT button and set the AREA parameter using the ↑↓ buttons. Press the ENT button to save the area. Continue to step 11 before returning to normal operation.
11. Change the LCD to display CFM. Press the ESC button to return to the SETTINGS submenu category. Press the ↓ button until the LCD submenu category is visible. Press the ENT button to enter the LCD submenu. Press the ↓ button until the LCD UM parameter is visible. Press the ENT button and set the LCD UM parameter to CFM using the ↑↓ buttons. Press the ENT button to save the selection. Press the ESC button twice to return to normal operation.
12. Use the flow adjust wizard (FAW) to calibrate the bleed sensor to a reliable airflow reference measurement.
13. Press the ↑↓ arrow buttons simultaneously to enter the MAIN MENU. The SETTINGS menu is displayed. Press the ↓ button until the TOOLS menu category is visible. Press the ENT button to select the top of the TOOLS submenu category. Press the ↓ button until the FAW tool is visible. Press the ENT button to execute the tool. Choose a one or two point adjustment. Follow the prompts. Select "YES" when the SAVE prompt is displayed. The transmitter returns to normal operation with the adjustments calculated saved and enabled. Refer to the Operations and Maintenance Manual for more information.
14. If the bleed sensor is used to estimate the differential pressure between two adjacent spaces, continue to step 15, otherwise skip to step 16.
15. To change from airflow to pressure measurement, press the ↑↓ arrow buttons simultaneously to enter the MAIN MENU. The SETTINGS menu is displayed. Press the ENT button to select the top of the SETTINGS submenu category. Press the ↓ button until the GENERAL submenu category is visible. Press the ENT button to enter the GENERAL submenu. Press the ↓ button until the DPCONVERT parameter is visible. Press the ENT button and set the DPCONVERT parameter to YES using the ↑↓ buttons. Press the ENT button to save the selection. Press the ESC button twice to return to normal operation.

⚠ *The bleed airflow sensor is not a pressure sensor. Pressure is calculated using a nominal value for the assembly's flow coefficient without additional tubing and the output pressure is approximate. The addition of tubing changes the flow coefficient. To improve the accuracy of the pressure measurement manually calculate gain and offset coefficients using a high-performance pressure measuring device as a reference. Enter the coefficients manually in the transmitter and enable field adjustment. Refer to the Operations and Maintenance Manual for more information.*

16. If analog output signals are used continue to step 17, otherwise skip to step 22.
17. The output signal type and range (4-20 mA, 0-5 VDC or 0-10 VDC) of AO1 and AO2 is determined by the AOUT parameter and the position of the output jumpers located on the left side of the PCB. Position the jumpers (AOUT1 for AO1 and AOUT2 for AO2) to "mA" if a 4-20 mA signal is required or "VDC" if a 0-5 or 0-10 VDC signal is required. The transmitter is factory set to 4-20mA (i.e. AOUT=4-20mA and both jumpers are set to "mA").

⚠ *The 4-20mA is "4-wire type" and not loop powered. Do not apply any excitation voltage to the output of the transmitter.*

18. Verify that the transmitter is configured to match the analog input requirements of the host controller. Press the ESC and ↑ buttons simultaneously to display the transmitter setting for the AOUT parameter. If the output signal type and range is not correct, use the ↑ and ↓ buttons to display the proper output signal type and range and press the ENT button to execute the change.
19. Verify that jumpers AOUT1 and AOUT2 are set to "mA" if the AOUT parameter is set to "4-20mA" or "VDC" if the AOUT parameter is set to "0-5V" or "0-10V".
20. The analog output signal for airflow (AO1) is linear. If the bleed sensor is configured for unidirectional measurement, the minimum scale reading (0% output) of the airflow signal is fixed at 0 and the full scale reading (100% output) is factory set to 3,000 FPM if DPCONVERT=NO or 1.5 iWG if DPCONVERT=YES. If the bleed sensor is configured for bidirectional measurement, the minimum scale reading (0% output) of the airflow signal is fixed at the negative full scale reading.

Multiply the default full scale velocity (FPM)by the correct area of the measurement location to determine the full-scale or span (CFM) for the B.A.S. to avoid field configuration. EBTRON airflow measurement device accuracy is percent-of-reading. Changing the full scale reading does not affect measurement accuracy.

ⓘ *If custom airflow scaling or unit of measure are required, refer to the Operations and Maintenance Manual.*

21. The analog output signal for temperature (AO2) is linear. The minimum scale reading (0% output) is set to –20 ºF and full scale reading (100% output) is set to 160 ºF.

ⓘ *If custom temperature scaling is required, refer to the Operations and Maintenance Manual.*

ⓘ *AO2 can be configured for a high/low airflow alarm or system status alarm. Refer to the Operations and Maintenance Manual for more information.*

22. Startup is complete! If additional customization is desired, consult the *Operation and Maintenance Manual*.

FOR MORE INFORMATION ….

Operations and Maintenance Manual.

The *Operations and Maintenance Manual* is a comprehensive reference document that contains information on installation, startup, custom configuration, built-in tools, diagnostics, troubleshooting and maintenance.

NEED MORE HELP?

EBTRON Customer Service

For toll-free factory support call 1-800-2EBTRON (1-800-232-8766), Monday through Thursday 8:00 AM to 4:30 PM and Friday 8:00 AM to 2:00 PM eastern time.

Your Local EBTRON Representative

Visit EBTRON.com for the name and contact information of your local representative.

Advantage IV (A4) HTN104-B STARTUP GUIDE

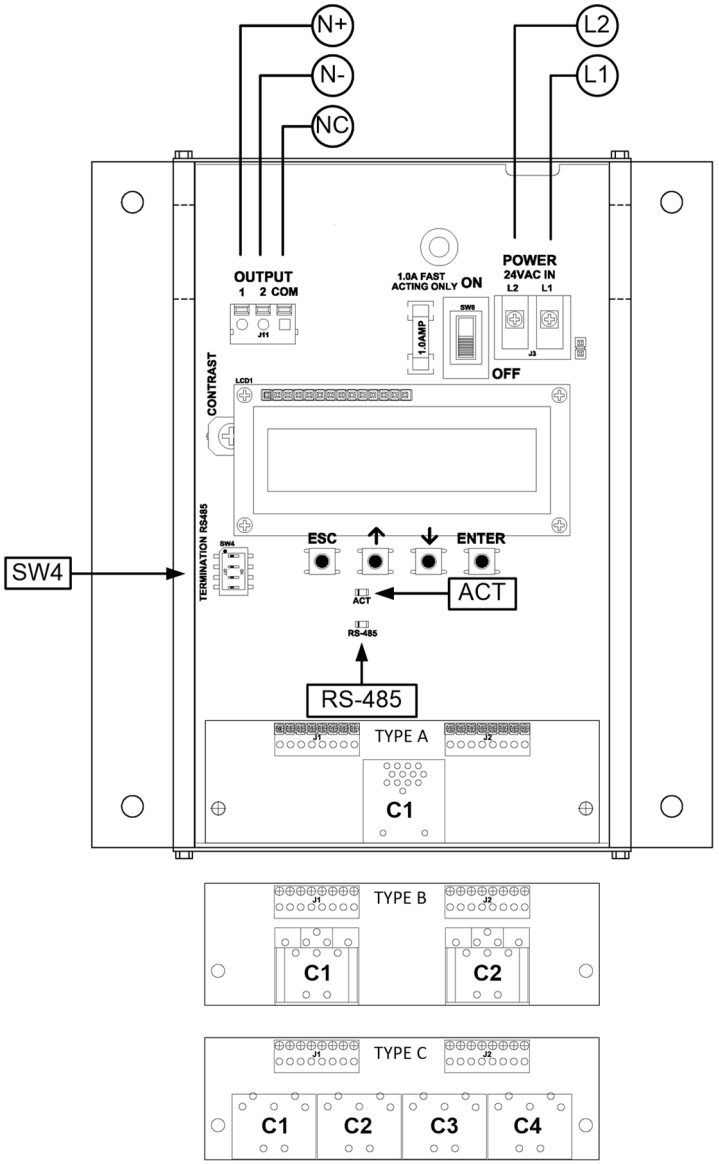

HTN104-B Parameters - Factory Defaults and Optional Settings/Ranges

Description	Parameter	Default	Optional Settings/Ranges	Units
System of Units	SYS	I-P (US customary)	SI (metric)	
Airflow Calculation Method	AIRFLOW	ACT (actual)	STD (standard mass flow)	
Altitude (for actual flow correction)	ALT	0	0 to 20000 [0 to 6000]	ft [m]
Low Limit Airflow Cutoff	LLIMIT	0 FPM	0 to 500 FPM [0.0 to 2.5 m/s]	
Area	AREA	*{Null} requires entry*	0.00 to 9999.99 [0.000 to 999.999]	sq ft [sq m]
Convert Airflow to Pressure	DPCONVERT	NO	YES	
Uni- or Bi-directional Output	DIRECTION	BI	UNI	
RS-485 Network	BACnet MS/TP or Modbus RTU (requires configuration)			

Refer to the O&M Manual for more information and/or additional parameter defaults, settings and ranges.

STARTUP INSTRUCTIONS:

1. The bleed sensor measures airflow and direction through a 1/2 inch diameter pipe having 1/2 inch NPT female threads on both ends.
2. Verify that the bleed sensor is mounted with the airflow arrow pointing in the direction of airflow for unidirectional applications and in the positive direction of airflow for bidirectional applications
3. Verify that the transmitter is installed and wired in accordance with the *HTN104-B Wiring Guide* provided with the transmitter and power is provided to the transmitter.
4. Move the power switch to the "ON" position. Power-up faults, if detected, are displayed on the LCD. If any power up faults are detected, resolve all conflicts or contact EBTRON customer service at 1-800-232-8766 before proceeding..

⚠ *If extension cables have been added, the extension cable length must be entered into the transmitter. Refer to the Operations and Maintenance Manual for more information.*

5. The transmitter is fully functional as a factory calibrated airflow and temperature measurement device in I-P units (ft, FPM, CFM °F). Bidirectional airflow (FPM) and temperature (°F) are displayed on the LCD.

ⓘ *If SI units are required, refer to the Operations and Maintenance Manual.*

ⓘ *The factory default airflow output is set to actual airflow (FPM, CFM). If standard (mass) airflow (SFPM, SCFM) is required, refer to the Operations and Maintenance Manual.*

6. The bleed sensor can be configured for bi– or uni-directional measurement. If uni-directional airflow is desired continue to step 7, otherwise skip to step 8.
7. To change from bidirectional to unidirectional measurement, press the ↑↓ arrow buttons simultaneously to enter the MAIN MENU. The SETTINGS menu is displayed. Press the ENT button to select the top of the SETTINGS submenu category. Press the ↓ button until the GENERAL submenu category is visible. Press the ENT button to enter the GENERAL submenu. Press the ↓ button until the DIRECTION parameter is visible. Press the ENT button and set the DIRECTION parameter to UNI using the ↑↓ buttons. Press the ENT button to save the selection. Press the ESC button twice to return to normal operation.
8. If the bleed sensor is used to estimate the total airflow though an opening, continue to step 9, otherwise skip to step 14.
9. Configure the bleed sensor for unidirectional measurement as directed in step 7.

10. Manually enter the free area of the opening where the bleed sensor is mounted in the transmitter. Press the ↑↓ arrow buttons simultaneously to enter the MAIN MENU. The SETTINGS menu is displayed. Press the ENT button to select the top of the SETTINGS submenu category. Press the ↓ button until the GENERAL submenu category is visible. Press the ENT button to enter the GENERAL submenu. Press the ↓ button until the AREA parameter is visible. Press the ENT button and set the AREA parameter using the ↑↓ buttons. Press the ENT button to save the area. Continue to step 11 before returning to normal operation.
11. Change the LCD to display CFM. Press the ESC button to return to the SETTINGS submenu category. Press the ↓ button until the LCD submenu category is visible. Press the ENT button to enter the LCD submenu. Press the ↓ button until the LCD UM parameter is visible. Press the ENT button and set the LCD UM parameter to CFM using the ↑↓ buttons. Press the ENT button to save the selection. Press the ESC button twice to return to normal operation.
12. Use the flow adjust wizard (FAW) to calibrate the bleed sensor to a reliable airflow reference measurement.
13. Press the ↑↓ arrow buttons simultaneously to enter the MAIN MENU. The SETTINGS menu is displayed. Press the ↓ button until the TOOLS menu category is visible. Press the ENT button to select the top of the TOOLS submenu category. Press the ↓ button until the FAW tool is visible. Press the ENT button to execute the tool. Choose a one or two point adjustment. Follow the prompts. Select "YES" when the SAVE prompt is displayed. The transmitter returns to normal operation with the adjustments calculated saved and enabled. Refer to the Operations and Maintenance Manual for more information.
14. If the bleed sensor is used to estimate the differential pressure between two adjacent spaces, continue to step 15, otherwise skip to step 16.
15. To change from airflow to pressure measurement, press the ↑↓ arrow buttons simultaneously to enter the MAIN MENU. The SETTINGS menu is displayed. Press the ENT button to select the top of the SETTINGS submenu category. Press the ↓ button until the GENERAL submenu category is visible. Press the ENT button to enter the GENERAL submenu. Press the ↓ button until the DPCONVERT parameter is visible. Press the ENT button and set the DPCONVERT parameter to YES using the ↑↓ buttons. Press the ENT button to save the selection. Press the ESC button twice to return to normal operation.

⚠ *The bleed airflow sensor is not a pressure sensor. Pressure is calculated using a nominal value for the assembly's flow coefficient without additional tubing and the output pressure is approximate. The addition of tubing changes the flow coefficient. To improve the accuracy of the pressure measurement manually calculate gain and offset coefficients using a high-performance pressure measuring device as a reference. Enter the coefficients manually in the transmitter and enable field adjustment. Refer to the Operations and Maintenance Manual for more information.*

16. If the RS-485 network connection is required continue to step 17, otherwise skip to step 19.
17. Press the ↑↓ arrow buttons simultaneously to enter the MAIN MENU. The SETTINGS menu is displayed. Press the ENT button to select the top of the SETTINGS submenu category. Press the ↓ button until the RS-485 submenu category is visible. Press the ENT button again to enter the RS-485 submenu. Set the NET OUT parameter for BACnet (MS/TP) or Modbus (RTU) and continue through the RS-485 submenu to configure the remaining network parameters. Enable network communications by setting the RS485 COM parameter to "ON". Refer to the *Operations and Maintenance Manual* for more information.
18. Refer to the *Operations and Maintenance Manual* for detailed information on the BACnet Objects and Modbus Registers supported by this device.
19. Startup is complete! If additional customization is desired, consult the *Operation and Maintenance Manual*.

FOR MORE INFORMATION ….

Operations and Maintenance Manual.

The *Operations and Maintenance Manual* is a comprehensive reference document that contains information on installation, startup, custom configuration, built-in tools, diagnostics, troubleshooting and maintenance.

NEED MORE HELP?

EBTRON Customer Service

For toll-free factory support call 1-800-2EBTRON (1-800-232-8766), Monday through Thursday 8:00 AM to 4:30 PM and Friday 8:00 AM to 2:00 PM eastern time.

Your Local EBTRON Representative

Visit EBTRON.com for the name and contact information of your local representative.

EB-FlowII EF-A2000-B STARTUP GUIDE

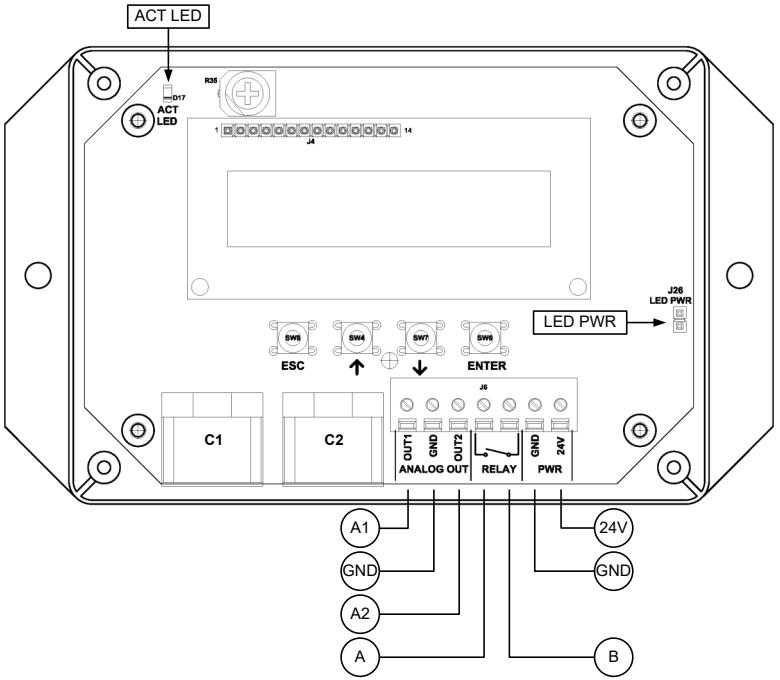

EF-A2000-B Parameters - Factory Defaults and Optional Settings/Ranges

Description	Parameter	Default	Optional Settings/Ranges	Units
System of Units	SYS	I-P (US customary)	SI (metric)	
Airflow Calculation Method	AIRFLOW	ACT (actual)	STD (standard mass flow)	
Altitude (for actual flow correction)	ALT	0	0 to 20000 [0 to 6000]	ft [m]
Low Limit Airflow Cutoff	LLIMIT	0 FPM	0 to 500 FPM [0.0 to 2.5 m/s]	
Area	AREA	*{Null}* requires entry	0.00 to 9999.99 [0.000 to 999.999]	sq ft [sq m]
Convert Airflow to Pressure	DPCONVERT	NO	YES	
Uni- or Bi-directional Output	DIRECTION	BI	UNI	
AO1 and AO2 Type	AOUT	2-10V	0-10V, 0-5 V	
AO1 Assignment	AO1 ASGN	AF (Airflow)	None	
AO1 Unit of Measure	AO1 UM	FPM [m/s]	CFM [L/s]	
AO1 Minimum Scale Reading	AO1 MS	-3000 [-15.0]	None	FPM [m/s]
AO1 Full Scale Reading	AO1 FS	3000 [15.0]	100 to 15000 [0.5 to 75.0]	FPM [m/s]
AO2 Assignment	AO2 ASGN	TEMP (Temperature)	ALRM (Alarm) or TRBL (System Trouble)	
AO2 Unit of Measure	AO2 UM	F [C]	None	°F [°C]
AO2 Minimum Scale Reading	AO2 MS	-20 [-30]	-50 to 160 [-50 to 70]	°F [°C]
AO2 Full Scale Reading	AO2 FS	160 [70]	-50 to 160 [-50 to 70]	°F [°C]

Refer to the O&M Manual for more information and/or additional parameter defaults, settings and ranges.

STARTUP INSTRUCTIONS:

1. The bleed sensor measures airflow and direction through a 1/2 inch diameter pipe having 1/2 inch NPT female threads on both ends.
2. Verify that the bleed sensor is mounted with the airflow arrow pointing in the direction of airflow for unidirectional applications and in the positive direction of airflow for bidirectional applications..
3. Verify that the transmitter is installed and wired in accordance with the *EF-A2000-B Wiring Guide* provided with the transmitter and power is provided to the transmitter.
4. Energize power to the transformer. Power-up faults, if detected, are displayed on the LCD. If any power up faults are detected, resolve all conflicts or contact EBTRON customer service at 1-800-232-8766 before proceeding..

⚠ *If extension cables have been added, the extension cable length must be entered into the transmitter. Refer to the Operations and Maintenance Manual for more information.*

5. The transmitter is fully functional as a factory calibrated airflow and temperature measurement device in I-P units (ft, FPM, CFM °F). Bidirectional airflow (FPM) and temperature (°F) are displayed on the LCD.

ⓘ *If SI units are required, refer to the the Operations and Maintenance Manual.*

ⓘ *The factory default airflow output is set to actual airflow (FPM, CFM). If standard (mass) airflow (SFPM, SCFM) is required, refer to the Operations and Maintenance Manual.*

6. The bleed sensor can be configured for bi– or uni-directional measurement. If uni-directional airflow is desired continue to step 7, otherwise skip to step 8.
7. To change from bidirectional to unidirectional measurement, press the ↑↓ arrow buttons simultaneously to enter the MAIN MENU. The SETTINGS menu is displayed. Press the ENT button to select the top of the SETTINGS submenu category. Press the ↓ button until the GENERAL submenu category is visible. Press the ENT button to enter the GENERAL submenu. Press the ↓ button until the DIRECTION parameter is visible. Press the ENT button and set the DIRECTION parameter to UNI using the ↑↓ buttons. Press the ENT button to save the selection. Press the ESC button twice to return no normal operation.
8. If the bleed sensor is used to estimate the total airflow though an opening, continue to step 9, otherwise skip to step 14.
9. Configure the bleed sensor for unidirectional measurement as directed in step 7.
10. Manually enter the free area of the opening where the bleed sensor is mounted in the transmitter. Press the ↑↓ arrow buttons simultaneously to enter the MAIN MENU. The SETTINGS menu is displayed. Press the ENT button to select the top of the SETTINGS submenu category. Press the ↓ button until the GENERAL submenu category is visible. Press the ENT button to enter the GENERAL submenu. Press the ↓ button until the AREA parameter is visible. Press the ENT button and set the AREA parameter using the ↑↓ buttons. Press the ENT button to save the area. Continue to step 11 before returning to normal operation.
11. Change the LCD to display CFM. Press the ESC button to return to the SETTINGS submenu category. Press the ↓ button until the LCD submenu category is visible. Press the ENT button to enter the LCD submenu. Press the ↓ button until the LCD UM parameter is visible. Press the ENT button and set the LCD UM parameter to CFM using the ↑↓ buttons. Press the ENT button to save the selection. Press the ESC button twice to return no normal operation.
12. Use the flow adjust wizard (FAW) to calibrate the bleed sensor to a reliable airflow reference measurement.

13. Press the ↑↓ arrow buttons simultaneously to enter the MAIN MENU. The SETTINGS menu is displayed. Press the ↓ button until the TOOLS menu category is visible. Press the ENT button to select the top of the TOOLS submenu category. Press the ↓ button until the FAW tool is visible. Press the ENT button to execute the tool. Choose a one or two point adjustment. Follow the prompts. Select "YES" when the SAVE prompt is displayed. The transmitter returns to normal operation with the adjustments calculated saved and enabled. Refer to the *Operations and Maintenance Manual* for more information.
14. If the bleed sensor is used to estimate the differential pressure between two adjacent spaces, continue to step 15, otherwise skip to step 17.
15. To change from airflow to pressure measurement, press the ↑↓ arrow buttons simultaneously to enter the MAIN MENU. The SETTINGS menu is displayed. Press the ENT button to select the top of the SETTINGS submenu category. Press the ↓ button until the GENERAL submenu category is visible. Press the ENT button to enter the GENERAL submenu. Press the ↓ button until the DPCONVERT parameter is visible. Press the ENT button and set the DPCONVERT parameter to YES using the ↑↓ buttons. Press the ENT button to save the selection. Press the ESC button twice to return to normal operation.

⚠ *The bleed airflow sensor is not a pressure sensor. Pressure is calculated using a nominal value for the assembly's flow coefficient without additional tubing and the output pressure is approximate. The addition of tubing changes the flow coefficient. To improve the accuracy of the pressure measurement manually calculate gain and offset coefficients using a high-performance pressure measuring device as a reference. Enter the coefficients manually in the transmitter and enable field adjustment. Refer to the Operations and Maintenance Manual for more information.*

17. If analog output signals are used continue to step 18, otherwise skip to step 22.
18. The output signal type and range (2-10 VDC, 0-5 VDC or 0-10 VDC) of AO1 and AO2 is determined by the AOUT parameter. The transmitter is factory set to 2-10V (i.e. AOUT=2-10V).

ⓘ *The VDC output circuit can drive the input circuit of devices designed to measure 4-wire current loops with a resistive load ≥250 ohms.*

⚠ *Do not apply any excitation voltage to the output of the transmitter.*

19. Verify that the transmitter is configured to match the analog input requirements of the host controller. Press the ESC and ↑ buttons simultaneously to display the transmitter setting for the AOUT parameter. If the AOUT parameter is not correct, press the ENT button and use the ↑ and ↓ buttons to set AOUT. Press the ENT button to execute and display the change. Press the ESC button to return to normal operation.
20. The analog output signal for airflow (AO1) is linear. If the bleed sensor is configured for unidirectional measurement, the minimum scale reading (0% output) of the airflow signal is fixed at 0 and the full scale reading (100% output) is factory set to 3,000 FPM if DPCONVERT=NO or 1.5 iWG if DPCONVERT=YES. If the bleed sensor is configured for bidirectional measurement, the minimum scale reading (0% output) of the airflow signal is fixed at the negative full scale reading.

Multiply the default full scale velocity (FPM) by the correct total area (i.e. AREA parameter) of the measurement location to determine the full-scale or span (CFM) for the B.A.S. to avoid additional field configuration when volumetric airflow measurement is desired. EBTRON airflow measurement device accuracy is percent-of-reading. Changing the full scale reading does not affect measurement accuracy.

ⓘ *If custom scaling or unit of measure are required, refer to the Operations and Maintenance Manual.*

21. The analog output signal for temperature (AO2) is linear. The minimum scale reading (0% output) is set to -20 ºF and full scale reading (100% output) is set to 160 ºF.

ⓘ *If custom temperature scaling is required, refer to the Operations and Maintenance Manual.*

ⓘ *AO2 can be configured for a high/low airflow alarm or system status alarm. Refer to the Operations and Maintenance Manual for more information.*

22. If contact closure alarming is required continue to step 23, otherwise skip to step 25.
23. The contact closure relay can be assigned to the high/low airflow (or pressure if DPCONVERT=YES) alarm or system status alarm. Refer to the *Operations and Maintenance Manual* for more information on configuring the high/low airflow alarm..
24. Press the ↑↓ arrow buttons simultaneously to enter the MAIN MENU. The SETTINGS menu is displayed. Press the ENT button to select the top of the SETTINGS submenu category. Press the ↓ button until the RELAY submenu category is visible. Press the ENT button to enter the RELAY submenu. The R1ASGN parameter is visible. Press the ENT button and set the R1 ASGN parameter to ALRM (high/low airflow alarm) or TRBL (System Status Alarm) using the ↑↓ buttons. Press the ENT button to save the selection. The default state for the relay is normally open (N.O.). If N.O. is required, press the ESC button twice to return to normal operation. If N.C. is required, press the ↓ button until the R1 STATUS parameter is visible. Press the ENT button and set the R1 STATUS parameter to NC. Press the ENT button to save the selection. Press the ESC button twice to return to normal operation.
25. Startup is complete! If additional customization is desired, consult the *Operation and Maintenance Manual*.

FOR MORE INFORMATION ….

Operations and Maintenance Manual.

The *Operations and Maintenance Manual* is a comprehensive reference document that contains information on installation, startup, custom configuration, built-in tools, diagnostics, troubleshooting and maintenance.

NEED MORE HELP?

EBTRON Customer Service

For toll-free factory support call 1-800-2EBTRON (1-800-232-8766), Monday through Thursday 8:00 AM to 4:30 PM and Friday 8:00 AM to 2:00 PM eastern time.

Your Local EBTRON Representative

Visit EBTRON.com for the name and contact information of your local representative.

EB-FlowII EF-N2000-B STARTUP GUIDE

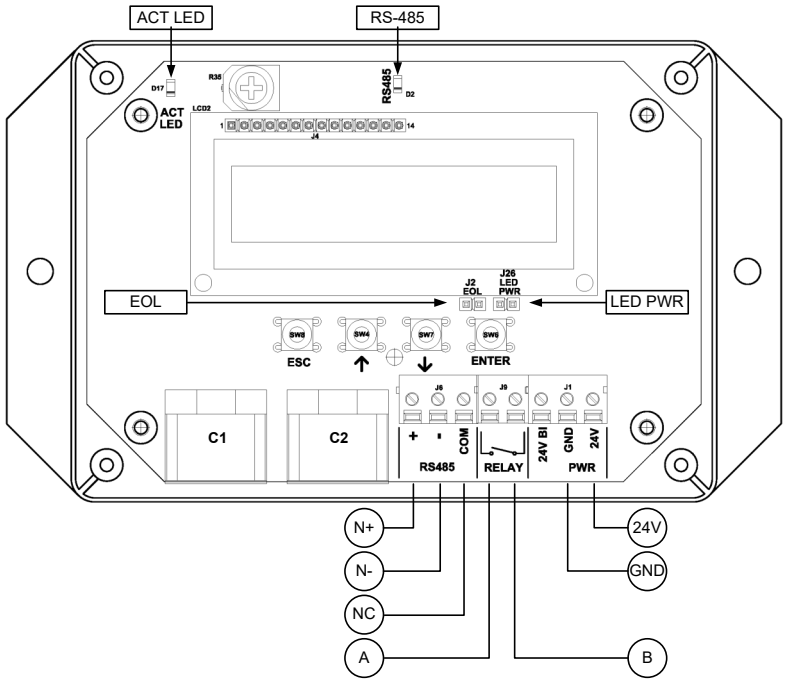

EF-N2000-B Parameters - Factory Defaults and Optional Settings/Ranges

Description	Parameter	Default	Optional Settings/Ranges	Units
System of Units	SYS	I-P (US customary)	SI (metric)	
Airflow Calculation Method	AIRFLOW	ACT (actual)	STD (standard mass flow)	
Altitude (for actual flow correction)	ALT	0	0 to 20000 [0 to 6000]	ft [m]
Low Limit Airflow Cutoff	LLIMIT	0 FPM	0 to 500 FPM [0.0 to 2.5 m/s]	
Area	AREA	*{Null}* requires entry	0.00 to 9999.99 [0.000 to 999.999]	sq ft [sq m]
Convert Airflow to Pressure	DPCONVERT	NO	YES	
Uni- or Bi-directional Output	DIRECTION	BI	UNI	
RS-485 Network	BACnet MS/TP or Modbus RTU (requires configuration)			

Refer to the O&M Manual for more information and/or additional parameter defaults, settings and ranges.

STARTUP INSTRUCTIONS:

1. The bleed sensor measures airflow and direction through a 1/2 inch diameter pipe having 1/2 inch NPT female threads on both ends.
2. Verify that the bleed sensor is mounted with the airflow arrow pointing in the direction of airflow for unidirectional applications and in the positive direction of airflow for bidirectional applications..
3. Verify that the transmitter is installed and wired in accordance with the *EF-N2000-B Wiring Guide* provided with the transmitter and power is provided to the transmitter.
4. Energize power to the transformer. Power-up faults, if detected, are displayed on the LCD. If any power up faults are detected, resolve all conflicts or contact EBTRON customer service at 1-800-232-8766 before proceeding..

⚠ *If extension cables have been added, the extension cable length must be entered into the transmitter. Refer to the Operations and Maintenance Manual for more information.*

5. The transmitter is fully functional as a factory calibrated airflow and temperature measurement device in I-P units (ft, FPM, CFM °F). Bidirectional airflow (FPM) and temperature (°F) are displayed on the LCD.

ⓘ *If SI units are required, refer to the the Operations and Maintenance Manual.*

ⓘ *The factory default airflow output is set to actual airflow (FPM, CFM). If standard (mass) airflow (SFPM, SCFM) is required, refer to the Operations and Maintenance Manual.*

6. The bleed sensor can be configured for bi– or uni-directional measurement. If uni-directional airflow is desired continue to step 7, otherwise skip to step 8.
7. To change from bidirectional to unidirectional measurement, press the ↑↓ arrow buttons simultaneously to enter the MAIN MENU. The SETTINGS menu is displayed. Press the ENT button to select the top of the SETTINGS submenu category. Press the ↓ button until the GENERAL submenu category is visible. Press the ENT button to enter the GENERAL submenu. Press the ↓ button until the DIRECTION parameter is visible. Press the ENT button and set the DIRECTION parameter to UNI using the ↑↓ buttons. Press the ENT button to save the selection. Press the ESC button twice to return no normal operation.
8. If the bleed sensor is used to estimate the total airflow though an opening, continue to step 9, otherwise skip to step 14.
9. Configure the bleed sensor for unidirectional measurement as directed in step 7.
10. Manually enter the free area of the opening where the bleed sensor is mounted in the transmitter. Press the ↑↓ arrow buttons simultaneously to enter the MAIN MENU. The SETTINGS menu is displayed. Press the ENT button to select the top of the SETTINGS submenu category. Press the ↓ button until the GENERAL submenu category is visible. Press the ENT button to enter the GENERAL submenu. Press the ↓ button until the AREA parameter is visible. Press the ENT button and set the AREA parameter using the ↑↓ buttons. Press the ENT button to save the area. Continue to step 11 before returning to normal operation.
11. Change the LCD to display CFM. Press the ESC button to return to the SETTINGS submenu category. Press the ↓ button until the LCD submenu category is visible. Press the ENT button to enter the LCD submenu. Press the ↓ button until the LCD UM parameter is visible. Press the ENT button and set the LCD UM parameter to CFM using the ↑↓ buttons. Press the ENT button to save the selection. Press the ESC button twice to return no normal operation.
12. Use the flow adjust wizard (FAW) to calibrate the bleed sensor to a reliable airflow reference measurement.

13. Press the ↑↓ arrow buttons simultaneously to enter the MAIN MENU. The SETTINGS menu is displayed. Press the ↓ button until the TOOLS menu category is visible. Press the ENT button to select the top of the TOOLS submenu category. Press the ↓ button until the FAW tool is visible. Press the ENT button to execute the tool. Choose a one or two point adjustment. Follow the prompts. Select "YES" when the SAVE prompt is displayed. The transmitter returns to normal operation with the adjustments calculated saved and enabled. Refer to the *Operations and Maintenance Manual* for more information.
14. If the bleed sensor is used to estimate the differential pressure between two adjacent spaces, continue to step 15, otherwise skip to step 16.
15. To change from airflow to pressure measurement, press the ↑↓ arrow buttons simultaneously to enter the MAIN MENU. The SETTINGS menu is displayed. Press the ENT button to select the top of the SETTINGS submenu category. Press the ↓ button until the GENERAL submenu category is visible. Press the ENT button to enter the GENERAL submenu. Press the ↓ button until the DPCONVERT parameter is visible. Press the ENT button and set the DPCONVERT parameter to YES using the ↑↓ buttons. Press the ENT button to save the selection. Press the ESC button twice to return to normal operation.

⚠ *The bleed airflow sensor is not a pressure sensor. Pressure is calculated using a nominal value for the assembly's flow coefficient without additional tubing and the output pressure is approximate. The addition of tubing changes the flow coefficient. To improve the accuracy of the pressure measurement manually calculate gain and offset coefficients using a high-performance pressure measuring device as a reference. Enter the coefficients manually in the transmitter and enable field adjustment. Refer to the Operations and Maintenance Manual for more information.*

16. If the RS-485 network connection is required continue to step 17, otherwise skip to step 19.
17. Press the ↑↓ arrow buttons simultaneously to enter the MAIN MENU. The SETTINGS menu is displayed. Press the ENT button to select the top of the SETTINGS submenu category. Press the ↓ button until the RS-485 submenu category is visible. Press the ENT button to enter the RS-485 submenu. The NET OUT parameter is visible. Press the ENT button and set the NET OUT parameter to BACNET (BACnet MS/TP) or MODBUS (Modbus RTU). Press the ENT button to save the selection. Use the ↓ arrow button and continue through the RS-485 submenu to configure the remaining network parameters. Enable network communications by setting the RS485 COM parameter to "ON" and press the ENT button. Press the ESC button twice to return to normal operation.
18. Refer to the *A4 Operations and Maintenance Manual* for detailed information on the BACnet Objects and Modbus Registers supported by this device.
19. If contact closure alarming is required continue to step 20, otherwise skip to step 22.
20. The contact closure relay can be assigned to the high/low airflow (or pressure if DPCONVERT=YES) alarm or system status alarm. Refer to the *Operations and Maintenance Manual* for more information on configuring the high/low airflow alarm..
21. Press the ↑↓ arrow buttons simultaneously to enter the MAIN MENU. The SETTINGS menu is displayed. Press the ENT button to select the top of the SETTINGS submenu category. Press the ↓ button until the RELAY submenu category is visible. Press the ENT button to enter the RELAY submenu. The R1ASGN parameter is visible. Press the ENT button and set the R1 ASGN parameter to ALRM (high/low airflow alarm) or TRBL (System Status Alarm) using the ↑↓ buttons. Press the ENT button to save the selection. The default state for the relay is normally open (N.O.). If N.O. is required, press the ESC button twice to return to normal operation. If N.C. is required, press the ↓ button until the R1 STATUS parameter is visible. Press the ENT button and set the R1 STATUS parameter to NC. Press the ENT button to save the selection. Press the ESC button twice to return to normal operation.
22. Startup is complete! If additional customization is desired, consult the *Operation and Maintenance Manual*.

FOR MORE INFORMATION ….

Operations and Maintenance Manual.

The *Operations and Maintenance Manual* is a comprehensive reference document that contains information on installation, startup, custom configuration, built-in tools, diagnostics, troubleshooting and maintenance.

NEED MORE HELP?

EBTRON Customer Service

For toll-free factory support call 1-800-2EBTRON (1-800-232-8766), Monday through Thursday 8:00 AM to 4:30 PM and Friday 8:00 AM to 2:00 PM eastern time.

Your Local EBTRON Representative

Visit EBTRON.com for the name and contact information of your local representative.

Appendix F
Network Registers and Object Lists

TABLE F-1 Modbus Register Map

ⓘ Modbus RTU, TCP specific network register map. All registers are always readable; values are based on the connected sensors and transmitter type. A value of -9999 is returned for registers not applicable to a transmitter or sensor type.

Address	Function	Type	Name	Product Line	Probe Type	Special Criteria	Units	Ranges
10001	2	boolean	Trouble Status	All	All			0:OK, 1:Trbl
30001-30002	4	float	AMD[-1] Airflow	All	All		FPM	0 to 15,000
30003-30004	4	float	AMD[-1] Temperature	All	All		°F	-50 to 160
30005-30006	4	float	RH	Advantage IV	-P w /H option		% RH	0 - 100
30007-30008	4	float	Dewpoint	Advantage IV	-P w /H option		°F	-50 to 160
30009-30010	4	float	Enthalpy	Advantage IV	-P w /H option		Btu/lb	-20 to 400
30011-30012	4	float	AMD Pressure	All	-B		iWC	-5 to 5
30013-30014	4	float	AMD-2 Airflow	All	-P, -T, -U, -F	Dual location	FPM	0 to 15,000
30015-30016	4	float	AMD-2 Temperature	All	-P, -T, -U, -F	Dual location	°F	-50 to 160
30017-30018	4	float	Node 1 Velocity	All	All		FPM	0 to 15,000
30019-30020	4	float	Node 1 Temperature	All	All		°F	-50 to 160
…			…					
30077-30078	4	float	Node 16 Velocity	All	All		FPM	0 to 15,000
30079-30080	4	float	Node 16 Temperature	All	All		°F	-50 to 160
30081-30082	4	float	Fan 1 Velocity	Advantage IV	-F/An		FPM	0 to 15,000
…			…					
30095-30096	4	float	Fan 8 Velocity	Advantage IV	-F/An		FPM	0 to 15,000
30097-30098	4	float	Fan 1 Temperature	Advantage IV	-F/An		°F	-50 to 160
…			…					
30111-30112	4	float	Fan 8 Temperature	Advantage IV	-F/An		°F	-50 to 160
30113-30114	4	float	AMD[-1] Area	All	All		sq ft	0 to 10,000
30115-30116	4	float	AMD-2 Area	All	-P, -U, -T, -F	Dual location	sq ft	0 to 10,000
30117-30118	4	float	Fan 1 Flow	Advantage IV	-F/An		CFM	0 to 999,999
…			…					
30131-30132	4	float	Fan 8 Flow	Advantage IV	-F/An		CFM	0 to 999,999

TABLE F-1 Modbus Register Map

Address	Function	Type	Name	Product Line	Probe Type		Units	Ranges
30201	4	word	Alarm Status	All	All			0: No Alarm 1: High Alarm 2: Low Alarm 3: Both
30202	4	word	Fans In Alarm	Advantage IV	-F/An			
30203	4	word	Nodes	All	All			0 to 16
30204	4	word	Fans	Advantage IV	-F/An			0 to 8
30205	4	word	P1 Nodes	All	All			0 to 8
30206	4	word	P2 Nodes	All	All			0 to 8
30207	4	word	P3 Nodes	Advantage IV	All			0 to 4
30208	4	word	P4 Nodes	Advantage IV	All			0 to 4
30209	4	word	P5 Nodes	Advantage IV	-F			0 to 1
30210	4	word	P6 Nodes	Advantage IV	-F			0 to 1
30211	4	word	P7 Nodes	Advantage IV	-F			0 to 1
30212	4	word	P8 Nodes	Advantage IV	-F			0 to 1
30301	4	word	Float Word Order	All	All			0: High Word First 1: Low Word First
30401	4	word	Main PCB Firmware	All	All			
30402	4	word	Output Card Firmware	Advantage IV	All			

TABLE F-2 BACnet Object List

ⓘ BACnet MS/TP, BACnet IP, and BACnet Ethernet specific network object table. All objects are conditionally available based on the connected sensors and transmitter type.

	Type, ID	Name	Product Line	Probe Type	Special Criteria	Units	Writeable Properties	Restrictions/Ranges
DEVICE	Device, 2	{Product Name}	All	All			Object Name	< 22 characters
							Description	< 22 characters
							Location	Populated from transmitter NAME
							Object Identifier	< 4,194,303
							APDU Timeout	< 65535
							Max Master	≤ 127
							Max Info Frames	≤ 255
ANALOG INPUTS	AI, 1	AMD[-1] Airflow	All	All		FPM, CFM [m/s, L/s]	COV Increment	> 0
							Out of Service	Set out-of-service to write present value
							Present Value	
							Units	FPM, CFM [m/s, L/s]
	AI, 2	AMD[-1] Temperature	All	All		°F [°C]	COV Increment	> 0
							Out of Service	Set out-of-service to write present value
							Present Value	
							Units	°F [°C]
	AI, 3	AMD Pressure	All	-B		iWG [Pa]	COV Increment	> 0
							Out of Service	Set out-of-service to write present value
							Present Value	
							Units	iWG [Pa]
	AI, 4	AMD Alarm Status	All	All			Out of Service	Set Out of Service to write present value
							Present Value	0=No Alarm, 1=High Alarm, 2= Low Alarm, 3=Both
	AI, 5	AMD Fan Alarm Status	Advantage IV	-F/An			Out of Service	Set Out of Service to write present value
							Present Value	0=No alarm, 1=Alarm
	AI, 11	AMD-2 Airflow	All	-P, -U, -T, -F	Dual location		COV Increment	> 0
							Out of Service	Set out-of-service to write present value
							Present Value	
							Units	FPM, CFM [m/s, L/s]
	AI, 12	AMD-2 Temperature	All	-P, -U, -T, -F	Dual location		COV Increment	> 0
							Out of Service	Set out-of-service to write present value
							Present Value	
							Units	°F [°C]

TABLE F-2 BACnet Object List

	Type, ID	Name	Product Line	Probe Type	Special Criteria	Units	Writeable Properties	Restrictions/Ranges
ANALOG INPUTS	AI, 21	RH	Advantage IV	-P w /H option		% RH	COV Increment	> 0
							Out of Service	Set Out of Service to write present value
							Present Value	
	AI, 22	Dew Point	Advantage IV	-P w /H option		°F [°C]	COV Increment	> 0
							Out of Service	Set out-of-service to write present value
							Present Value	
							Units	°F [°C]
	AI, 23	Enthalpy	Advantage IV	-P w /H option		Btu/lb [kJ/kg]	COV Increment	> 0
							Out of Service	Set out-of-service to write present value
							Present Value	
							Units	Btu/lb [kJ/kg]
ANALOG VALUES	AV, 1	AMD[-1] Area	All	All		sq ft [sq m]		
	AV, 2	Fan 1 Area	Advantage IV	-F/An	GTM116e/GTM108e output card FW 4.17 and later or GTC116e/GTC108e FW 8.33 and later	sq ft [sq m]		Objects will only be populated up to the total fan count.
	…	…						
	AV, 9	Fan 8 Area						
	AV, 10	Traverse Status	All	All			Present Value	0=Off, 1=Flow, 2=Temp, 3=Both
	AV, 21	Node 1 Velocity	All	All	Must be enabled in AV10	FPM [m/s]		Objects will only be populated up to the total node count.
	…	…						
	AV, 36	Node 16 Velocity						
	AV, 41	Node 1 Temperature	All	All	Must be enabled in AV10	°F [°C]		Objects will only be populated up to the total node count.
	…	…						
	AV, 56	Node 16 Temperature						
	AV, 101	Fan 1 Flow	Advantage IV	-F/An		CFM, FPM [L/S, m/s]		Objects will only be populated up to the total fan count
	…	…						
	AV, 108	Fan 8 Flow						
	AV, 111	Fan 1 Temperature	Advantage IV	-F/An		°F [°C]		Objects will only be populated up to the total fan count
	…	…						
	AV, 118	Fan 8 Temperature						

TABLE F-2 BACnet Object List

	Type, ID	Name	Product Line	Probe Type	Special Criteria	Units	Writeable Properties	Restrictions/Ranges
Network Port	NP1	Network Port	Advantage IV	All	GTM116e/GTM108e output card FW 4.17 and later or GTC116e/GTC108e FW 8.33 and later		GTM116e/GTM108e: BACnet IP Mode Foreign Device BBMD Address Foreign Device Subscription Lifetime GTC116e/GTC108e: Max Master Max Info Frames	

NOTE: All objects are conditionally accessible based on the connected sensors and transmitter type.

TABLE F-3 Lon Network Variable Map

ⓘ Lon network output specific network object table. Support only for single location transmitters.

	Variable Name	Product Line	Probe Type	Variable Type	Measurement	Type	Units	Resolution
AIRFLOW SENSOR	*Objects*							
	nvoAirVel	Advantage IV	All	SNVT_speed_mil	Velocity Airflow	Unsigned Long	m/s	0.001
	nvoAirFlow			SNVT_flow	Volumetric Airflow	Unsigned Long	L/s	1
	nvoAirFlow_1		-F/An	SNVT_flow	Volumetric Airflow	Unsigned Long	L/s	1
	…							
	nvoAirFlow_8			SNVT_flow	Volumetric Airflow	Unsigned Long	L/s	1
	nvoAirFlowFl		All	SNVT_flow_f	Volumetric Airflow	Float	L/s	n/a
	Configuration Properties							
	nvoAirVel	Advantage IV	All	SCPTmaxSendTime	Time	Signed Long	s	0.1
	nvoAirVel			SCPTminSendTime	Time	Signed Long	s	0.1
	nvoAirVel			SCPminDelta	Velocity Airflow	Unsigned Long	m/s	0.001
PRESSURE SENSOR	*Objects*							
	nvoPrecisePres	Advantage IV	-B	SNVT_press_p	Pressure	Signed Long	Pa	1
	nvoFloatPres			SNVT_press_f	Pressure	Float	Pa	n/a
	Configuration Properties							
	nvoPrecisePres	Advantage IV	All	SCPTmaxSendTime	Time	Signed Long	s	0.1
	nvoPrecisePres			SCPTminSendTime	Time	Signed Long	s	0.1
	nvoPrecisePres			SCPTsndDelta	Pressure	Signed Long	Pa	0.0001
TEMPERATURE SENSOR	*Objects*							
	nvoTemp	Advantage IV	All	SNVT_temp_p	Temperature	Signed Long	°C	0.01
	nvoTemp_1		-F/An	SNVT_temp_p	Temperature	Signed Long	°C	0.01
	…			…	…	…	…	…
	nvoTemp_8			SNVT_temp_p	Temperature	Signed Long	°C	0.01
	Configuration Properties							
	nvoTemp	Advantage IV	All	SCPTmaxSendTime	Time	Signed Long	s	0.1
	nvoTemp			SCPTminSendTime	Time	Signed Long	s	0.1
	nvoTemp			SCPTminDeltaTemp	Temperature	Signed Long	°C	0.001

TABLE F-3 Lon Network Variable Map

	Variable Name	Product Line	Probe Type	Variable Type	Measurement	Type	Units	Resolution
PSYCHROMETRICS	*Objects*							
	nvoDewPoint	Advantage IV	-P w /H option	SNVT_temp_p	Temperature	Signed Long	°C	0.001
	nvoEnthalpy			SNVT_enthalpy	Enthalpy	Signed Long	kJ/kg	0.01
	nvoRH			SNVT_lev_percent	Relative Humidity	Signed Long	%	0.001
	Configuration Properties							
	nvoRH	Advantage IV	-P w /H option	SCPTmaxSendTime	Time	Signed Long	s	0.1
	nvoRH			SCPTminSendTime	Time	Signed Long	s	0.1
	nvoRH			SCPTminDeltaRH	Relative Humidity	Signed Long	%	0.001

NOTE: All objects are conditionally accessible based on the connected sensors and transmitter type.

Appendix G

Mechanical

Drawings

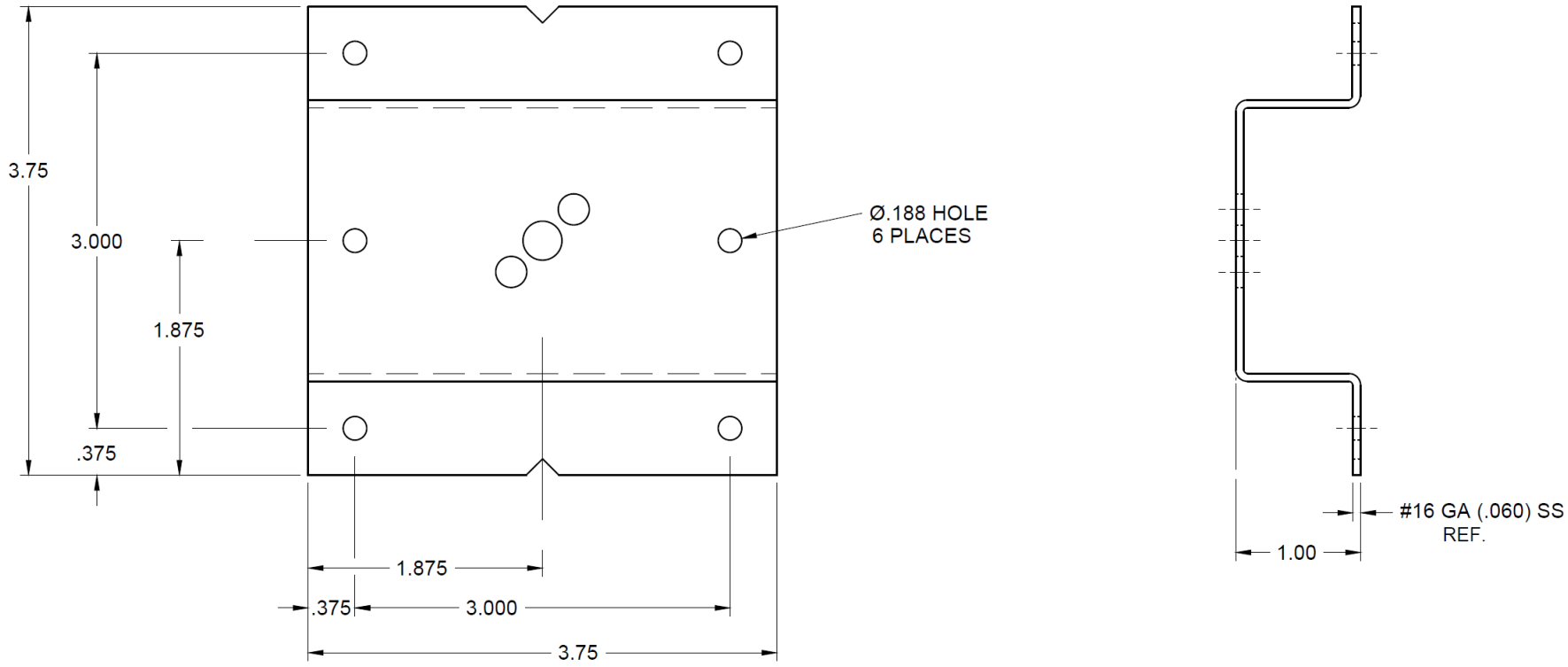

-P INSERTION PROBE MOUNTING BRACKET (NEW)

The NEW insertion probe mounting bracket will be provided on all non-OEM orders manufactured after (10/22/2020). OEM orders will be evaluated on a case-by-case basis. The new design has a smaller mounting footprint. Notches ensure proper probe alignment in the duct. Center-line mounting holes have been added for round duct installations. The size change allows the terminal end plate, when provided, to be used as a template to mark hole locations for the insertion side bracket of square and rectangular ducts. The bracket is constructed of 304 stainless steel.

EBTRON, Inc. 1663 Hwy. 701 S. Loris, SC 29569
Toll Free: 800-232-8766 FAX: 843-756-1838 Internet: EBTRON.com

TITLE:	INSERTION MOUNTING BRACKET		
PARENT:	B	X220-1129B	
SCALE: NONE	SHEET: 1 of 1	REVISION: R1C	

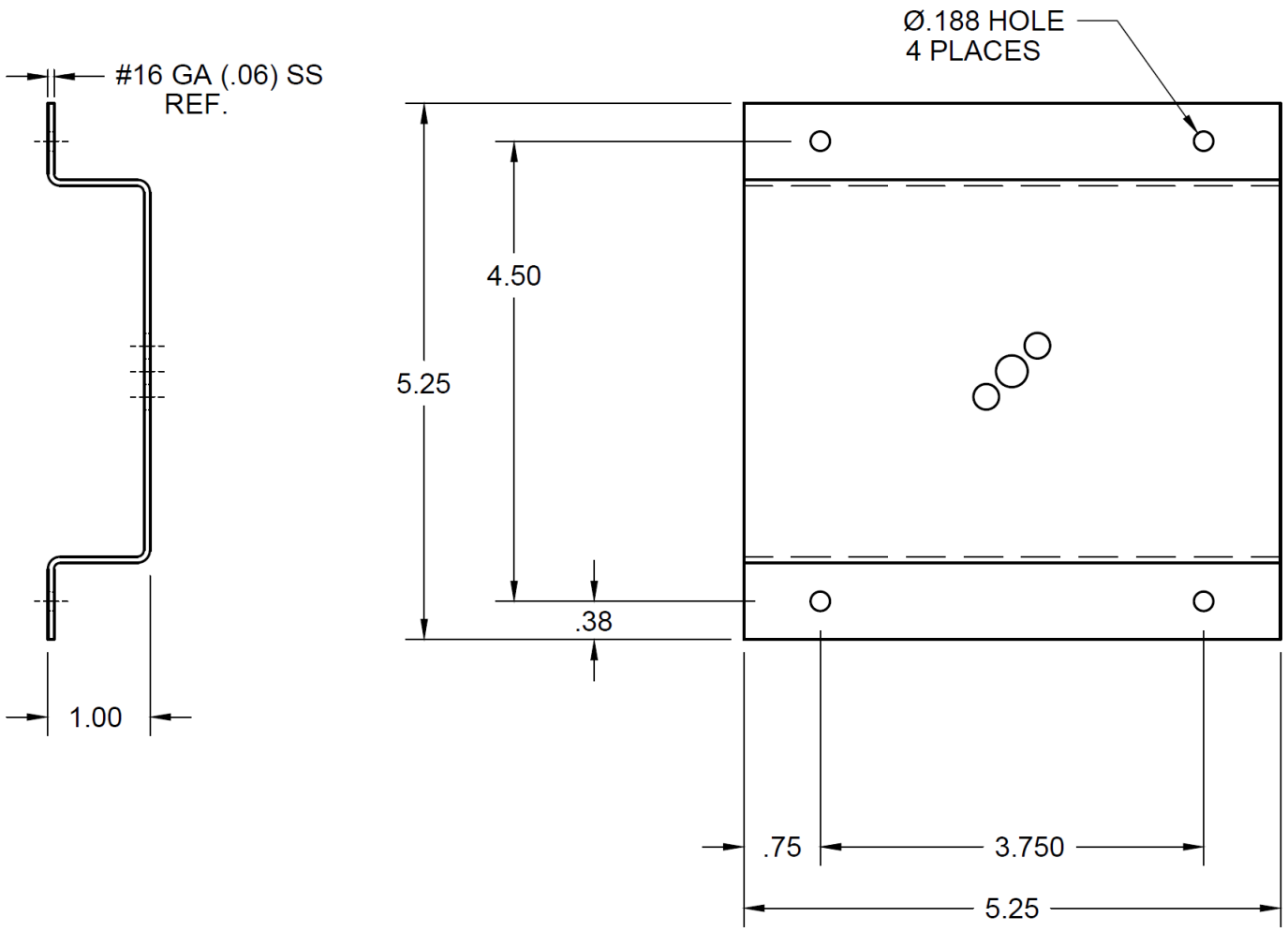

-P INSERTION PROBE MOUNTING BRACKET (OLD)

The OLD insertion probe mounting bracket is provided on all orders manufactured on or before (10/22/2020). The bracket will be used on all repairs manufactured with this bracket design until further notice. The bracket is constructed of 304 stainless steel.

EBTRON, Inc. 1663 Hwy. 701 S. Loris, SC 29569
Toll Free: 800-232-8766 FAX: 843-756-1838 Internet: EBTRON.com

TITLE:	INSERTION MOUNTING BRACKET		
PARENT:	B	X220-1129A	
SCALE: NONE	SHEET: 1 of 1	REVISION: R1D	

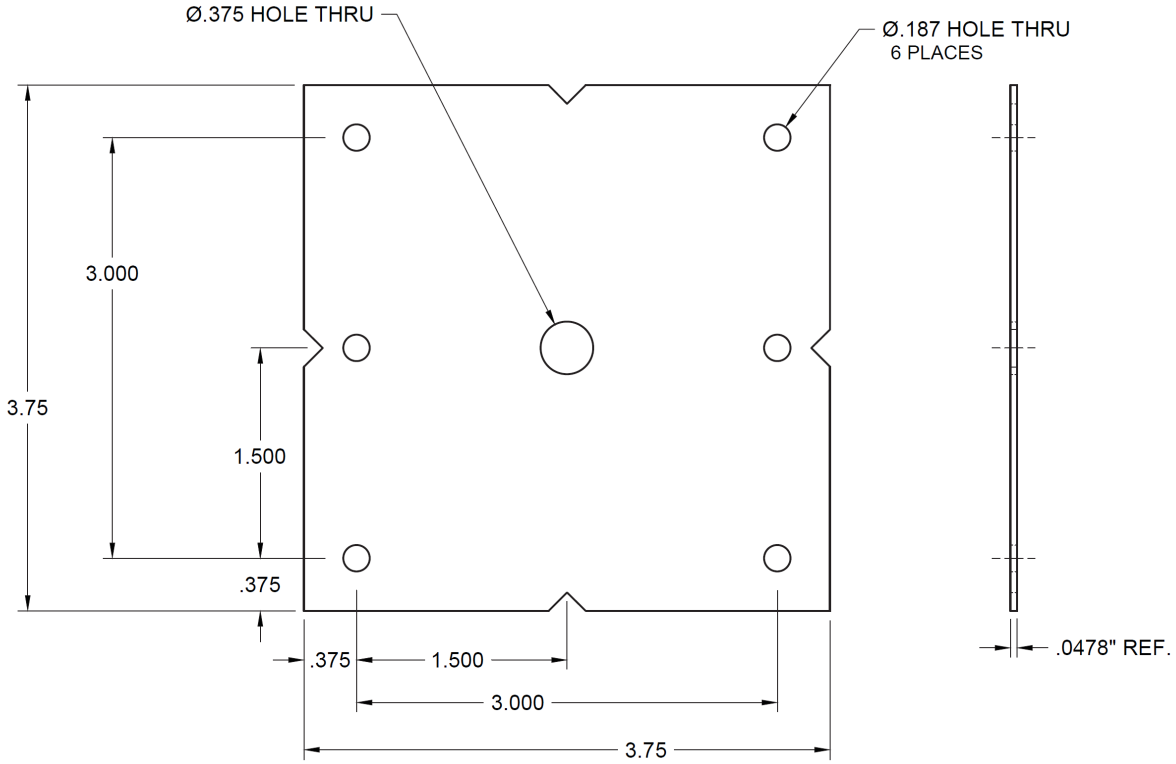

-P INSERTION PROBE TERMINAL END PLATE (NEW)

The NEW insertion probe terminal end plate will be provided on all non-OEM orders ≥ 18 inches manufactured after (10/08/2020). OEM orders will be evaluated on a case-by-case basis. Notches ensure proper alignment in the duct. The terminal end plate can be used as a template to mark hole locations for the insertion side bracket of square and rectangular ducts. The bracket is constructed of 304 stainless steel.

EBTRON, Inc. 1663 Hwy. 701 S. Loris, SC 29569
Toll Free: 800-232-8766 FAX: 843-756-1838 Internet: EBTRON.com

TITLE:	TERMINAL END PLATE		
PARENT:	A	X220-1168B	
SCALE: NONE	SHEET: 1 of 1	REVISION: R1C	

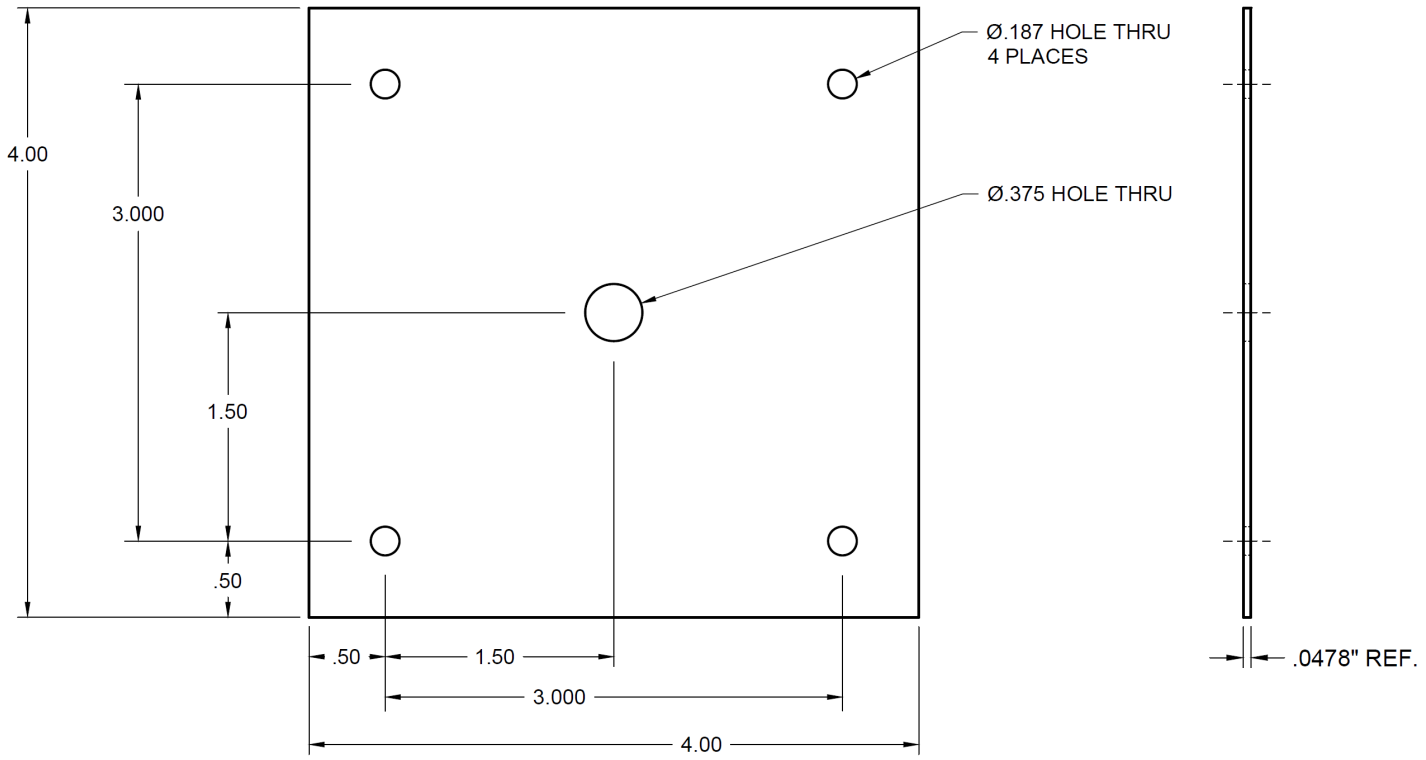

-P INSERTION PROBE TERMINAL END PLATE (OLD)

The OLD insertion probe terminal end plate is provided on all orders ≥ 18 inches manufactured on or before (10/08/2020). The bracket will be used on all repairs manufactured with this bracket design until further notice. The bracket is constructed of 304 stainless steel.

EBTRON, Inc. 1663 Hwy. 701 S. Loris, SC 29569
Toll Free: 800-232-8766 FAX: 843-756-1838 Internet: EBTRON.com

TITLE:	TERMINAL END PLATE		
PARENT:	**A**	X220-1168A	
SCALE: NONE	**SHEET:** 1 of 1	**REVISION:** R1D	

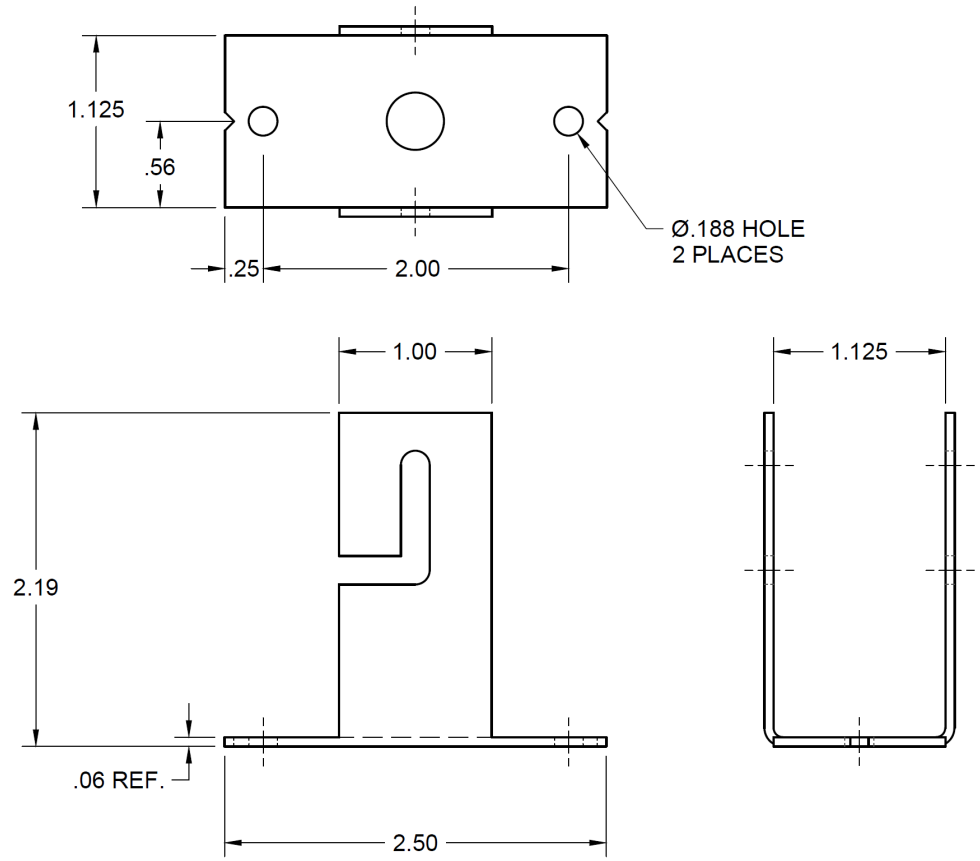

-P INTERNAL PROBE MOUNTING BRACKET (NEW)

The NEW internal probe mounting bracket will be provided on all non-OEM orders manufactured after (11/12/2020). OEM orders will be evaluated on a case-by-case basis. The new design simplifies installation by allowing for the mounting brackets to be installed with the probe(s) removed, Notches in the bracket ensure prober probe alignment in the duct or opening. Brackets are constructed of 304 stainless steel. Two brackets are provided with each internal mount probe.

EBTRON, Inc. 1663 Hwy. 701 S. Loris, SC 29569
Toll Free: 800-232-8766 FAX: 843-756-1838 Internet: EBTRON.com

TITLE:	INTERNAL SLOTTED BRACKET		
PARENT:	A	X220-1139A	
SCALE: NONE	SHEET: 1 of 1	REVISION: R1C	

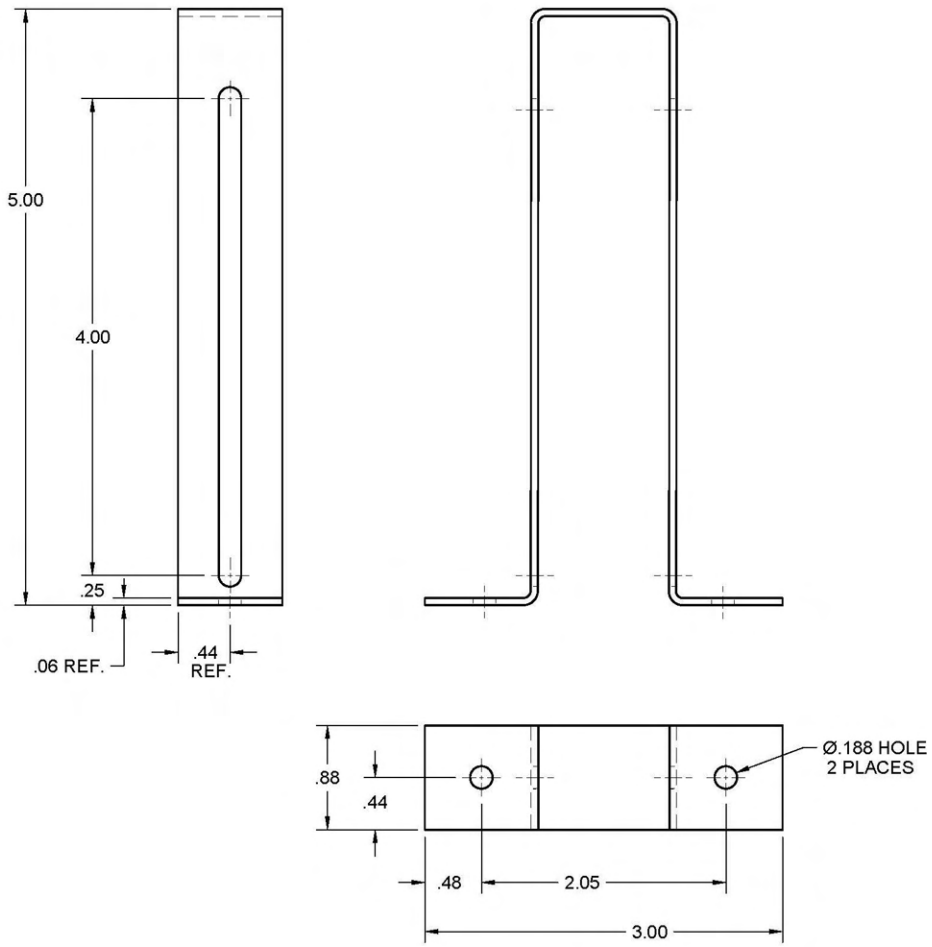

-P STANDOFF PROBE MOUNTING BRACKET

Brackets are constructed of 304 stainless steel. Two brackets are provided with each standoff mount probe.

EBTRON, Inc. 1663 Hwy. 701 S. Loris, SC 29569
Toll Free: 800-232-8766 FAX: 843-756-1838 Internet: EBTRON.com

TITLE:	STANDOFF BRACKET		
PARENT:	A X220-1134		
SCALE: NONE	SHEET: 1 of 1	REVISION: R1A	

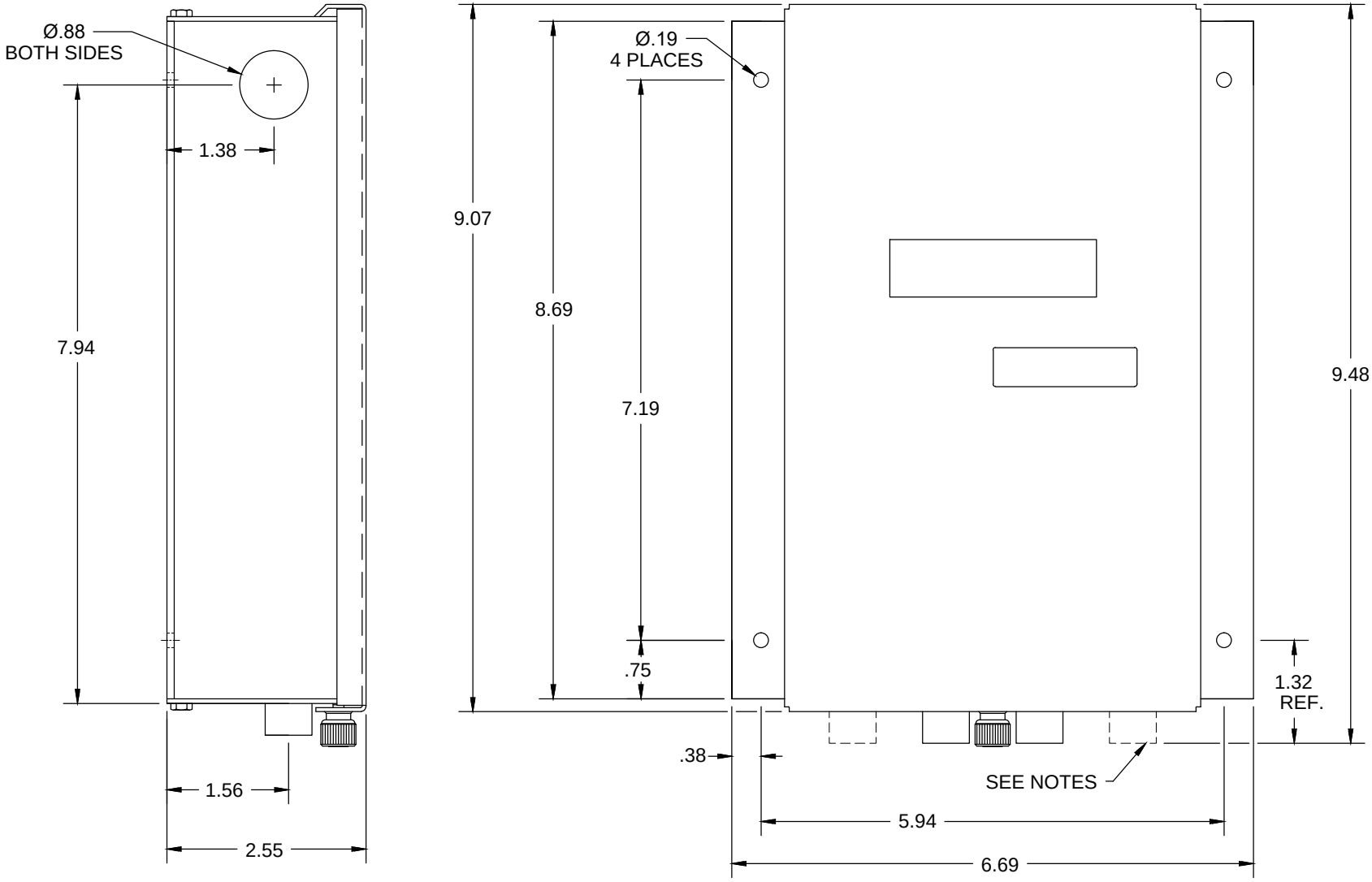

Advantage IV GTx116/GTx116e TRANSMITTER

Type "A" transmitter has 2 probe receptacles. Type "B" transmitter has 4 probe receptacles. Provide a minimum of 3 inches below transmitter to connect cable plugs from the sensor probes. Provide a minimum of 1.5 inches above transmitter to allow for hinged cover removal. The transmitter enclosure is constructed of 6063 / 5052 aluminum.

EBTRON, Inc. 1663 Hwy. 701 S. Loris, SC 29569
TEL: 843 756-1828 FAX: (843)756-1838 www.ebtron.com

TITLE: GTx116/GTx116e TRANSMITTER			
PARENT:	A	P001-0001H	
SCALE: NONE	SHEET: 1 of 1	REVISION: R1B	

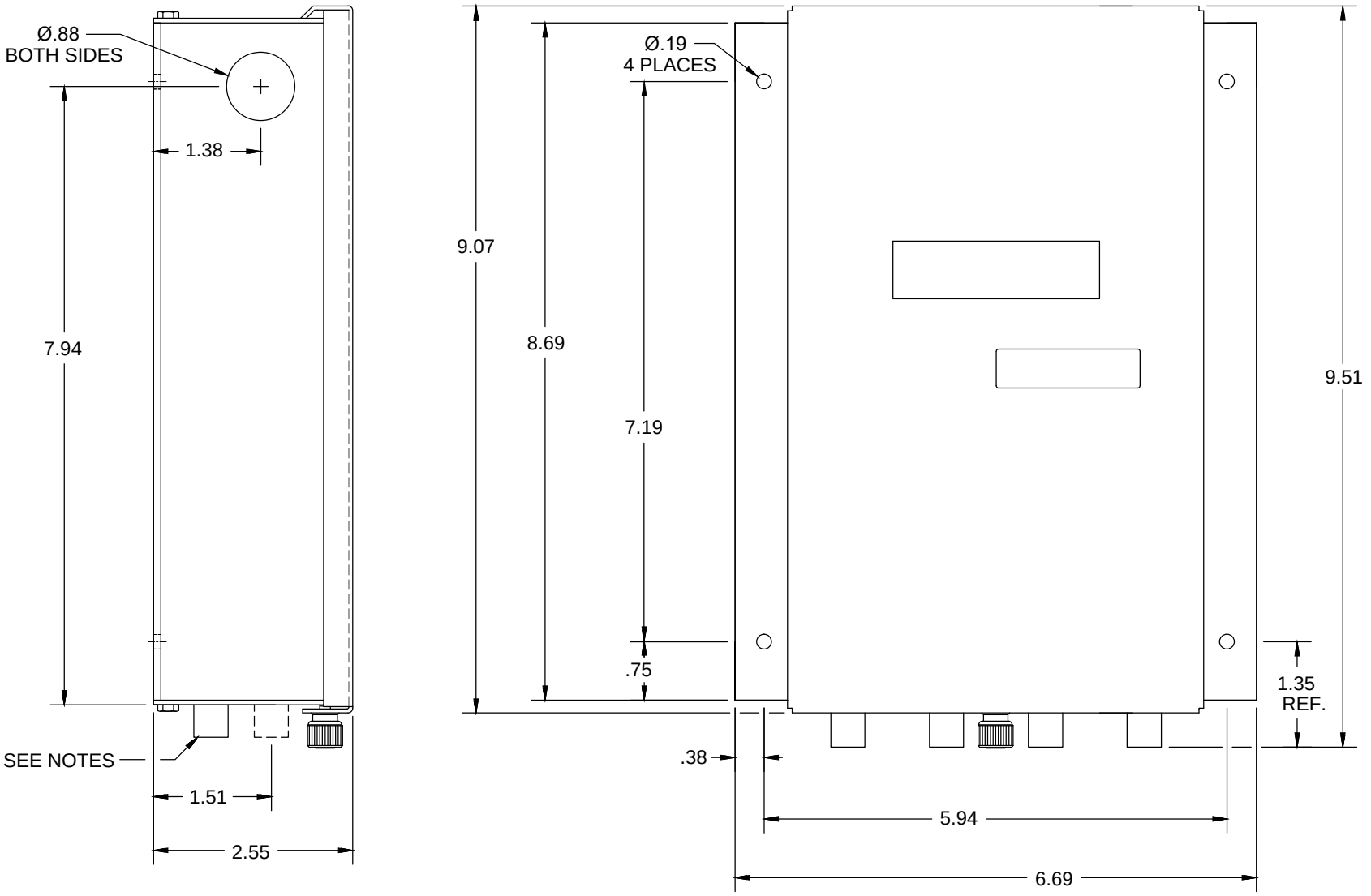

Advantage IV GTx108/GTx108e TRANSMITTER

Type "B" transmitter has 4 probe receptacles. Type "C" transmitter has 8 probe receptacles. Provide a minimum of 3 inches below transmitter to connect cable plugs from the sensor probes. Provide a minimum of 1.5 inches above transmitter to allow for hinged cover removal. The transmitter enclosure is constructed of 6063 / 5052 aluminum.

EBTRON, Inc. 1663 Hwy. 701 S. Loris, SC 29569
TEL: 843 756-1828 FAX: (843)756-1838 www.ebtron.com

TITLE:	GTx108/GTx108e TRANSMITTER
PARENT:	**A** P001-0006H
SCALE: NONE	SHEET: 1 of 1
REVISION: R1B	

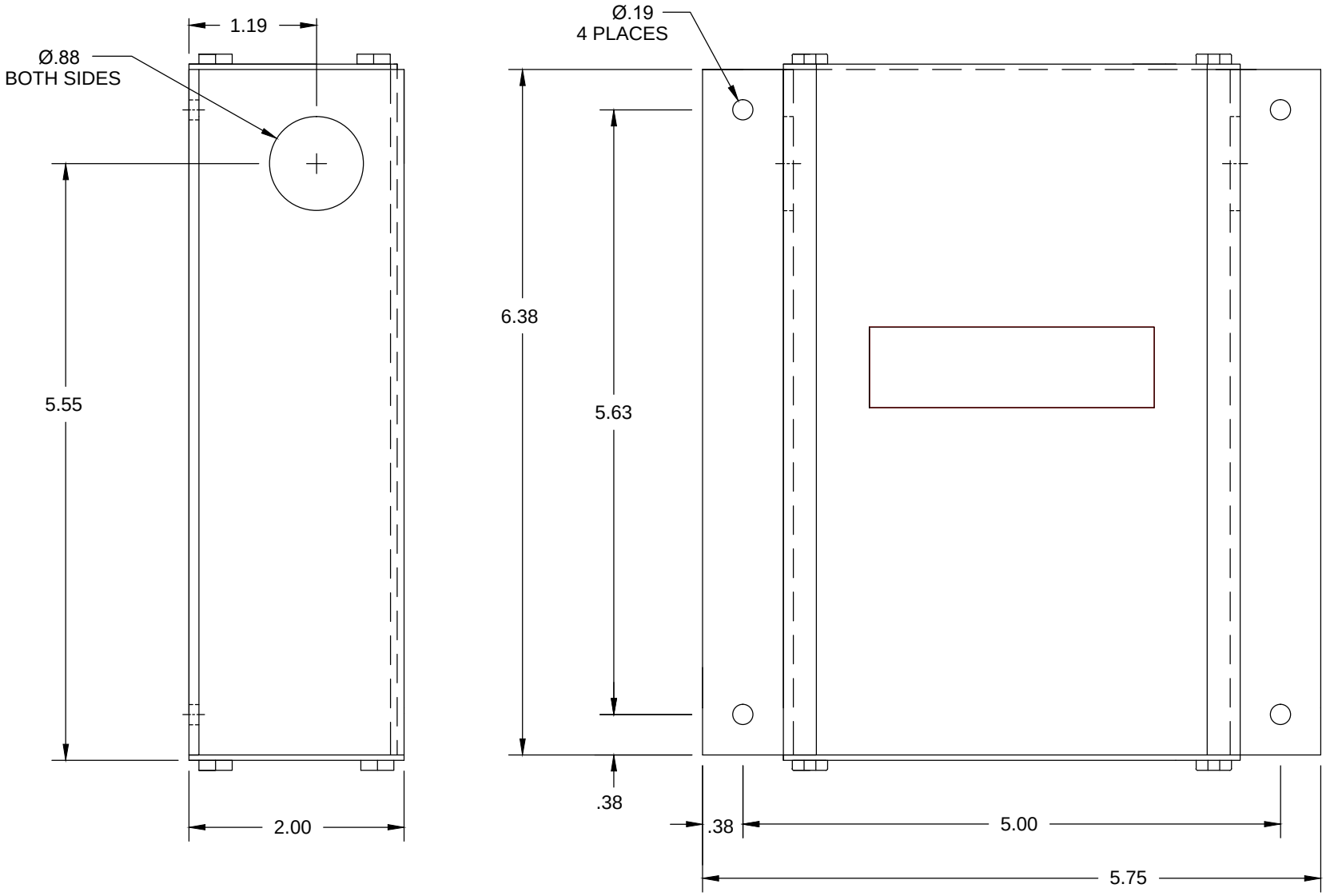

Advantage IV HTx104 TRANSMITTER

Type "A" transmitter has a 1 probe receptacle. Type "B" transmitter has 2 probe receptacles. Type "C" transmitter has 4 probe receptacles. Provide a minimum of 3 inches below transmitter to connect cable plugs from the sensor probes. Provide a minimum of 6.5 inches above transmitter to allow for slide out cover removal. The transmitter enclosure is constructed of 6063 / 5052 aluminum.

EBTRON, Inc. 1663 Hwy. 701 S. Loris, SC 29569
TEL: 843 756-1828 FAX: (843)756-1838 www.ebtron.com

TITLE: HTx104 TRANSMITTER			
PARENT:	A P002-0001		
SCALE: NONE	SHEET: 1 of 1	REVISION: R1B	

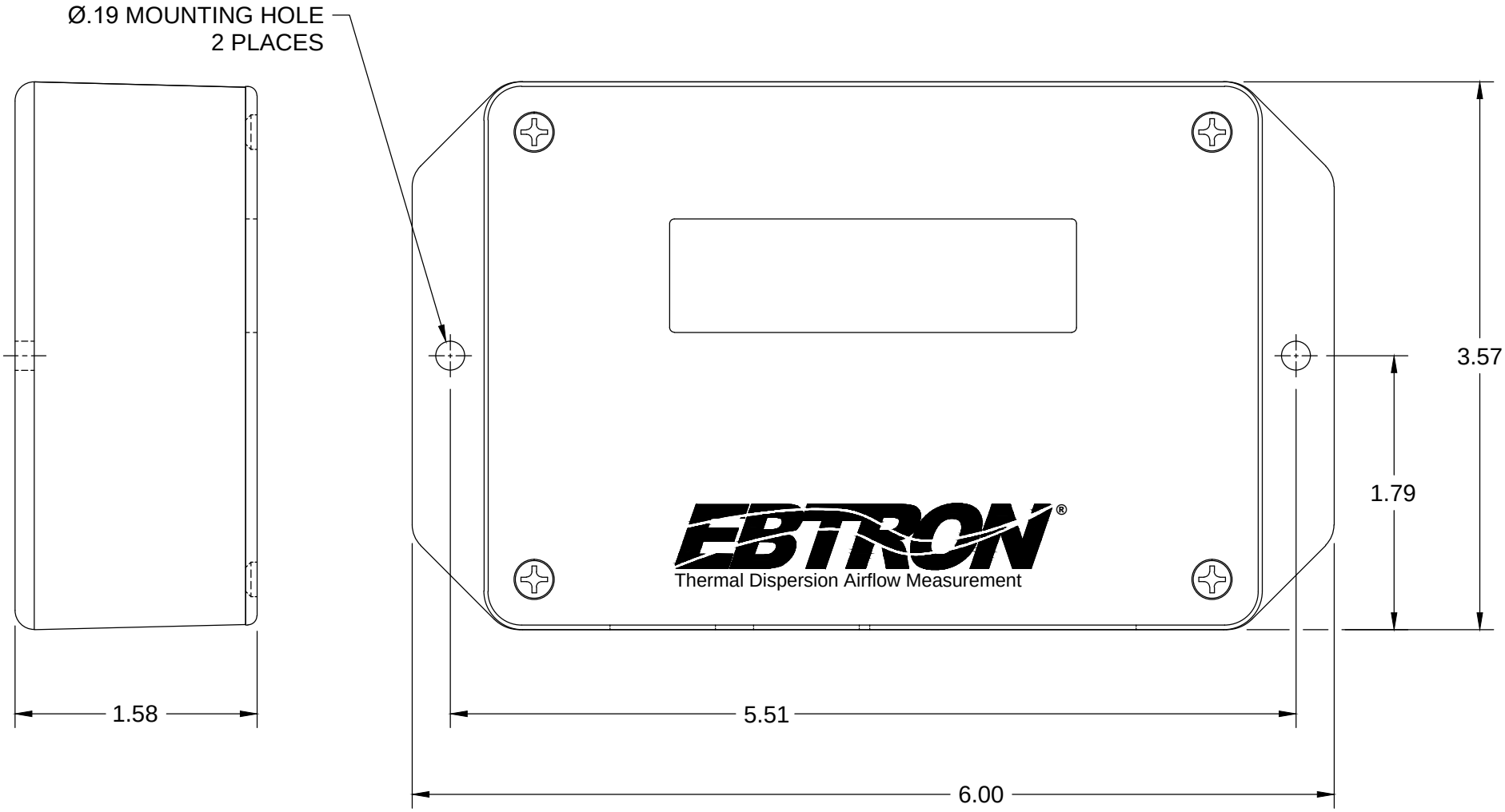

EB-Flowll EF-x2000 TRANSMITTER

Provide a minimum of 3 inches below transmitter to connect cable plugs from the sensor probes. The transmitter enclosure is constructed of flame retardant ABS plastic with flame rating: enclosure base: UL94 V-0, cover: UL94-5VA.

EBTRON®
EBTRON, Inc. 1663 Hwy. 701 S. Loris, SC 29569
TEL: 843 756-1828 FAX: (843)756-1838 www.ebtron.com

TITLE: EF-x2000 TRANSMITTER			
PARENT:	A	P200-1133-1	
SCALE: NONE	SHEET: 1 of 1	REVISION: R1B	